DRAWING MADE IN THIRD ANGLE PROJECTION

THIS DRAWING IS UNPUBLISHED. | RELEASED FOR PUBLICATION ,19

© COPYRIGHT 19 BY AMP INCORPORATED. ALL INTERNATIONAL RIGHTS RESERVED.

LOC	DIST
AG	53

P	F	ZONE	LTR	DESCRIPTION	DATE	APPD
			P	REVISED PER 0440-0185-97	9-11-97	RT
			R	REV PER 051D-0084-00	17JUL00	KW

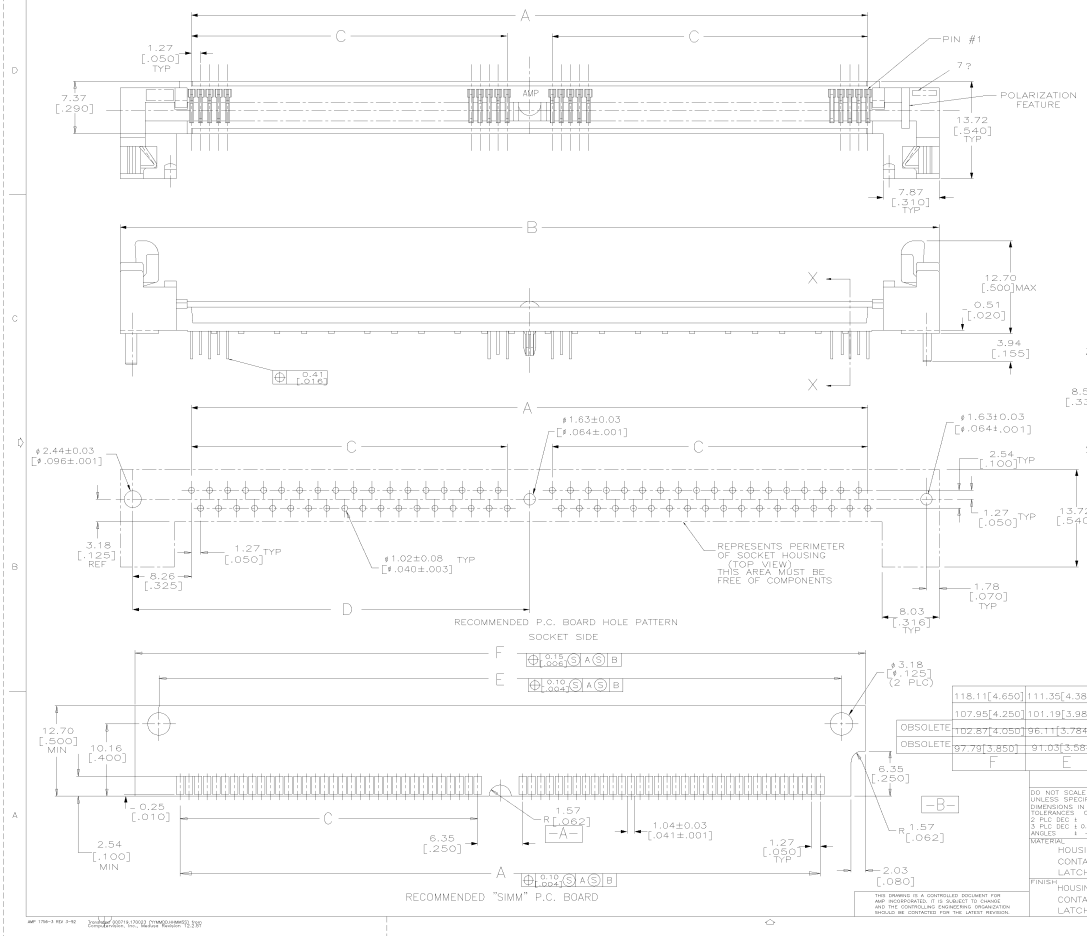

1. HOUSING-MATERIAL : LIQUID-CRYSTAL-POLYMER.
2. CONTACT-MATERIAL : PHOS. BRONZE.
3. LATCH-MATERIAL : STAINLESS STEEL
4. CONTACT-PLATE: 0.00508[.000200] MIN. TIN/LEAD OVER 0.00127 [.000050] MIN NICKEL.
5. IN ADDITION TO THOSE RECOMMENDED "SIMM" P.C. BOARD DIMENSIONS AND TOLERANCES SHOWN, ALL JEDEC SPECIFICATIONS APPLY AS SHOWN ON MO-116, ISSUE A.
6. RECOMMENDED MATING S.I.M.M. TAB METALLURAGY: BASE METAL-COPPER. PLATING TO BE 0.00762[.000300] MIN TIN/LEAD OVER 0.00127[.000050] MIN NICKEL.
7. ? 'S' IDENTIFIER LOCATED APPROXIMATELY AS SHOWN.

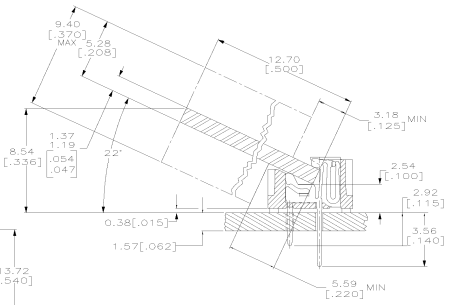

SECTION X-X
SCALE 5:1
(BOARD SHOWN FOR REF ONLY)

	F	E	D	C	B	A	NO. OF POS	PART NO
	118.11[4.650]	111.35[4.384]	60.96[2.400]	49.53[1.950]	125.48[4.940]	105.41[4.150]	80	822134-4
	107.95[4.250]	101.19[3.984]	55.88[2.200]	44.45[1.750]	115.32[4.540]	95.25[3.750]	72	822134-3
OBSOLETE	102.87[4.050]	96.11[3.784]	53.34[2.100]	41.91[1.650]	110.24[4.340]	90.17[3.550]	68	822134-2
OBSOLETE	97.79[3.850]	91.03[3.584]	50.80[2.000]	39.37[1.550]	105.16[4.140]	85.09[3.350]	64	822134-1

PART NO

DO NOT SCALE PRINT. UNLESS SPECIFIED DIMENSIONS IN mm [INCHES] TOLERANCES ON : 2 PLC DEC ± 3 PLC DEC ± 0.13[.005] ANGLES ± -

MATERIAL: HOUSING... 1 CONTACT... 2 LATCH..... 3

FINISH: HOUSING... NATURAL CONTACT... 4 LATCH..... 5

DR 2-15-91 K.SAUKH
CHK 2-18-91 R.MILLER
APPD 2-18-91 J.LAMBERT
APPD 2-18-91 E.MCCARTHY
PRODUCT SPEC –
APPLICATION SPEC –
WEIGHT –

AMP Incorporated
Harrisburg, PA 17105-3608

NAME
CONNECTOR, MICRO-EDGE, .050, LP, TIN PL, W/METAL LATCH

SIZE D | CAGE CODE 00779 | DRAWING NO C-822134
SCALE 4:1 | SHEET 1 OF 1

THIS DRAWING IS A CONTROLLED DOCUMENT FOR AMP INCORPORATED. IT IS SUBJECT TO CHANGE AND THE PROPERTYLING ENGINEERING ORGANIZATION SHOULD BE CONTACTED FOR THE LATEST REVISION.

AMP 1766-3 REV 3-92 Template 2001k.13003 (YMMDD:HHMM)(1.330 Conversion, Inc., Master Revision 15.33)

CUSTOMER DRAWING

Downloaded from Elcodis.com electronic components distributor