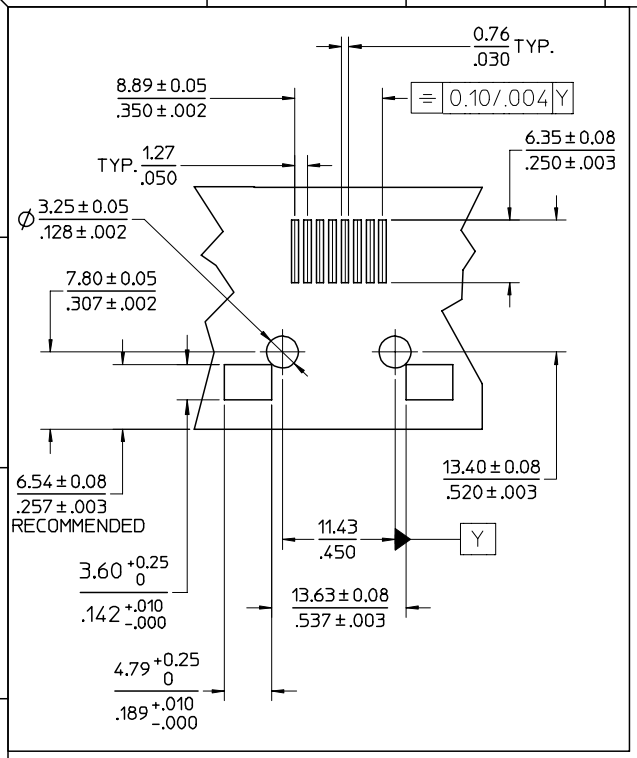

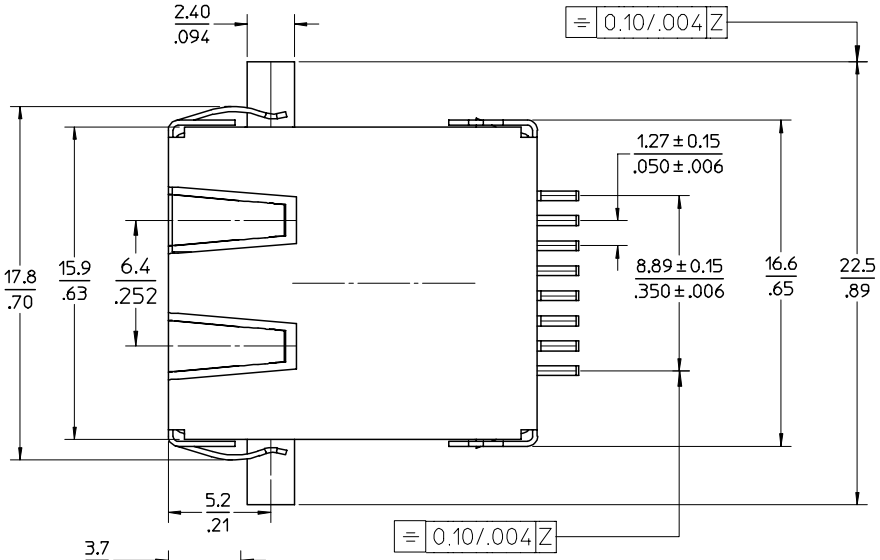

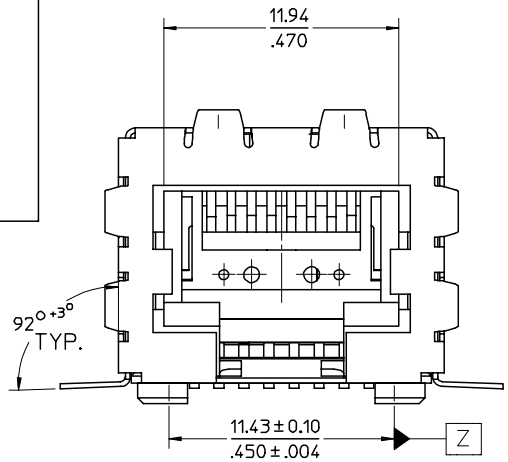

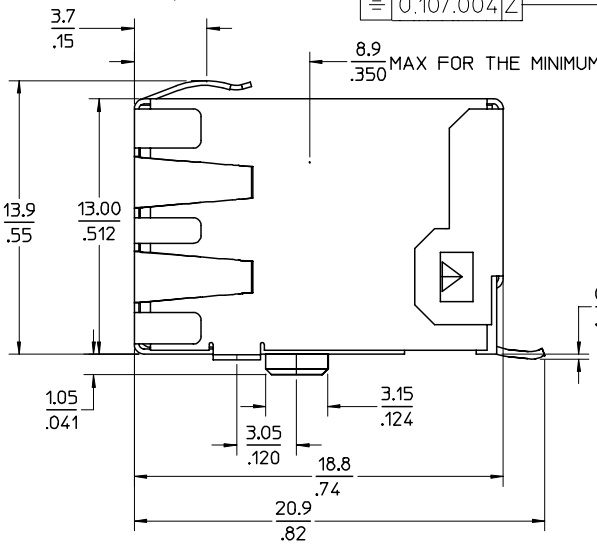

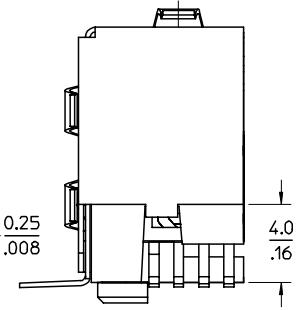

PARTIAL1
Scale 4:1

NOTES:
1- JACK FOR MATING WITH SHIELDED PLUG (MOLEX 95043 SERIES)
2- PRODUCT SPECIFICATION: PS-95122 AND PS-85505 (SECTION 5.2)
3- APPLICATION SPECIFICATION: AS-95001
4- PACKAGING SPECIFICATION: PK-85542-002 9bLISTER ON REEL)
5- COPLANARITY OF SIGNAL LEADS: 0.10 MAX
6- EXCEEDS CATEGORY 5E PERFORMANCE.

TECHNICAL SPECIFICATIONS:
MATERIAL:
HOUSING: POLYAMIDE GLASS FILLED UL 94V0, COLOUR BLACK.
TERMINAL: PHOSPHOR BRONZE PLATED WITH: 0.00127/.000050 MIN GOLD IN CONTACT AREA, 0.00190/.000075 MIN PURE TIN IN TAIL AREA, BOTH OVER 0.00127/.000050 MIN NICKEL OVERALL.
SHIELD: BRASS PLATED WITH 0.0020/.000078 MIN TIN.

CREATED MODELS	EC NO: E2006-0814	DRWN:DBYRNES	2006/04/06
		CHKD:	2006/04/06
		APPR:EOMAHONY	2006/04/11
DESCRIPTION			
REV	A		

QUALITY SYMBOLS
▼=0
▽C=0

GENERAL TOLERANCES (UNLESS SPECIFIED)

	mm	INCH
4 PLACES	± ---	± ---
3 PLACES	± ---	± .010
2 PLACES	± 0.25	± .014
1 PLACE	± 0.35	± ---
ANGULAR ± 2 °		

DRAFT WHERE APPLICABLE MUST REMAIN WITHIN DIMENSIONS

DIMENSION STYLE: MM ONLY	SCALE: 4:1	DESIGN UNITS: METRIC	THIRD ANGLE PROJECTION
DRAWN BY: FB	DATE: 1999/05/21	TITLE: HIGH SPEED RIGHT ANGLE FULLY SHIELDED MODULAR JACK(8-CIRCUIT)	
CHECKED BY: ER	DATE: 1999/08/21		
APPROVED BY: FB	DATE: 1999/05/21	molex MOLEX INCORPORATED	
MATERIAL NO.: 85543-0001		DOCUMENT NO.: SD-85543-001	SHEET NO.: 1 OF 1
SIZE: A3			

THIS DRAWING CONTAINS INFORMATION THAT IS PROPRIETARY TO MOLEX INCORPORATED AND SHOULD NOT BE USED WITHOUT WRITTEN PERMISSION