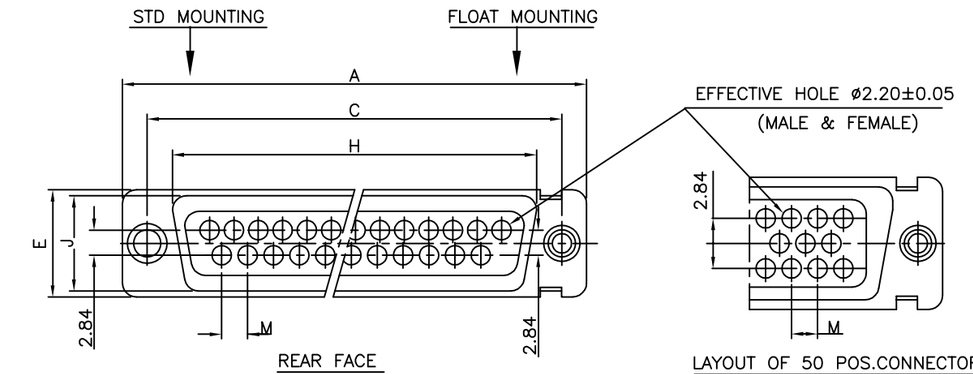

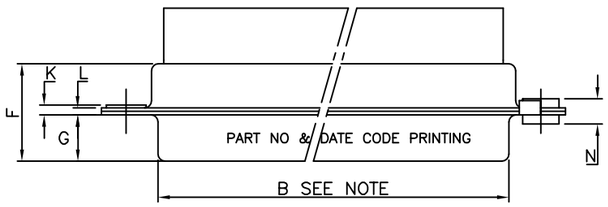

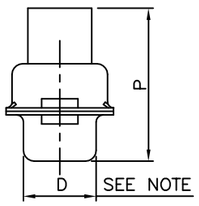

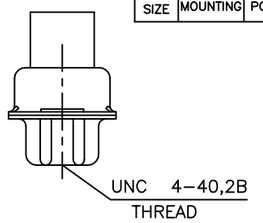

WITH FEMALE SCREW LOCK

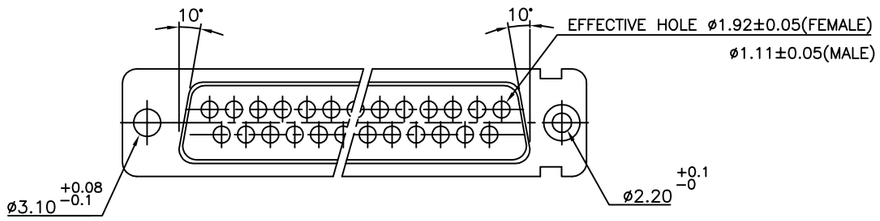

VIEW OF MATING FACE(FRONT)

SHELL SIZE	TYPE OF MOUNTING	MOUNTING POSITIONS	X±0.1	Y±0.1	R±0.1	S +0.1 −0	T±0.1
			DIMENSIONS				
50	STD	FRONT	58.30	15.80	61.11	3.20	2.10
		REAR	56.30	14.10	61.11	3.20	3.30
	FLOAT	FRONT	59.20	16.60	61.11	2.20	2.10
		REAR	57.20	14.40	61.11	2.20	3.30
37	STD	FRONT	60.70	13.00	63.50	3.20	2.10
		REAR	59.10	11.40	63.50	3.20	3.30
	FLOAT	FRONT	61.50	13.80	63.50	2.20	2.10
		REAR	59.80	12.20	63.50	2.20	3.30
25	STD	FRONT	44.30	13.00	47.04	3.20	2.10
		REAR	42.50	11.40	47.04	3.20	3.30
	FLOAT	FRONT	45.10	13.80	47.04	2.20	2.10
		REAR	43.30	12.20	47.04	2.20	3.30
15	STD	FRONT	30.50	13.00	33.32	3.20	2.10
		REAR	28.80	11.40	33.32	2.20	3.30
	FLOAT	FRONT	31.30	13.80	33.32	2.20	2.10
		REAR	29.60	12.20	33.32	2.20	3.30
09	STD	FRONT	22.20	13.00	24.99	3.20	2.10
		REAR	20.50	11.40	24.99	3.20	3.30
	FLOAT	FRONT	23.00	13.80	24.99	2.20	2.10
		REAR	21.30	12.20	24.99	2.20	3.30

TABLE 2

SHELL SIZE		+0.76 A−0	+0.25 B−0	+0.12 C−0	+0.25 D−0	+0.76 E−0	F MAX	+0.15 G−0	+0.51 H−0	+0.51 J−0	K±0.20	+0.22 L−0	M±0.06	NMAX	PMAX
50	P	66.65	52.68	61.11	11.08	14.99	11.09	5.85	55.07	13.31	1.50	1.0	2.76	3.05	17.35
	S	66.65	52.30	61.11	10.62	14.99	11.21	6.05	55.07	13.31	1.10	0.8	2.76	2.85	17.44
37	P	68.94	55.30	63.50	8.23	12.17	11.09	5.85	57.45	10.46	1.50	1.0	2.76	3.05	17.35
	S	68.94	54.71	63.50	7.77	12.17	11.21	6.05	57.45	10.46	1.10	0.8	2.76	2.85	17.44
25	P	52.65	38.84	47.04	8.23	12.17	11.07	5.85	41.02	10.46	1.10	0.8	2.76	2.85	17.35
	S	52.65	38.25	47.04	7.77	12.17	11.21	6.05	41.02	10.46	1.10	0.8	2.76	2.85	17.44
15	P	38.76	25.12	33.32	8.23	12.17	10.99	5.85	27.25	10.46	1.10	0.8	2.74	2.85	17.35
	S	38.76	24.54	33.32	7.77	12.17	11.21	6.05	27.25	10.46	1.10	0.8	2.74	2.85	17.44
09	P	30.43	16.79	24.99	8.23	12.17	10.99	5.85	19.02	10.46	1.10	0.8	2.74	2.85	17.35
	S	30.43	16.21	24.99	7.77	12.17	11.21	6.05	19.02	10.46	1.10	0.8	2.74	2.85	17.44

NOTE:–INSIDE DIM. OF MALE AND OUTSIDE DIM. OF THE FEMALE CONNECTOR.

ORDERING INFORMATION

8656 0 25 P L H T X XXX LF

- SERIES: 8656
- OPTIONS–1: 0
  - BLANK–STANDARD MOUNTING
  - O–CLINCH NUT (UNC)
  - L–CLINCH NUT (M3)
  - V–FEM. SCREW LOCK HEX. (UNC)
  - W–RIVETED FEM. SCREW LOCK ROUND UNC
  - N–THREADED FEM. SCREW LOCK M3
  - F–FLOAT MOUNTING
- NO.OF CONTACTS: 25
  - 09,15,25,37,50
- CONTACTS: P
  - P – PIN
  - S – SOCKET
- OPTIONAL: L
  - L–SUPPLIED W/O CONTACTS (OBLIGATORY)
- OPTIONS–2: H
  - BLANK–STD. W/O ACCESSORIES
  - H–SHIELDING TERMINATION FINGERS
- SHELL PLATING: T
  - BLANK–ZINC PLTG.
  - T–STD. TIN/Zinc Cr3 PLTG.
- DIMPLES: X
  - X–ON MALE CONNECTORS ONLY
- SPECIAL CODES: XXX
- LEAD FREE: LF

TECHNICAL SPECIFICATIONS

SHELLS	:	TIN/CADMIUM/ZINC PLATED STEEL
INSULATOR MATERIAL	:	SELF EXTINGUISHING THERMOPLASTIC– TO UL CLASS 94 V0
		THE HOUSING WILL WITHSTAND EXPOSURE TO 260–265°C
		IF WE USE PROTECTIVE ADHESIVE (type Kapton or Teflon)
		OR PROTECTIVE METALLIC DEVICE
CONTACTS DIA ON ACTIVE AREA	:	ø1 MM.
CONTACTS MATERIAL	:	COPPER ALLOY
CONTACT PLATING	:	GOLD OVER NICKEL (ACTIVE ZONE)
	:	TIN OVER NICKEL (TERMINATION ZONE)
FOR LEAD FREE PLATING	:	2 μ MIN.MATTE TIN TOP OVER
		1.27 μ MIN.NICKEL UNDER PLATE(ON TERMINATION ZONE)
OPERATING TEMPERATURE	:	–55°C TO +125°C
OPERATING CURRENT	:	5 A PER CONTACT
CONTACT RESISTANCE	:	⩽10mΩ
INSULATION RESISTANCE	:	>5000 MΩ IN AMBIENT CONDITIONS.
MAXIMUM VOLTAGE	:	1000 V.r.m.s
MECHANICAL ENDURANCE	:	200 MATINGS (Au FLASH)
DAMP HEAT	:	21 DAYS
WIRE SIZE	:	AWG 20/24 OR AWG 24/28
CONTACTS	:	CRIMP REMOVABLE
MAX DIA OF WIRE	:	1.52mm (AWG 20/24) 1.02mm (AWG 24/28)

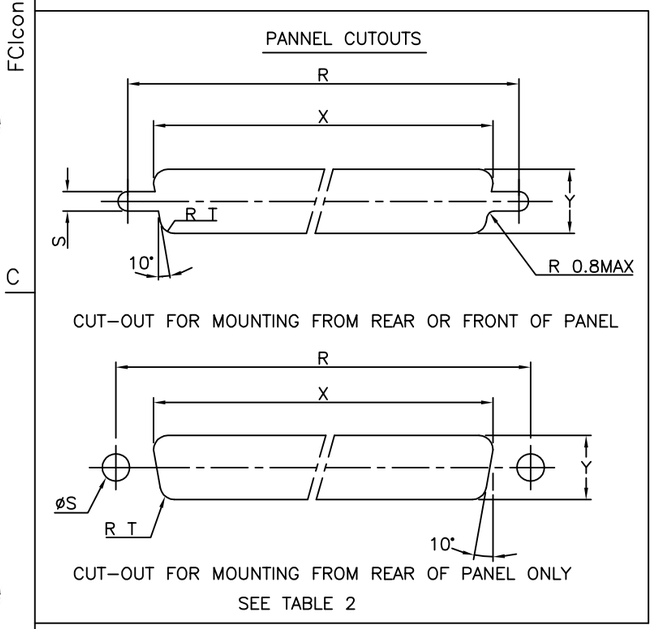

"This LF product meets European Union Directives and other country regulations as described in GS–22–008"

Packaging as per GS–14–920

mat'l. code				surface ISO 1302	tolerance ISO 406 ISO 1101	projection	product family
ltr	ecn no	dr	date	tolerances unless otherwise specified			title
E	i06–0074	GVJ	2006/06/08	angles	linear	MM	D-SUB CRIMP CONNECTOR
						scale –	
				dr	Mini K Vandanath	1999/03/20	dwg no C-DSUB-0071
				engr	George V Joseph	1999/03/20	sheet 1 of 1
				chr	George V Joseph	2006/06/23	size A3
				appd	K-V SIVADAS	2006/06/23	type Product Customer Drawing
sheet index	revision sheet	E 1					

FCIconnect.com
Copyright FCI