DRAWING MADE IN THIRD ANGLE PROJECTION

© COPYRIGHT

LOC AD | DIST 39

REVISIONS					
F	ZONE	LTR	DESCRIPTION	DATE	APPROVED
		F2	REVISED PER ECO-11-005140	31MAR11	HMR

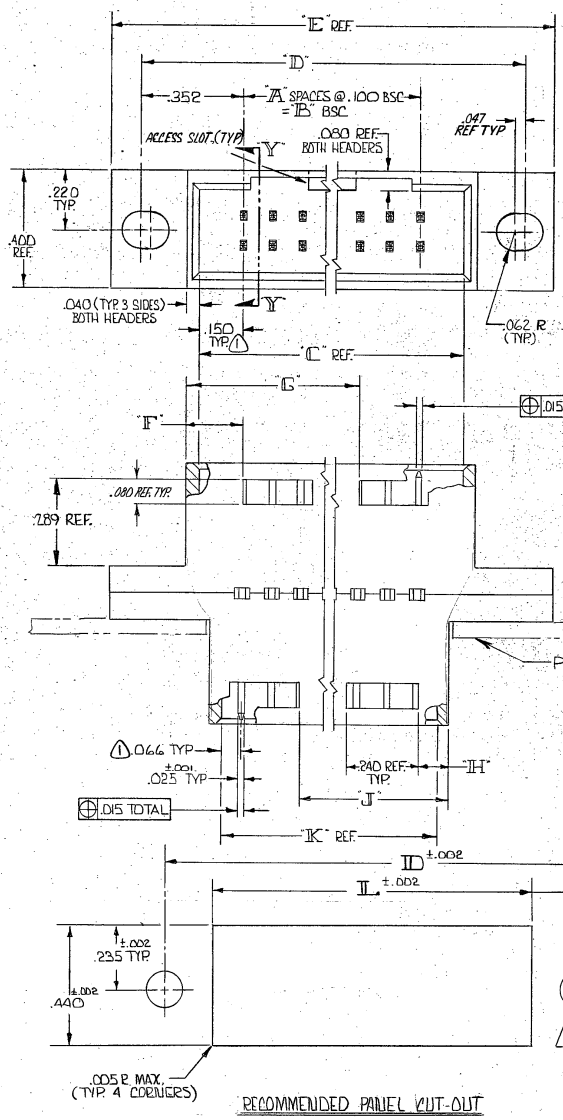

RECOMMENDED PANEL CUT-OUT

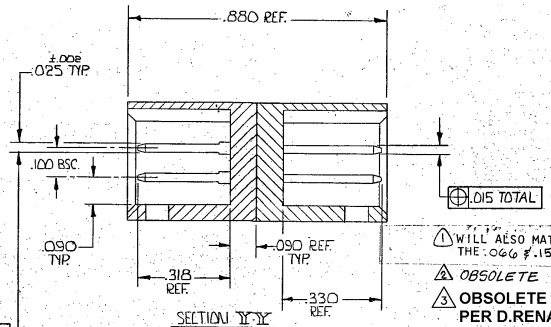

SECTION Y-Y

1 WILL ALSO MATE W/OTHER CONNECTORS WHICH ARE COMPATIBLE WITH THE .066 & .150 END DIMS.

2 OBSOLETE PART NUMBER

3 OBSOLETE PARTS: OBSOLETE CIS STREAMLINING PER D.RENAUD/D.SINISI

	L	K	J	H	G	F	E	D	C	B	A	NO. OF POS.	PART NO
3 OBSOLETE	3.132	3.032	2.806	.106	2.890	.190	3.804	3.604	3.200	2.900	29	60	~~2-87496-6~~
	3.032	2.932	2.706	↓	2.790	↓	3.704	3.504	3.100	2.800	28	58	2-2 -5
	2.932	2.832	2.606		2.690		3.604	3.404	3.000	2.700	27	56	2-2 -4
	2.832	2.732	2.506		2.590		3.504	3.304	2.900	2.600	26	54	2-2 -3
	2.732	2.632	2.406		2.490		3.404	3.204	2.800	2.500	25	52	2-2 -2
	2.532	2.432	2.206		2.290		3.204	3.004	2.600	2.300	23	48	2-2 -1
	2.432	2.332	2.106		2.190		3.104	2.904	2.500	2.200	22	46	2-2 -0
	2.332	2.232	2.006		2.090		3.004	2.804	2.400	2.100	21	44	1-2 -9
	2.232	2.132	1.906		1.990		2.904	2.704	2.300	2.000	20	42	1-2 -8
3 OBSOLETE	2.132	2.032	1.806		1.890		2.804	2.604	2.200	1.900	19	40	~~1-7~~
	2.032	1.932	1.706		1.790		2.704	2.504	2.100	1.800	18	38	1-2 -6
	1.932	1.832	1.606		1.690		2.604	2.404	2.000	1.700	17	36	1-2 -5
3 OBSOLETE	1.832	1.732	1.506		1.590		2.504	2.304	1.900	1.600	16	34	~~1-4~~
	1.732	1.632	1.406		1.490		2.404	2.204	1.800	1.500	15	32	1-2 -3
3 OBSOLETE	1.632	1.532	1.306		1.390		2.304	2.104	1.700	1.400	14	30	~~1-2~~
	1.532	1.432	1.206		1.290		2.204	2.004	1.600	1.300	13	28	1-2 -1
3 OBSOLETE	1.432	1.332	1.106		1.190		2.104	1.904	1.500	1.200	12	26	~~1-87496-0~~
	1.332	1.232	1.006		1.090		2.004	1.804	1.400	1.100	11	24	-9
	1.232	1.132	.906	↓	.990	↓	1.904	1.704	1.300	1.000	10	22	2 -8
	1.132	1.032	.806	.106	.890	.190	1.804	1.604	1.200	.900	9	20	-7
	1.032	.932	—	.406	—	.490	1.704	1.504	1.100	.800	8	18	2 -6
	.932	.832	—	.306	—	.390	1.604	1.404	1.000	.700	7	16	2 -5
	.832	.732	—	.306	—	.390	1.504	1.304	.900	.600	6	14	2 -4
	.732	.632	—	.206	—	.290	1.404	1.204	.800	.500	5	12	2 -3
	.632	.532	—	.206	—	.290	1.304	1.104	.700	.400	4	10	-2
	2.632	2.532	2.306	.106	2.390	.190	3.304	3.104	2.700	2.400	24	50	87496-1

87496

UNLESS OTHERWISE SPECIFIED DIMENSIONS ARE IN INCHES.
TOLERANCES ON:
DECIMALS ±.005
ANGLES ±

MATERIAL
HSG. - GLASS FILLED NYLON COLOR: BLACK
POST - PHOS. BRONZE

FINISH
POST - .000030 GOLD OVER .000050 NICKEL

CONTRACT NO
DR D. Renaud 8/21/75
CHK D. Sinisi 8-22-75
APPD B. Bennett 8/25/75
APPD R. Clark 8/25/75
DSGN APPD
OTHER APPD

TE Connectivity

NAME
HEADER ASS'Y. MOD II .100 x .100 CENTERS WITH PIN PROTECTION BOTH SIDES & MTG. EARS
(MATES W/AMP LATCH OR FFC ONE SIDE & MOD IV OTHER SIDE) 1

SIZE	CODE IDENT NO	DRAWING NO
C	00779	87496

SCALE — SHEET 1 of 1

CUSTOMER DRAWING

Downloaded from Elcodis.com electronic components distributor