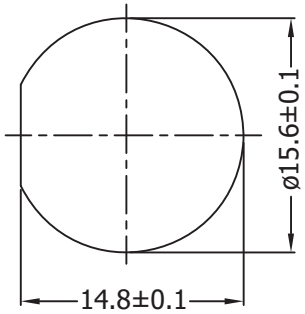

Recommended Panel Cut-Out

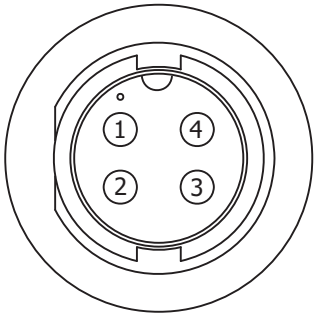

Pin Assignments
Front View

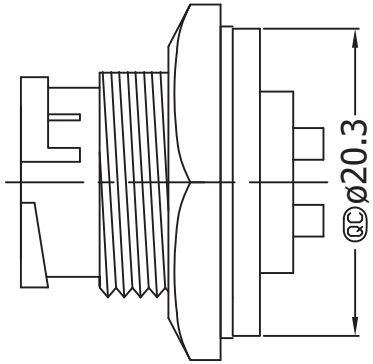

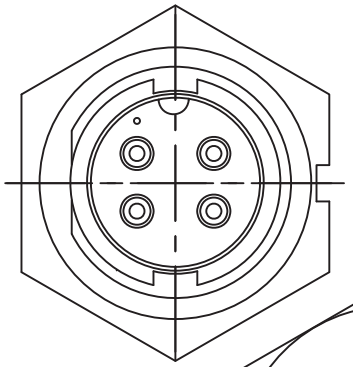

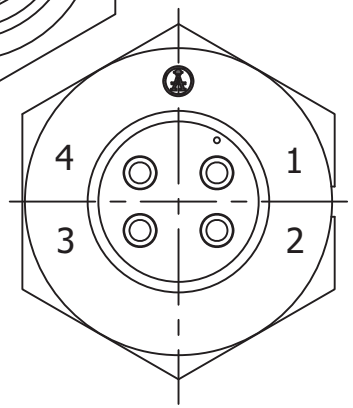

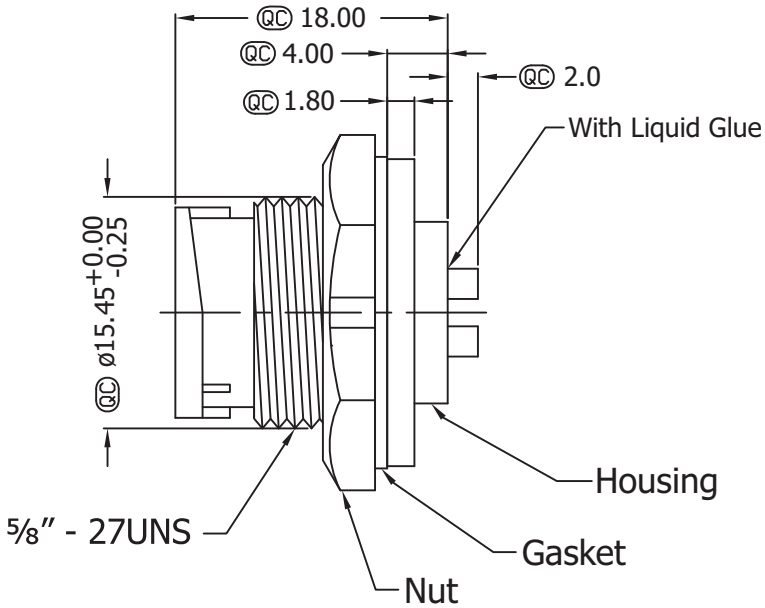

Material:

- Waterproof Rate: IP67
- Housing: Nylon+GF, Black
- Male Pin: Copper Alloy, Gold Plated
- Nut: Nylon+GF, Black
- Gasket: EPDM, Black
- Maximum Panel Thickness: 4.0MM

QC Quality Control: Important Dimension to check

Unit: MM±0.10MM

RoHS Complaint

Scale	1:1
TOLERANCE	
X.X	±0.40
X.XX	±0.25
X.XXX	±0.15
Angle	±3°

Modification	Date	Name

		Name
Drawn	12.01.11	Chappell
Approved		

ASSMANN WSW components

Item No.
A-CR-04PMMS-LC-WP-R
(Male, 4 Pin)

Title: Waterprood Lock Type Circular Connector - 4 Pin, Panel Mount, Solder Type, Male Connector, Male Pin (5A)

Drawing No.

rev00

Replace

Sheet