DATE	BY	REVISION

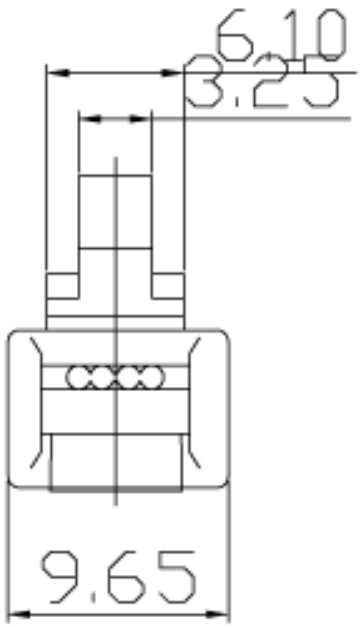

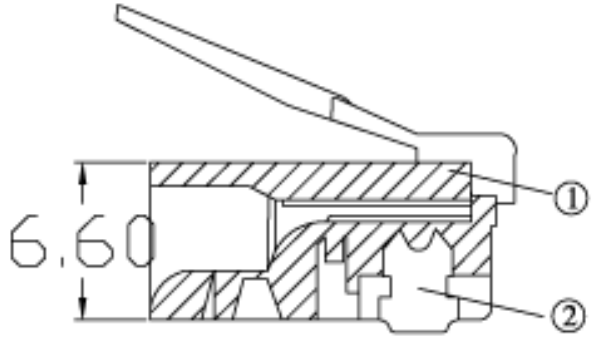

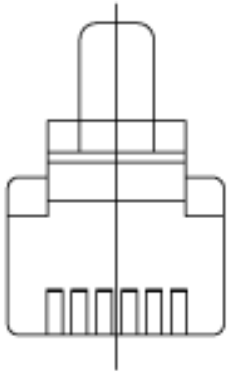

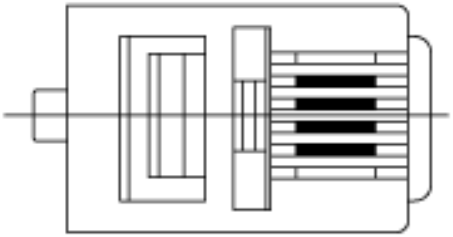

6P4C PLUG UNSHIELD,
50U" ,FOR ROUND CABLE

*ROHS COMPLIANT

RoHS
Compliant

DATE	10 JAN,2006	PARTS NO		TITLE:	6P4C PLUG,FOR ROUND CABLE,50u"	DRAWN	Y.C.C 1/10	CHECK		APPRO	
UNIT	MM	DRAWN NO			*A-MO-6/4-SR-R*	ASSMANN ELECTRONICS,INC.					
SCALE		BUYER NO	002								