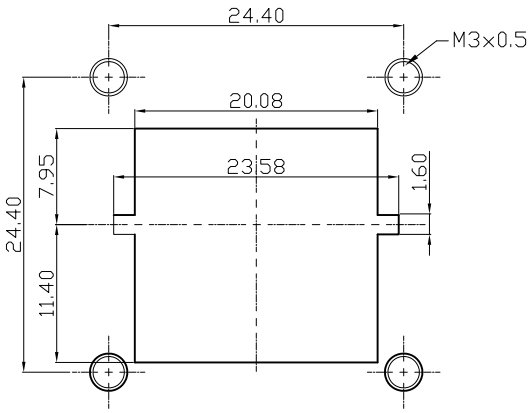

Recommended Panel Cut-Out

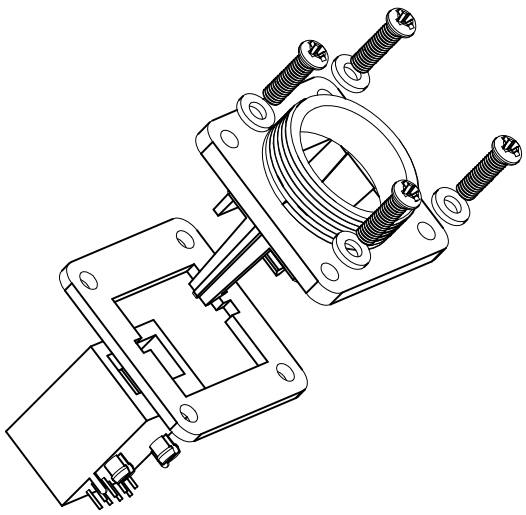

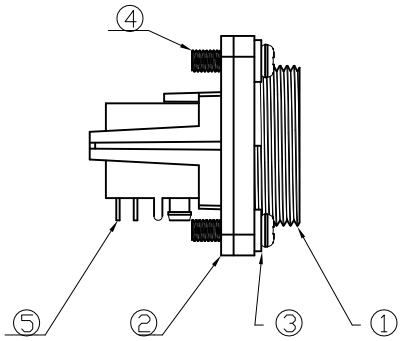

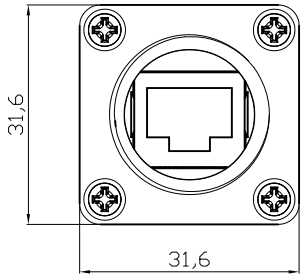

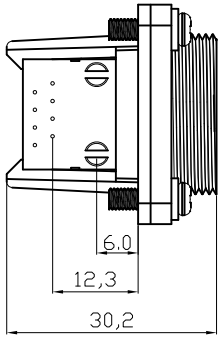

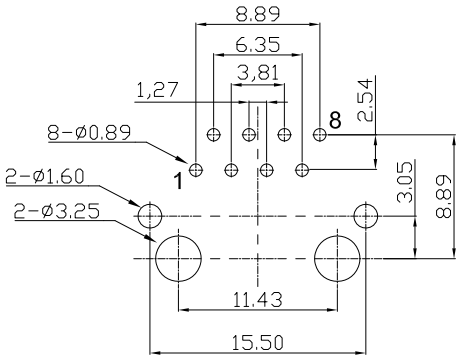

PCB Layout ③

NOTES:

Waterproof Rate: IP67
Connector: Black, ABS
Set ② ③ ④in one 1#Zipper Bag

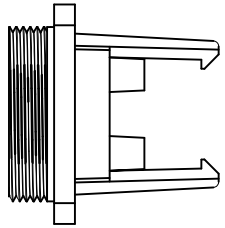

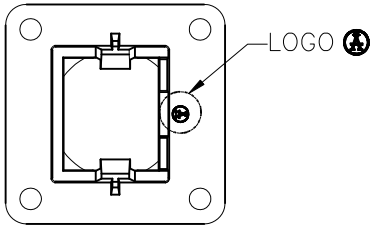

RoHS compliant

Scale	Free
TOLERANCE	
.X	±0.25
.XX	±0.1
.XXX	±0.05
Angle	±1°

Id.	Modification	Date	Name
③	Modify PCB Layout dimensions	13.07.2009	Dean
②	Update	06.07.2009	Dean
①	Drawn	27.09.2007	N.Schulz

	Date	Name
Drawn	27.09.2007	N.Schulz
Approved	06.07.2009	Hellwig

ASSMANN WSW components

Customer-No.

ASSMANN WSW-No.
A-RJ45DFR

Drawing-No.
ASS 1554 CO

rev03

Replace

Sheet

S.117