5. 电气方框图

主板方框图

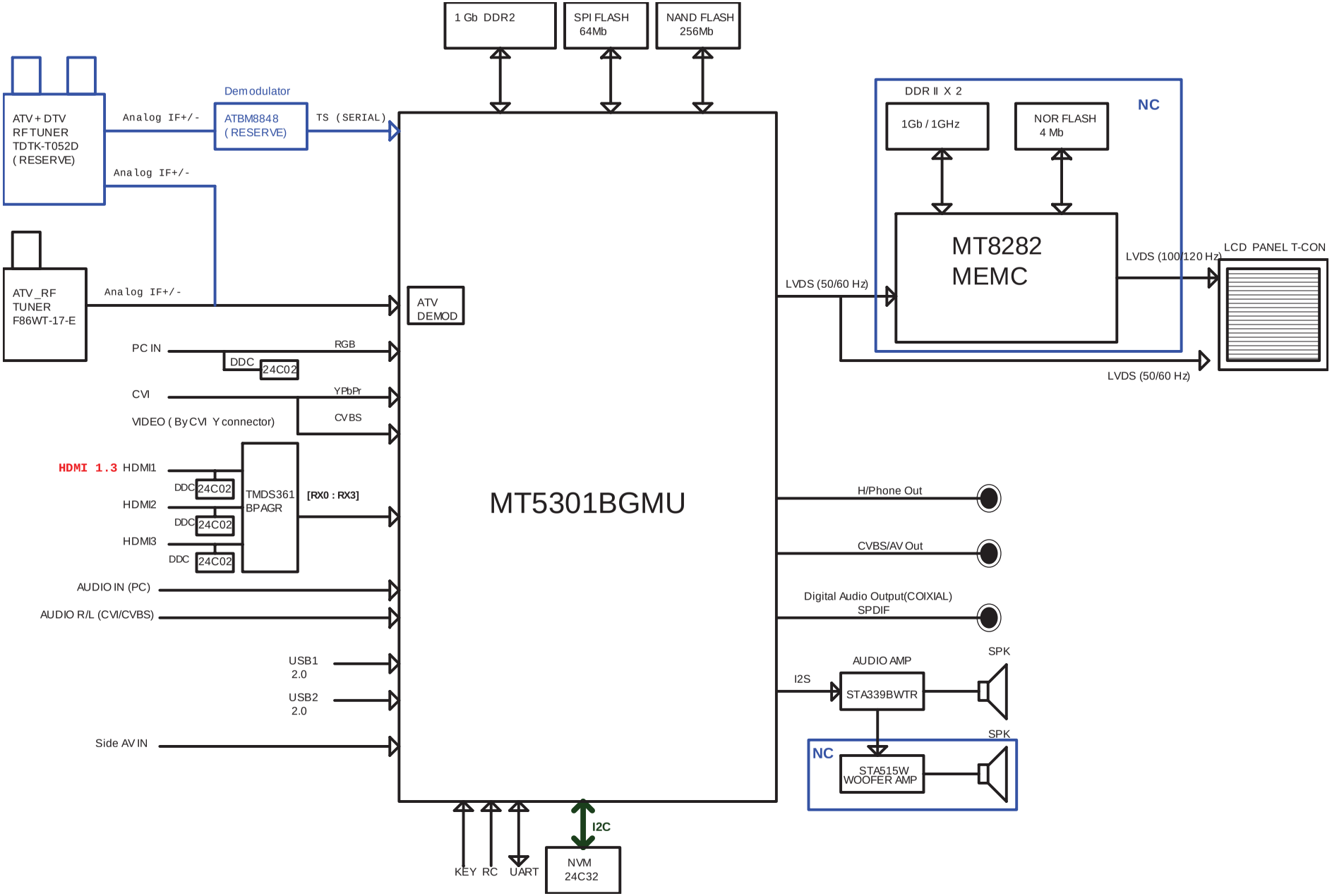

电源框图

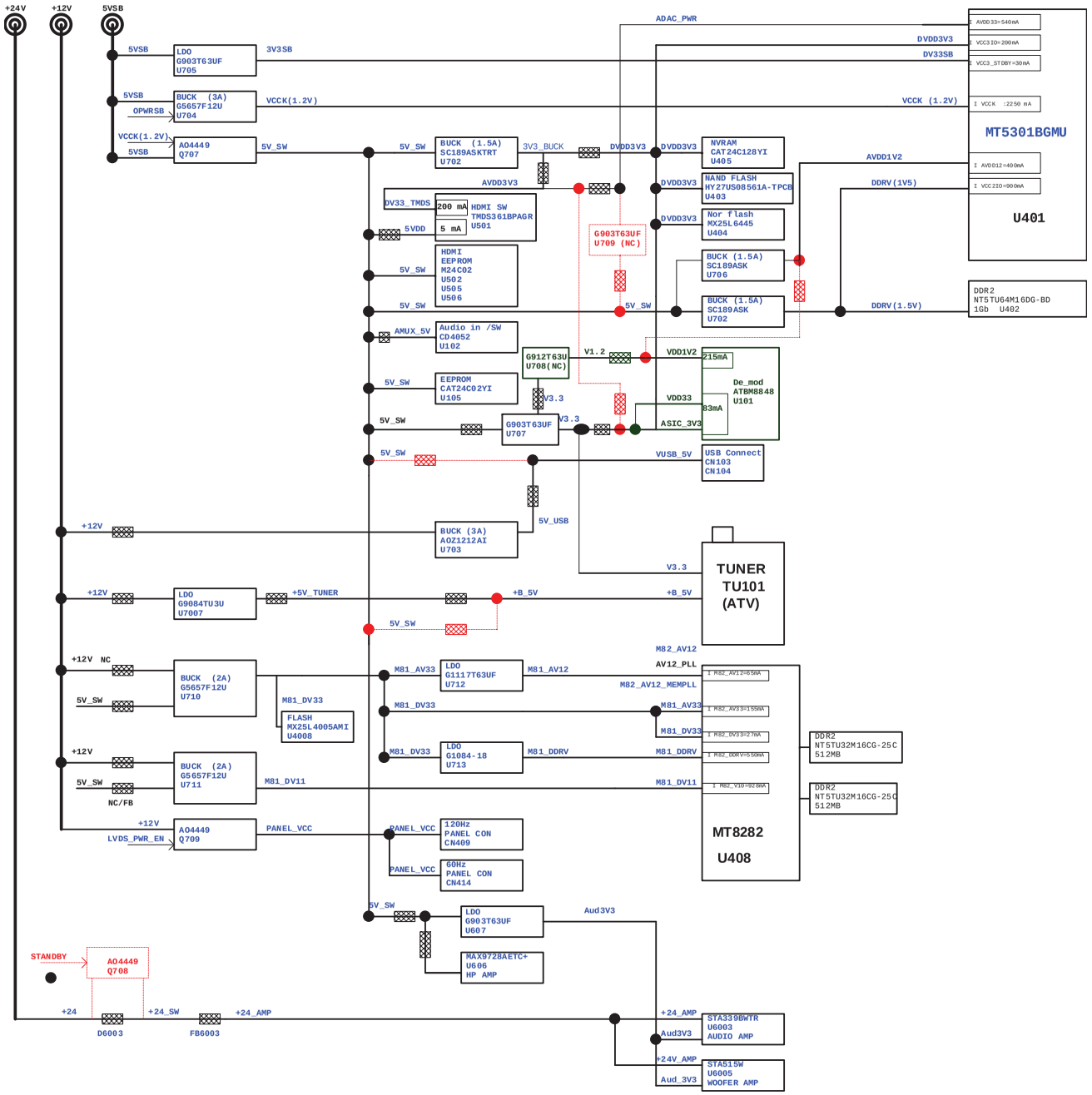
+24V
+12V
5VSB
LDO G903T63UF U705
3V3SB
BUCK (3A) G5657F12U U704
OPWRSB
VCCK(1.2V)
AO4449 Q707
5V_SW
BUCK (1.5A) SC189ASKTRT U702
3V3_BUCK
DVDD3V3
AVDD3V3
DV33_TMDS
200 mA
HDMI SW TMDS361BPAGR U501
5 mA
5VDD
HDMI EEPROM M24C02 U502 U505 U506
AMUX_5V
Audio in /SW CD4052 U102
EEPROM CAT24C02YI U105
G903T63UF U707
V3.3
G912T63U U708(NC)
V1.2
G903T63UF U709 (NC)
ADAC_PWR
NVRAM CAT24C128YI U405
NAND FLASH HY27US08561A-TPCB U403
Nor flash MX25L6445 U404
BUCK (1.5A) SC189ASK U706
BUCK (1.5A) SC189ASK U702
VDD1V2
215mA
De_mod ATBM8848 U101
VDD33
83mA
ASIC_3V3
VUSB_5V
USB Connect CN103 CN104
5V_USB
BUCK (3A) AOZ1212AI U703
LDO G9084TU3U U7007
+5V_TUNER
+B_5V
TUNER TU101 (ATV)
BUCK (2A) G5657F12U U710
M81_AV33
LDO G1117T63UF U712
M81_AV12
M81_DV33
FLASH MX25L4005AMI U4008
LDO G1084-18 U713
M81_DDRV
BUCK (2A) G5657F12U U711
M81_DV11
NC/FB
AO4449 Q709
LVDS_PWR_EN
PANEL_VCC
120Hz PANEL CON CN409
60Hz PANEL CON CN414
M82_AV12
AV12_PLL
M82_AV12_MEMPLL
M81_AV33
M81_DV33
M81_DDRV
M81_DV11
MT8282
U408
DDR2 NT5TU32M16CG-25C 512MB
DDR2 NT5TU32M16CG-25C 512MB
MT5301BGMU
U401
AVDD1V2
DDRV(1V5)
DDR2 NT5TU64M16DG-BD 1Gb U402
DDRV(1.5V)
LDO G903T63UF U607
Aud3V3
MAX9728AETC+ U606 HP AMP
STANDBY
AO4449 Q708
+24
D6003
+24_SW
FB6003
+24_AMP
STA339BWTR U6003 AUDIO AMP
+24V_AMP
STA515W U6005 WOOFER AMP
Aud_3V3

6. 线路图

6.1 主板　715G4611M1A000004K

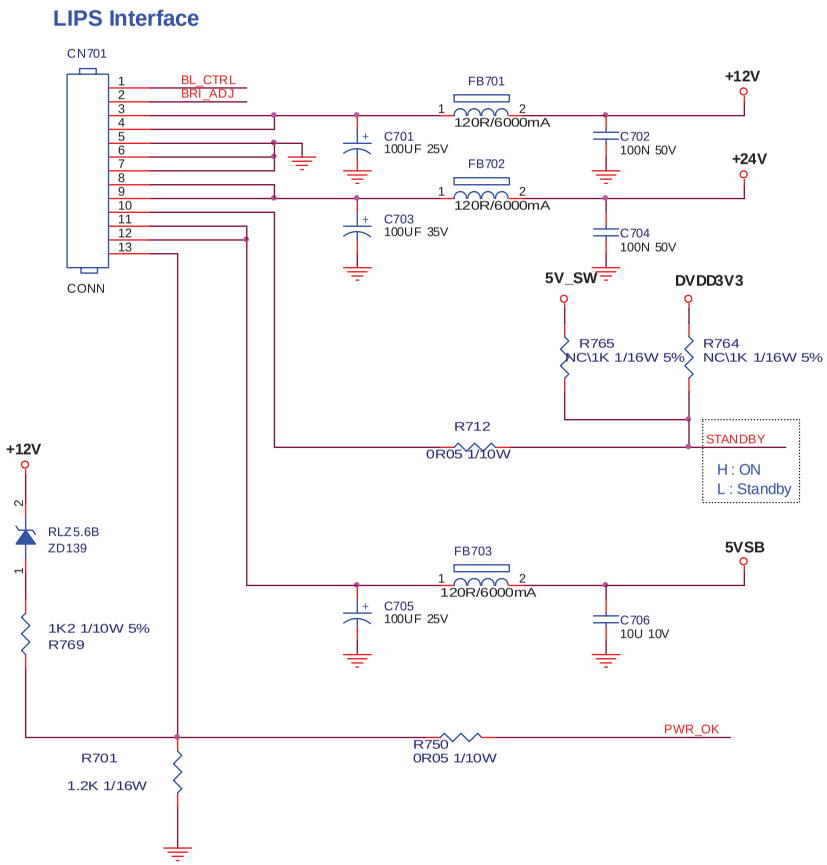

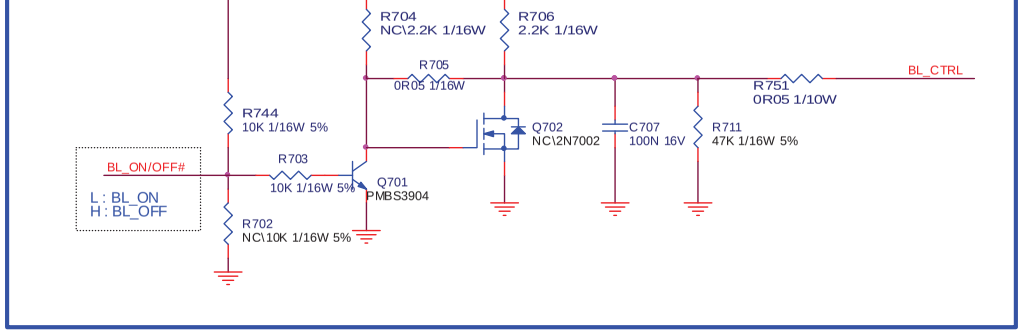

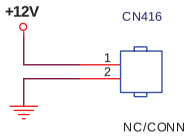

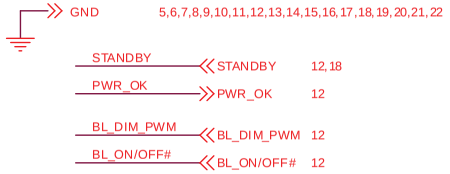

TPV (Top Victory Electronics Co., Ltd.)		OEM MODEL		Size	B
結隔瓜綢腹		TPV MODEL		Rev	M0C
Key Component	04 PSU & Inverter I/F	PCB NAME		称爹	HW4
Date	Wednesday, March 02, 2011	Sheet	4 of 22		

DC-DC Buck &Converter

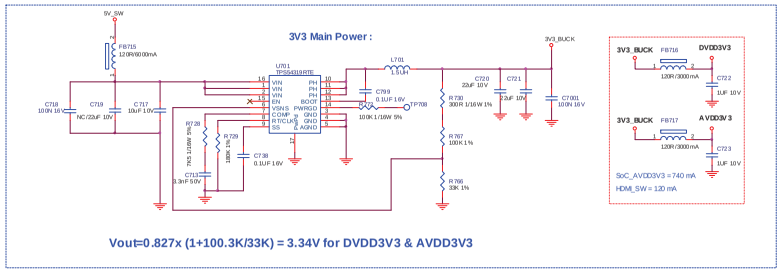

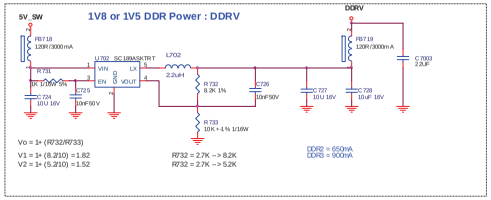

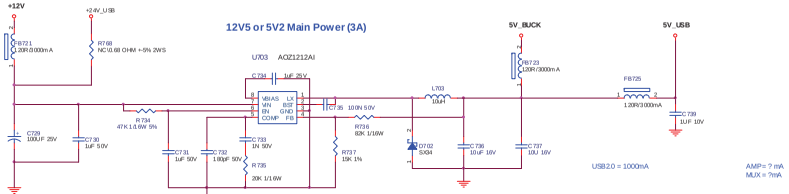

	5V2	12V5
R736	82K	220K
R737	15K	15K

Vo = 0.8 * (1+ R736/R737)
V1 = 0.8 * (1+ 220/15) = 12.5 R736 = 220K
V2 = 0.8 * (1+ 82/15) = 5.17 R736 = 82K

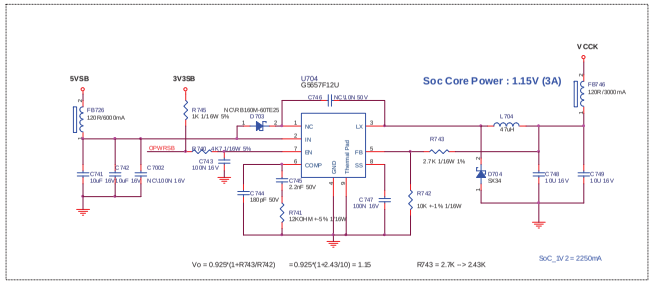

Power MOSFET Switch

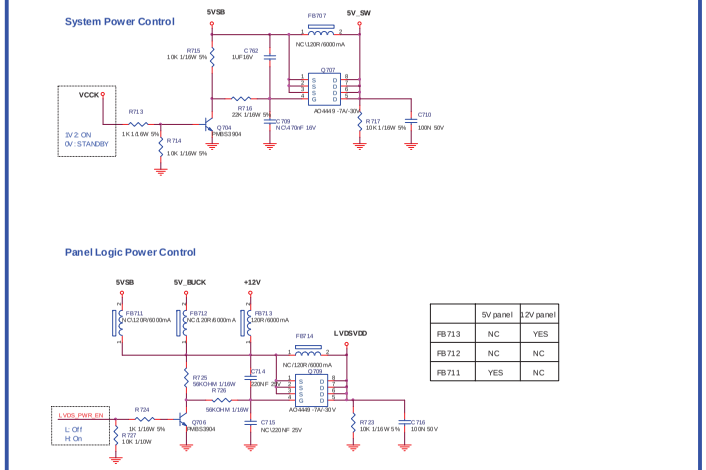

	5V panel	12V panel
FB713	NC	YES
FB712	NC	NC
FB711	YES	NC

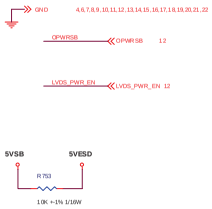

LDO Regulator

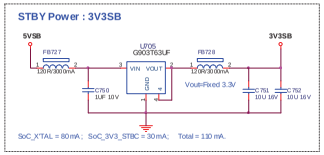

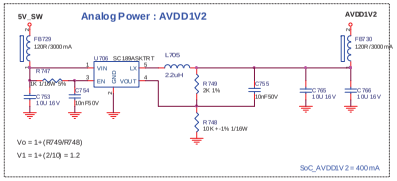

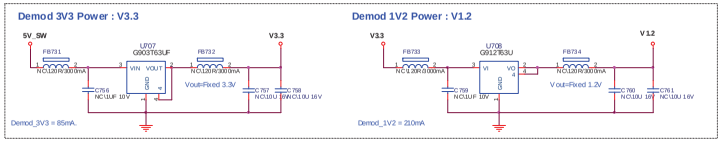

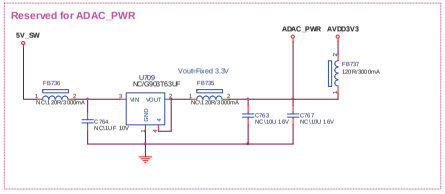

TPV (Top Victory Electronics Co., Ltd.)		OEM MODEL		Size	D
巨擘科技股份有限公司		TPV MODEL		Rev	M0C
Key Component		PCB NAME	05. DC-DC BUCK & LDO Regulator	審核	HW4
Date	Wednesday, March 02, 2011	Sheet	5 of 22		

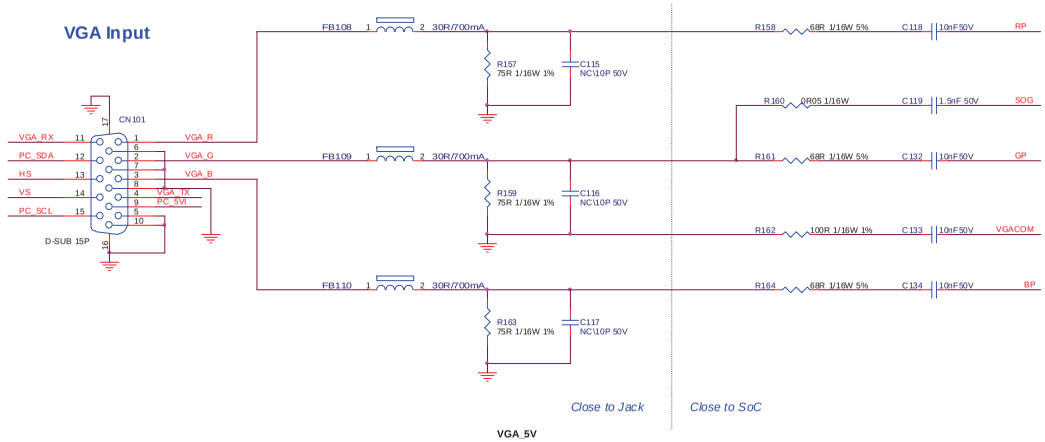

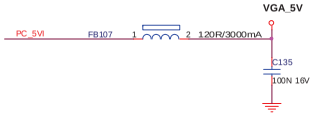

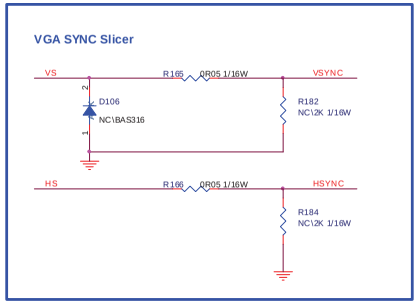

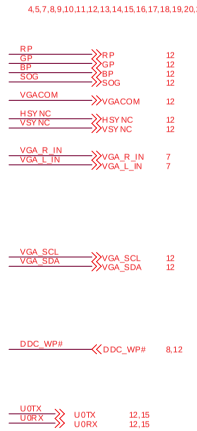

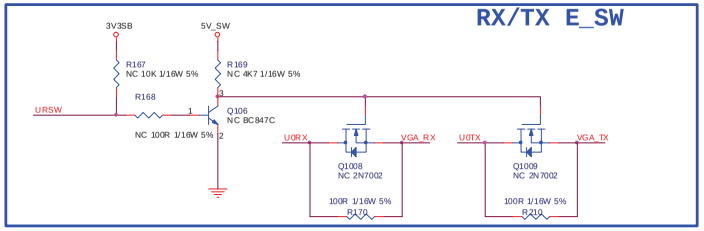

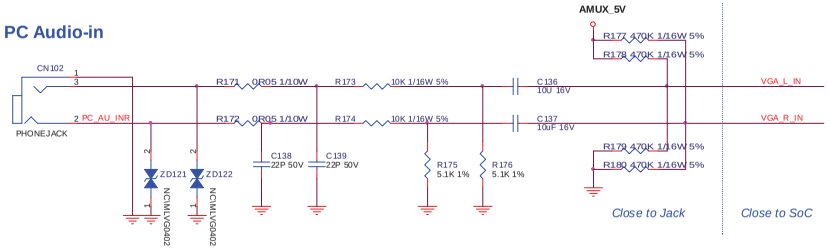

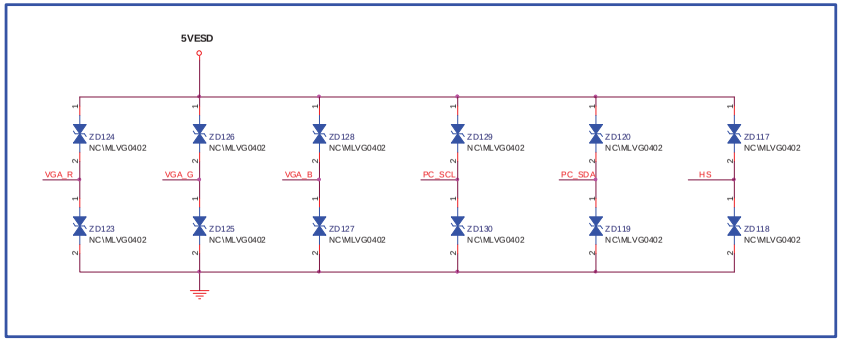

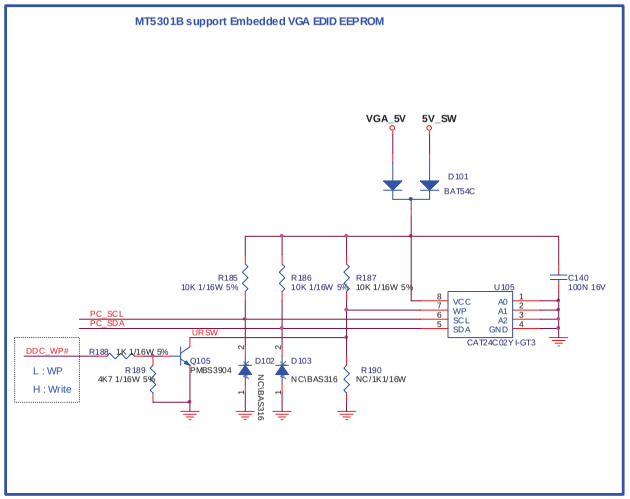

T P V (Top Victory Electronics Co., Ltd.)		OEM MODEL		Size	Custom
盾陽瓜頭觀		TPV MODEL		Rev	M0C
Key Component	06. VGA & PC Line-in	PCB NAME		板號	HW4
Date	Wednesday, March 02, 2011	Sheet	6 of 22		

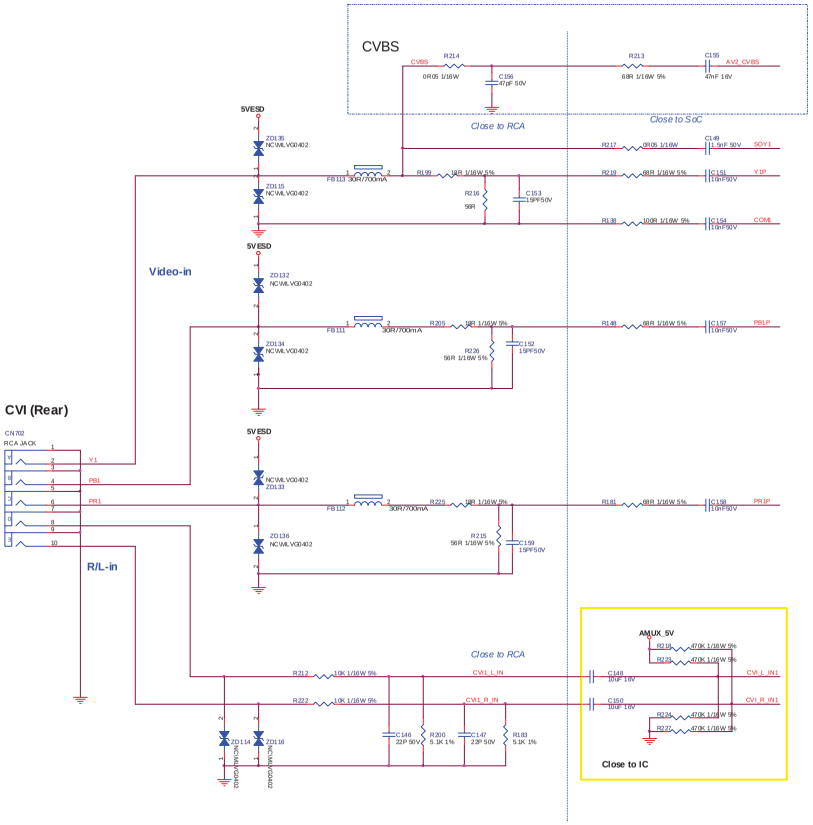

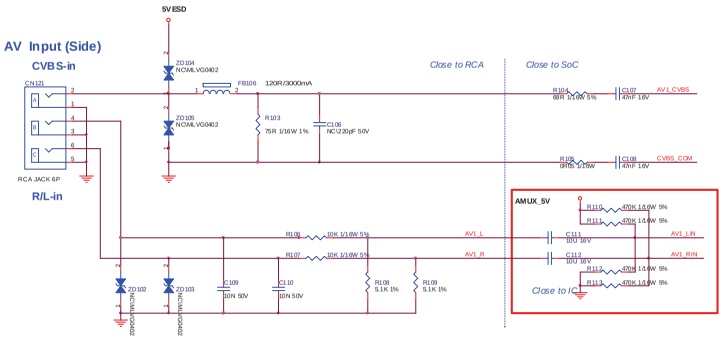

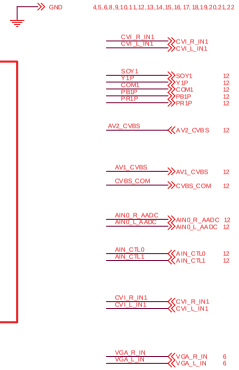

11/19 ADD

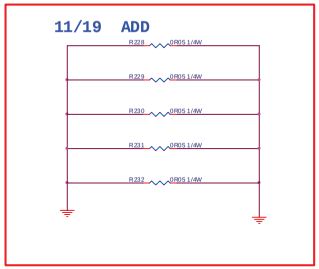

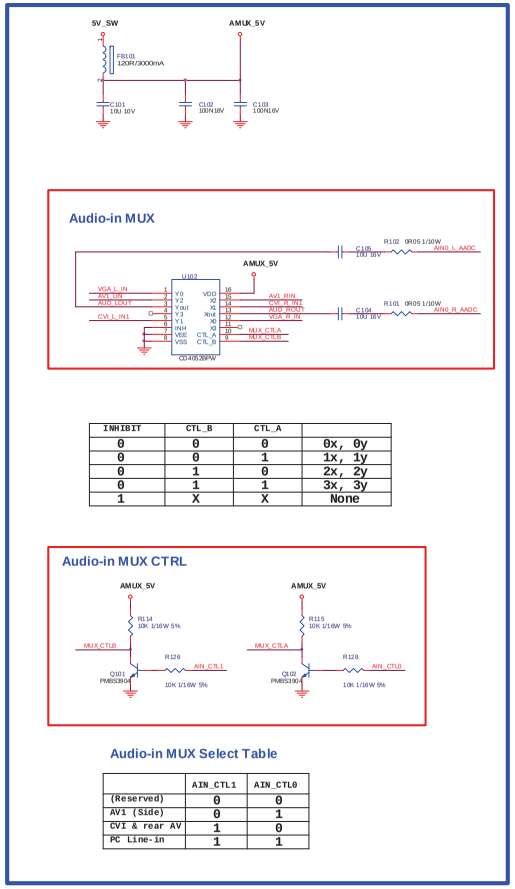

INHIBIT	CTL_B	CTL_A	
0	0	0	0x, 0y
0	0	1	1x, 1y
0	1	0	2x, 2y
0	1	1	3x, 3y
1	X	X	None

Audio-in MUX Select Table

	AIN_CTL1	AIN_CTL0
(Reserved)	0	0
AV1 (Side)	0	1
CVI & rear AV	1	0
PC Line-in	1	1

TPV (Top Victory Electronics Co., Ltd.)	OEM MODEL			Size	Custom
超前元明	TPV MODEL			Rev	NDC
KeyComponent	07. AV1L & AV2 & Audio in MUX	PCB NAME		板號	HW4
Date	Wednesday, March 02, 2011	Sheet	7 of 22		

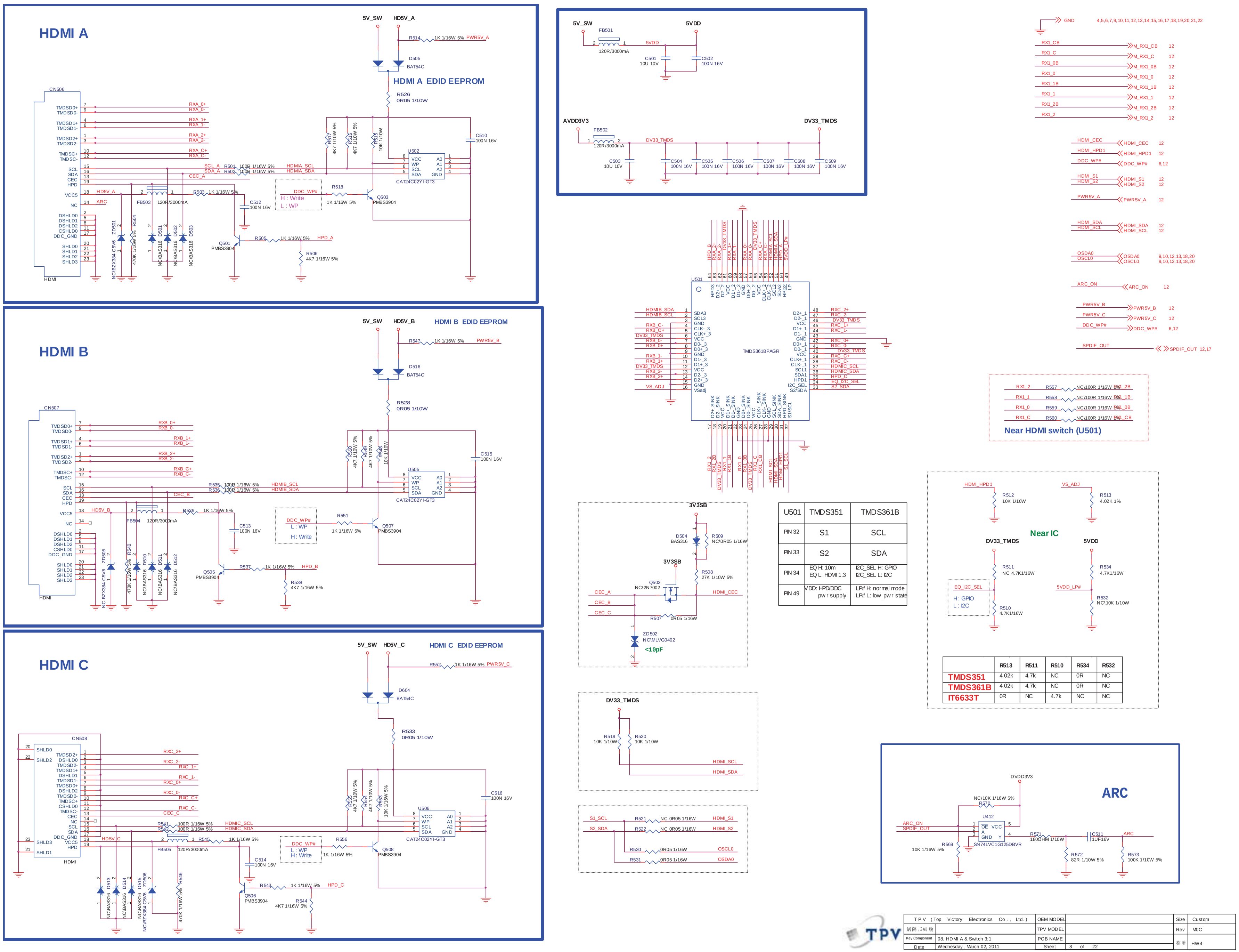
HDMI A
HDMI A EDID EEPROM
HDMI B
HDMI B EDID EEPROM
HDMI C
HDMI C EDID EEPROM
TMDS361BPAGR
Near HDMI switch (U501)
Near IC
ARC
<10pF
U501 | TMDS351 | TMDS361B
PIN 32 | S1 | SCL
PIN 33 | S2 | SDA
PIN 34 | EQ H: 10m EQ L: HDMI 1.3 | I2C_SEL H: GPIO I2C_SEL L: I2C
PIN 49 | VDD: HPD/DDC pwr supply | LP# H: normal mode LP# L: low pwr state
| R513 | R511 | R510 | R534 | R532
TMDS351 | 4.02k | 4.7k | NC | 0R | NC
TMDS361B | 4.02k | 4.7k | NC | 0R | NC
IT6633T | 0R | NC | 4.7k | NC | NC
TPV (Top Victory Electronics Co., Ltd.)
08. HDMI A & Switch 3:1
Wednesday, March 02, 2011
Sheet 8 of 22
Size Custom
Rev MDC
HW4

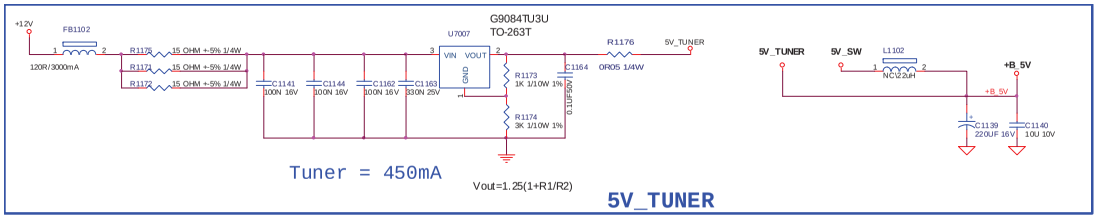

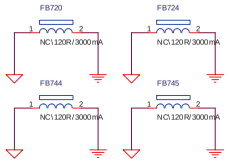

GND 4,5,6,7,8,10,11,12,13,14,15,16,17,18,19,20,21,22

Tuner TU101 :
CCM :DTI8-C40II(D+A)
LG :TDTK-G902D(D+A)
TCL :DTC86WT-2-E (D+A)
TCL :F86WT-2-E "094G PAL D 8L " (A only,)

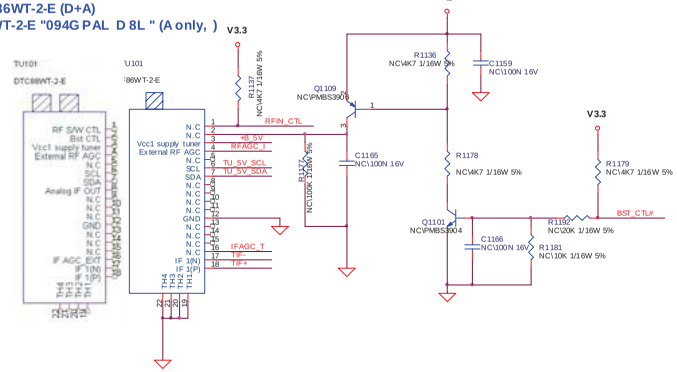

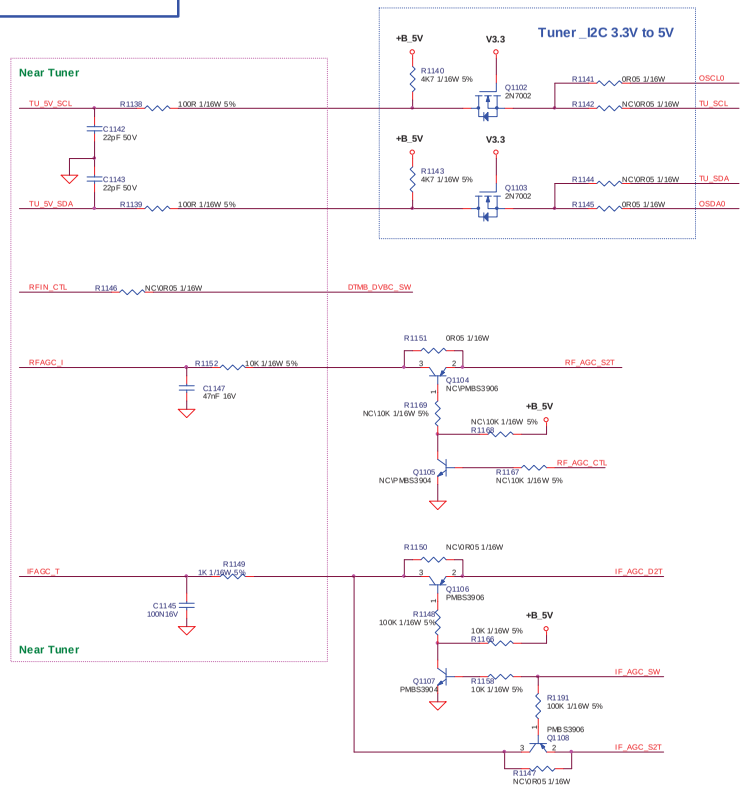

RF_AGC_S2T — RF_AGC_S2T 12
IF_AGC_S2T — IF_AGC_S2T 12
IF_AGC_D2T — IF_AGC_D2T 10
OSCL0 — OSCL0 8,10,12,13,18,20
OSDA0 — OSDA0 8,10,12,13,18,20
TU_SCL — TU_SCL 10
TU_SDA — TU_SDA 10
DTMB_DVBC_SW — DTMB_DVBC_SW 12
T2S_TIF+ — T2S_TIF+ 12
T2S_TIF- — T2S_TIF- 12
T2D_TIF+ — T2D_TIF+ 10
T2D_TIF- — T2D_TIF- 10
BST_CTL# — BST_CTL# 12
IF_AGC_SW — IF_AGC_SW 10
RF_AGC_CTL — RF_AGC_CTL 10
R1130 0R05 1/16W
R1131 0R05 1/16W
R1132 0R05 1/16W
R1133 0R05 1/16W
GND GND_A

A Tuner :

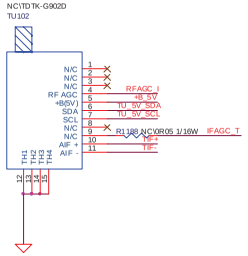

For ATV only

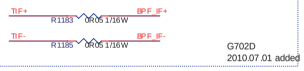

G702D
2010.07.01 added

For DTV only

A Tuner :

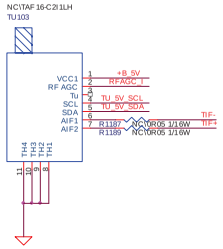

Tuner	R1153 & R1154	R1155 & R1156	R1157	C1155 / L1111	R1159 & R1160
G702D	27R	27R	100R	220pF / 100uH	50R
T032D	0R	0R	NC	NC / NC	460R

Tuner	Ext. Demod.	Scaler IC
G702D	NA	MT5301B
T032D	ATBM8848	MT5301D

IF BPF

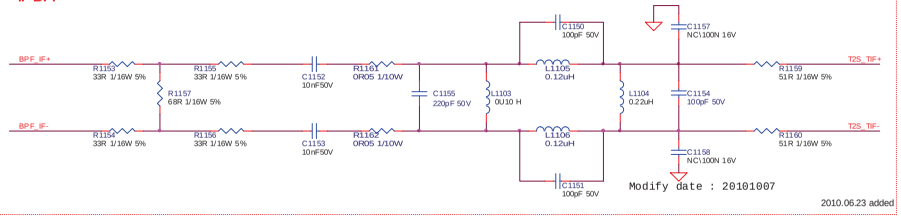

2010.06.23 added

TPV (Top Victory Electronics Co., Ltd.)		OEM MODEL		Size	Custom
新版压缩图		TPV MODEL		Rev	M0C
Key Component	09. Half NIM Tuner	PCB NAME		印章	HW4
Date	Wednesday, March 02, 2011	Sheet	9 of 22		

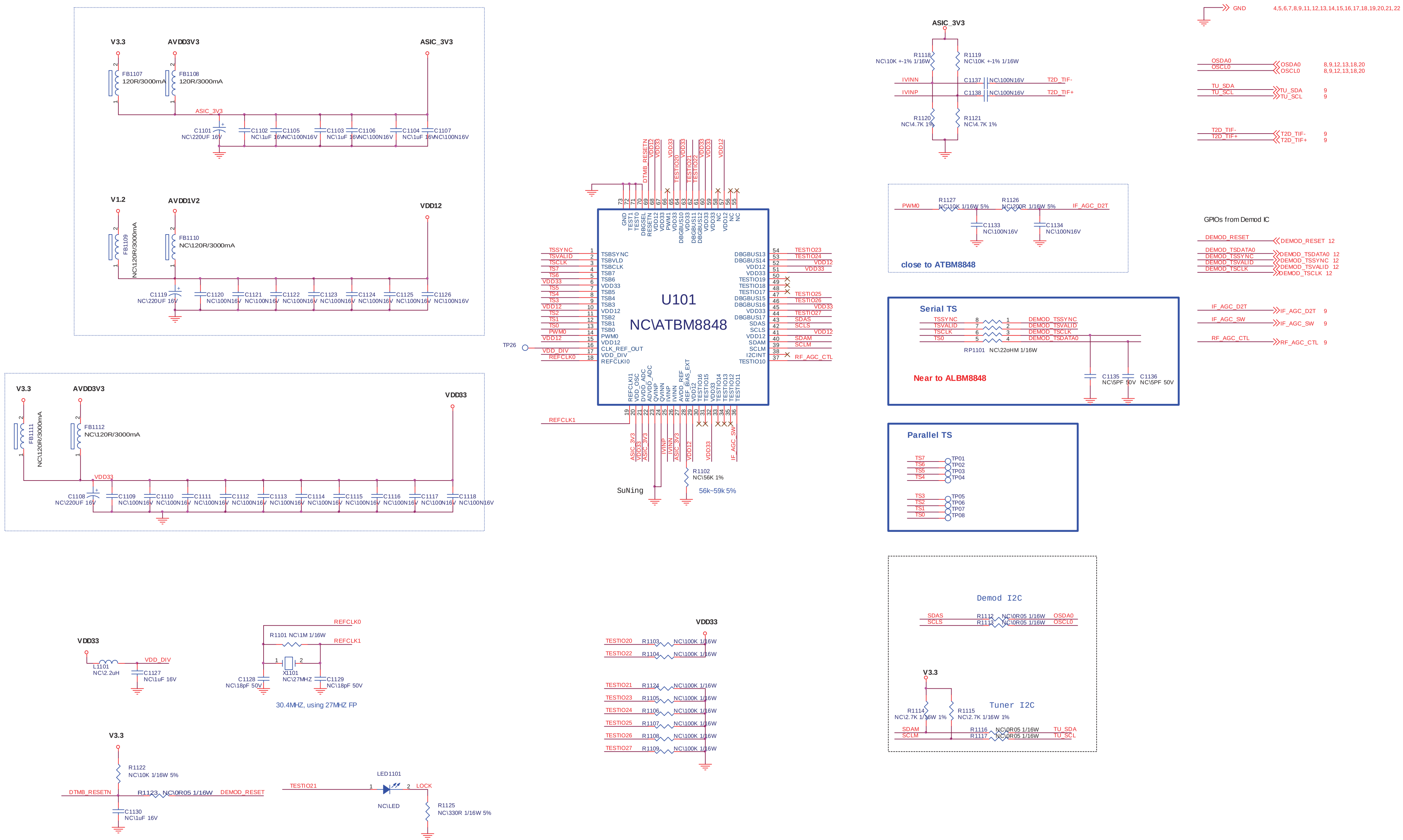

T P V (Top Victory Electronics Co., Ltd.)		OEM MODEL		Size	Custom
		TPV MODEL		Rev	M0C
Key Component	10. Demod (DTMB & DVB-T & PAL)	PCB NAME			HW4
Date	Wednesday, March 02, 2011	Sheet	10 of 22		

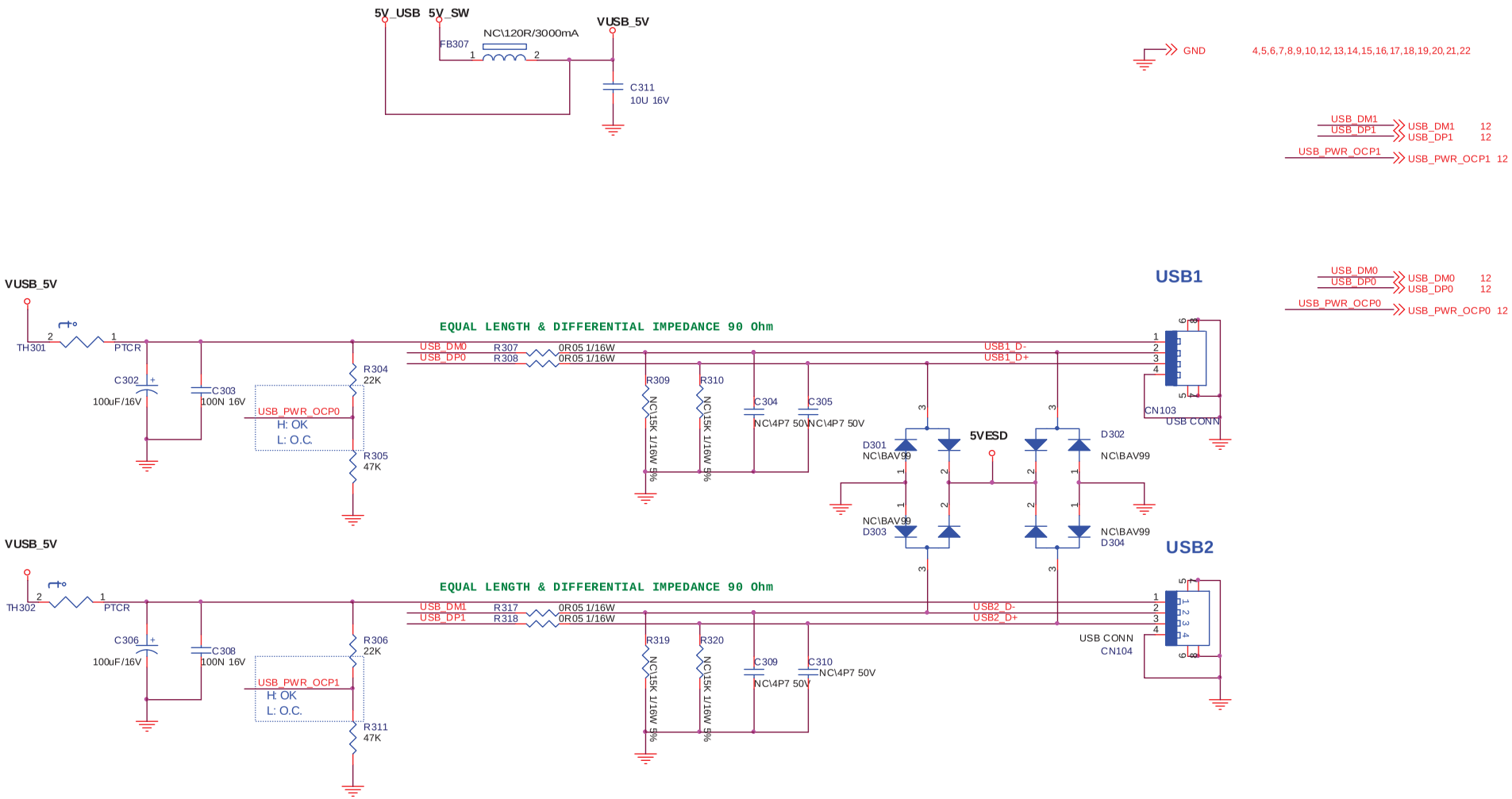

TPV (Top Victory Electronics Co., Ltd.)		OEM MODEL		Size	B
結隔瓜網腹		TPV MODEL		Rev	M0C
Key Component	11. USB1 & USB2	PCB NAME		称爹	HW4
Date	Wednesday, March 02, 2011	Sheet	11 of 22		

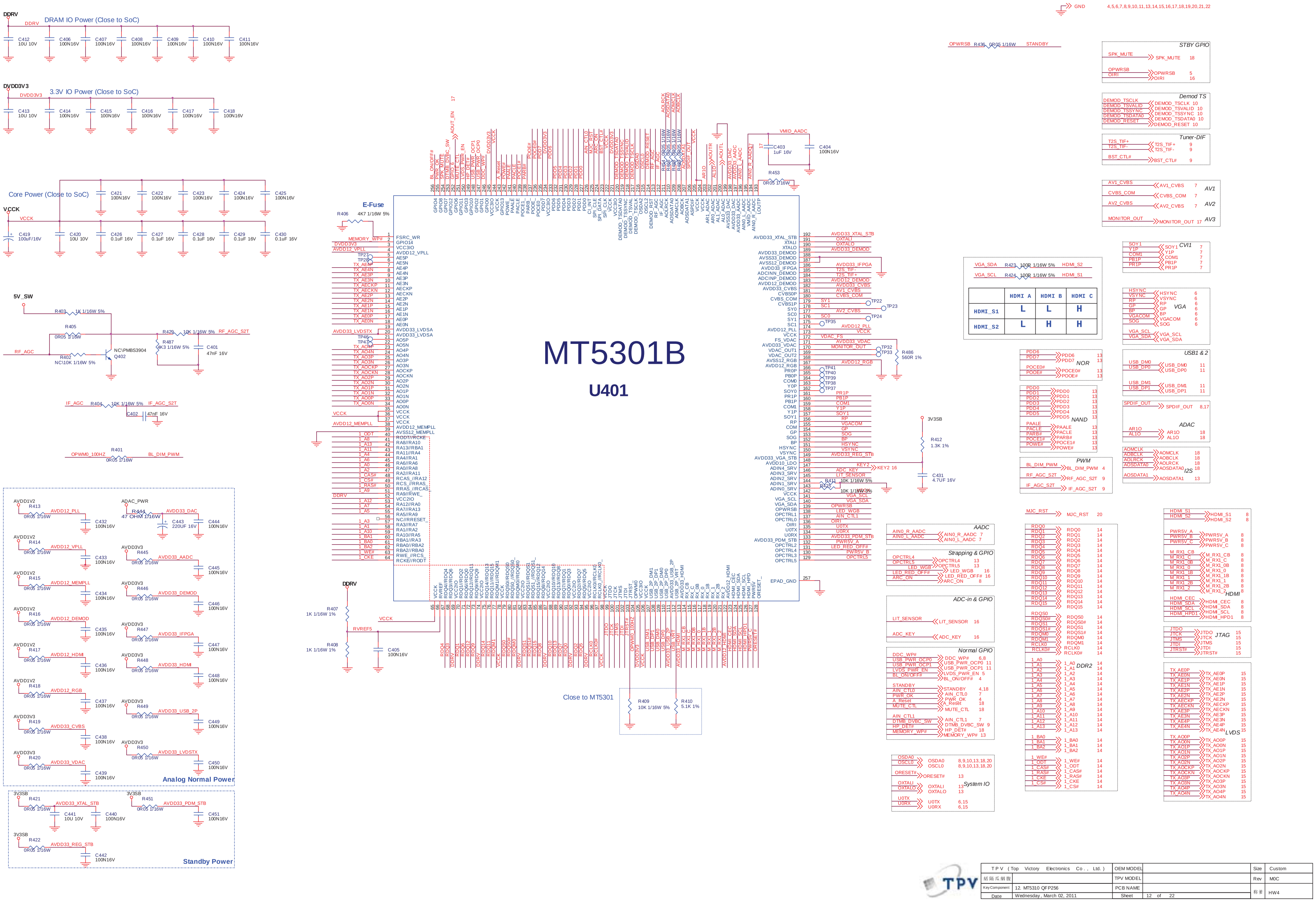

MT5301B
U401
DRAM IO Power (Close to SoC)
3.3V IO Power (Close to SoC)
Core Power (Close to SoC)
E-Fuse
Close to MT5301
Analog Normal Power
Standby Power
STBY GPIO
Demod TS
Tuner-DIF
AV1
AV2
AV3
CVI1
VGA
USB1 & 2
NOR
NAND
ADAC
I2S
PWM
AADC
Strapping & GPIO
ADC-in & GPIO
Normal GPIO
System IO
DDR2
HDMI
JTAG
LVDS
HDMI A
HDMI B
HDMI C
HDMI_S1
HDMI_S2
TPV (Top Victory Electronics Co., Ltd.)
OEM MODEL
TPV MODEL
PCB NAME
12. MT5310 QFP256
Wednesday, March 02, 2011
Sheet 12 of 22
Size Custom
Rev M0C
HW4

NOR Flash

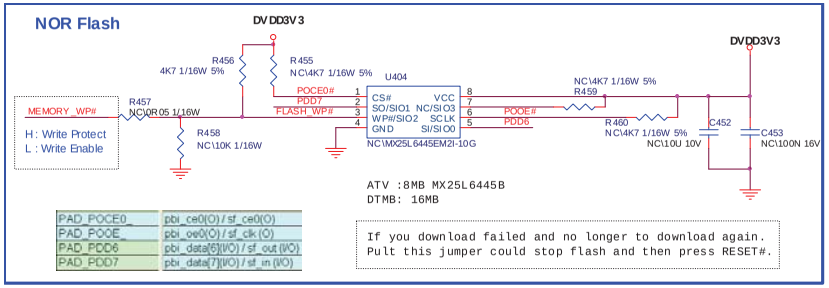

PAD_POCE0_	pbi_ce0(O) / sf_ce0(O)
PAD_POOE_	pbi_oe0(O) / sf_clk (O)
PAD_PDD6	pbi_data[6](I/O) / sf_out (I/O)
PAD_PDD7	pbi_data[7](I/O) / sf_in (I/O)

If you download failed and no longer to download again.
Pult this jumper could stop flash and then press RESET#.

Strapping

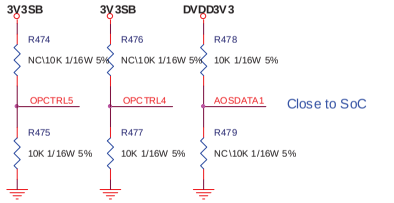

Strapping	OPCTRL5(O)	OPCTRL4(O)	AOSDATA1(O)
ICE mode + 27M + serial boot	0	0	0
ICE mode + ROM boot + 27M	0	0	1
ICE mode + 54M + serial boot	0	1	0
ICE mode + ROM boot + 54M	0	1	1
OLT mode	1	0	0
scan mode	1	0	1
cpu model mode	1	1	0
Boundary scan mode	1	1	1

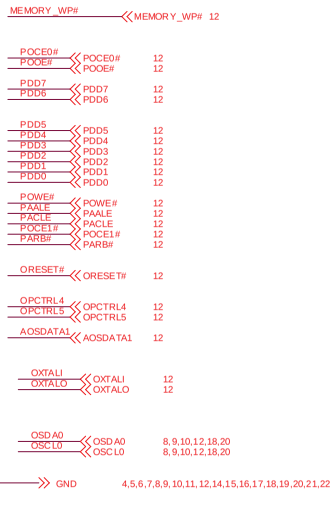

256Mbit Nand Flash

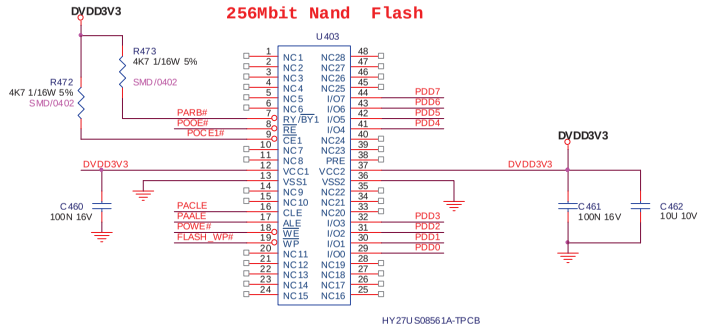

Name	Part Number	Size	Type	Package
Samsung	K9F1G08U0B	1Gbit	SLC	TSOP48
Samsung	K9F5608U0B	256Mbit	SLC	TSOP48
Samsung	K9F12081208U0C-PIBOT	512Mbit	SLC	TSOP48
Samsung	K9F1G08U0C	1Gbit	SLC	TSOP48
ST	NAND128W3A	128Mbit	SLC	TSOP48
ST	NAND256W3A2BN6	256Mbit	SLC	TSOP48
ST	NAND01GW3B2B	1Gbit	SLC	TSOP48
ST	NAND01GW3B2C	1Gbit	SLC	TSOP48
ST	NAND02GW3B2D	2Gbit	SLC	TSOP48
ST	NAND08GW3F2A	8Gbit	SLC	TSOP48
Numonyx	NAND512W3A2DN6F	512Mbit	SLC	TSOP48
HYNIX	HY27US08281	128Mbit	SLC	TSOP48
HYNIX	HY27US08561	256Mbit	SLC	TSOP48
HYNIX	HY27UF081G2A	1Gbit	SLC	TSOP48
HYNIX	HY27UF082G2B	2Gbit	SLC	TSOP48
HYNIX	H27U518S2CTP-BI	512Mbit	SLC	TSOP48
HYNIX	H27UAG8T2A	16Gbit	MLC	TSOP48
HYNIX	H27UAG8T2M	16Gbit	MLC	TSOP48
Micron	MT29F1G08AAC	1Gbit	SLC	TSOP48
Micron	MT29F2G08AAD	2Gbit	SLC	TSOP48

NVRAM

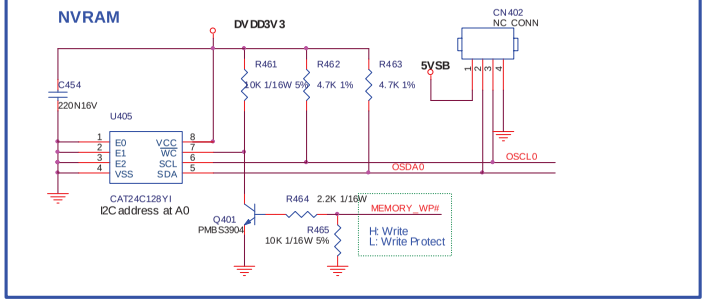

Reset IC

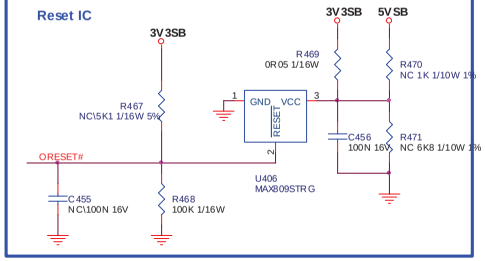

STBC CRYSTAL

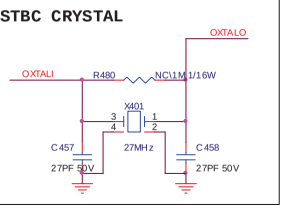

TPV (Top Victory Electronics Co., Ltd.)		OEM MODEL		Size	C
廷陽瓜銅廠		TPV MODEL		Rev	M0C
Key Component	13. SoC Peripheral	PCB NAME		称爹	HW4
Date	Wednesday, March 02, 2011	Sheet	13 of 22		

DDR2#1-64Mx16-1066MHz

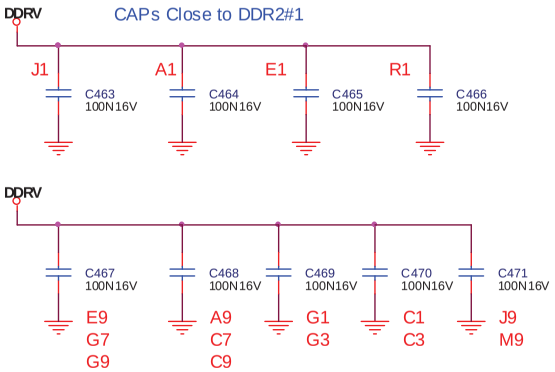

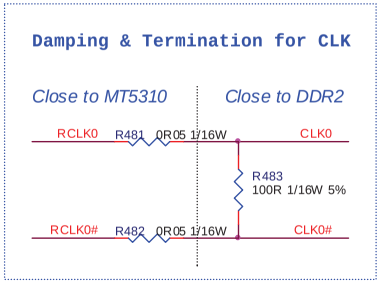

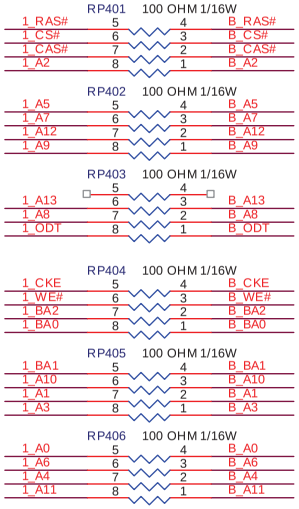

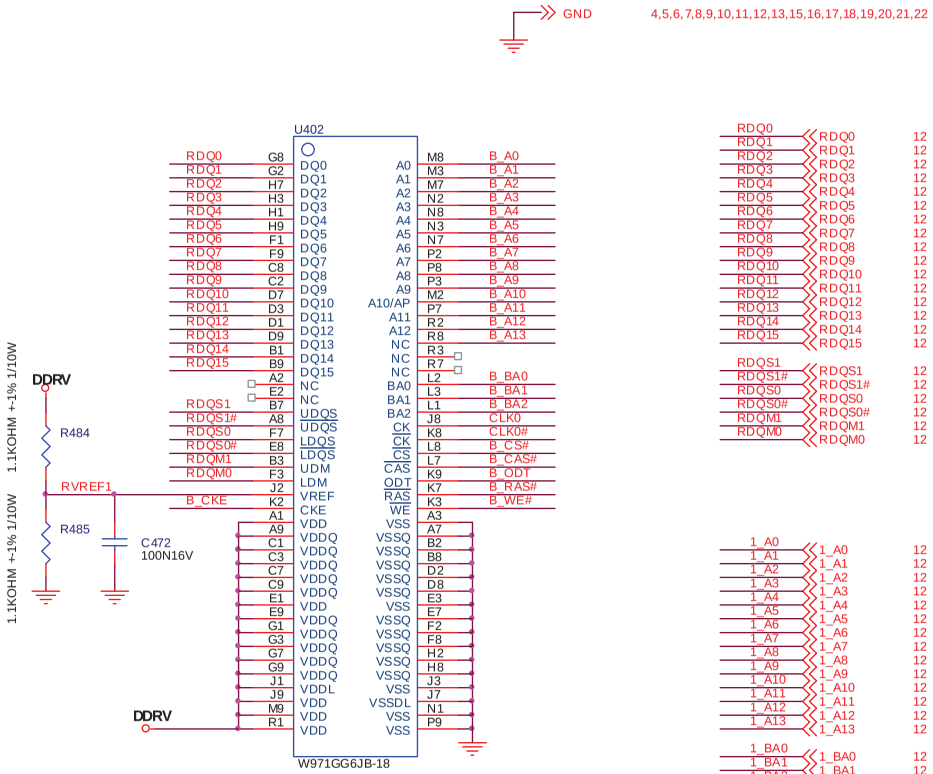

Name	Part Number	Size	Type
Samsung	K4T1G164QF-BCF8	64Mx16	1066
Nanya	NT5TU64M16GG-BE	64Mx16	1066
Nanya	NT5TU64M16GG-BD	64Mx16	1066
Hynix	H5PS1G63EFR-G7C	64Mx16	1066
Nanya	NT5TU64M16GG-AC	64Mx16	800
Winbond	W971GG6JB-25	64Mx16	800
Hynix	H5PS1G63EFR-S6C	64Mx16	800
Hynix	H5PS5162FFR-S6C	32Mx16	800
Samsung	K4T51163BFR-H9C	32Mx16	800

TPV (Top Victory Electronics Co., Ltd.)		OEM MODEL		Size	B
紬隔瓜綱腹		TPV MODEL		Rev	M0C
Key Component	14. DDR2	PCB NAME		称爹	HW4
Date	Wednesday, March 02, 2011	Sheet	14 of 22		

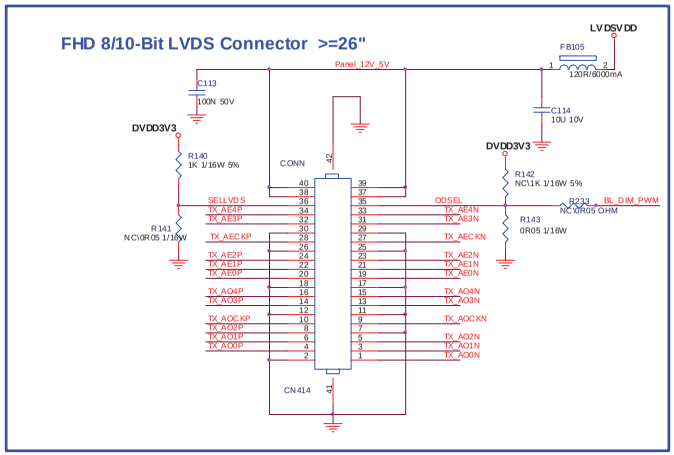

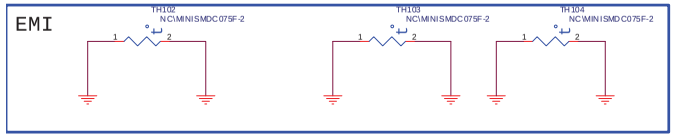

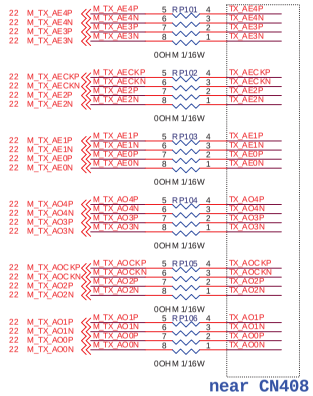

near CN408

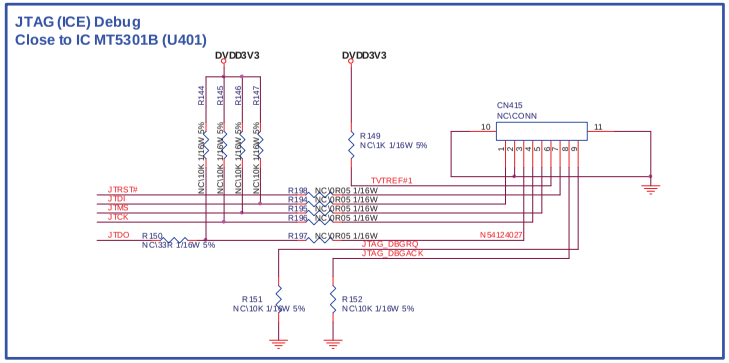

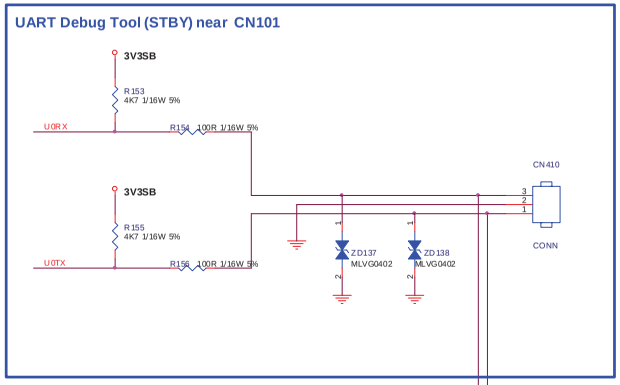

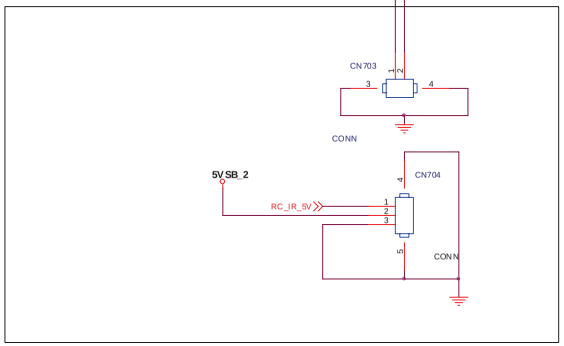

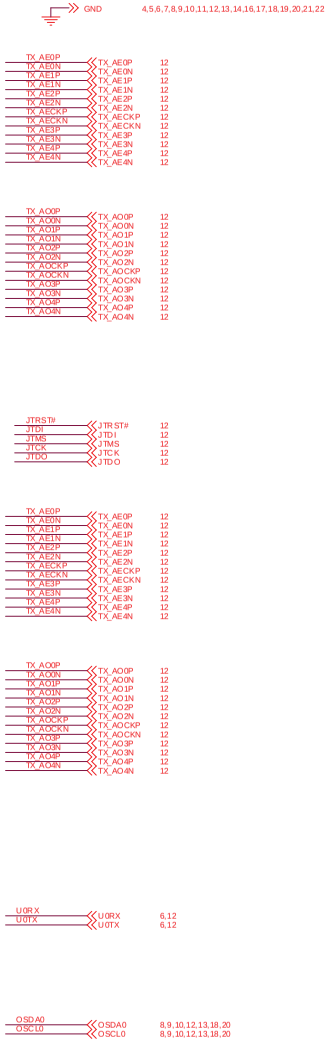

TPV (Top Victory Electronics Co., Ltd.)		OEM MODEL		Size	C
福陽瓜頌股		TPV MODEL		Rev	M0C
KeyComponent	15. LVDS & JTAG & UART	PCB NAME		修案	HW4
Date	Wednesday, March 02, 2011	Sheet	15 of 22		

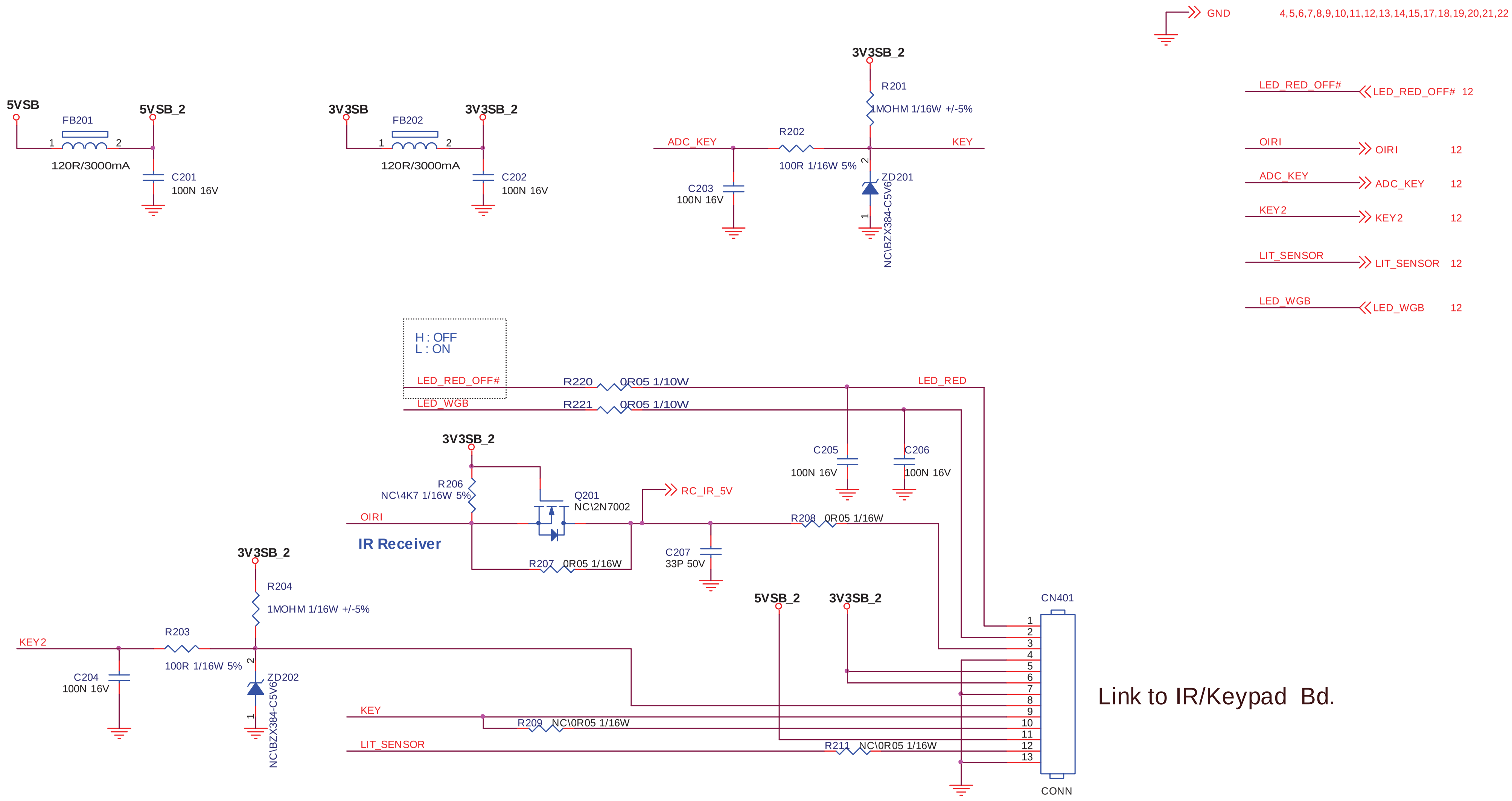

T P V (Top Victory Electronics Co . , Ltd.)		OEM MODEL	<Title>	Size	B
結 隔 瓜 細 腹	G4611-D-X-X-3-110127	TPV MODEL		Rev	M0C
Key Component	16: IR & Keypad Interface	PCB NAME		称 爹	<称爹>
Date	Wednesday, March 02, 2011	Sheet	16 of 22		

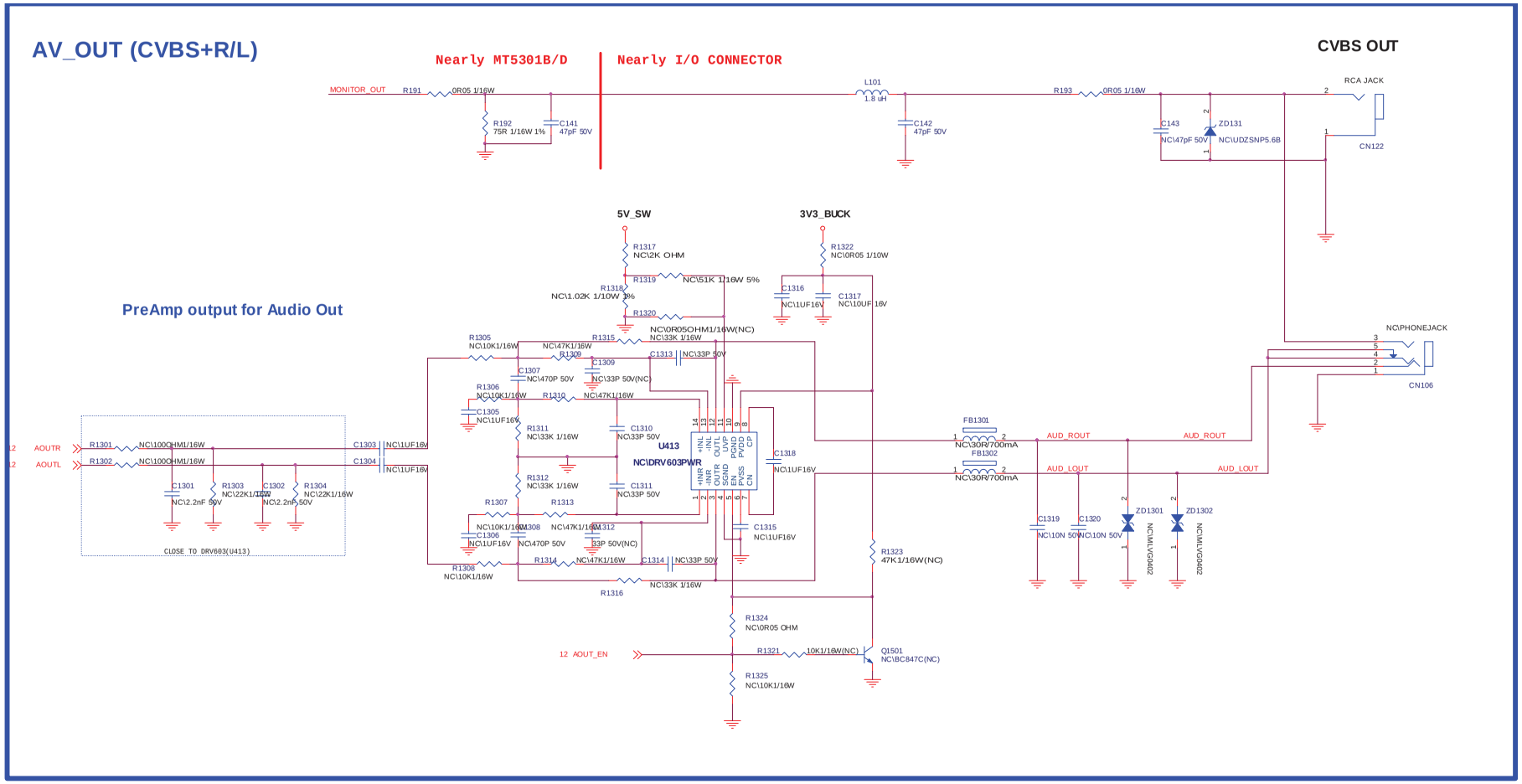

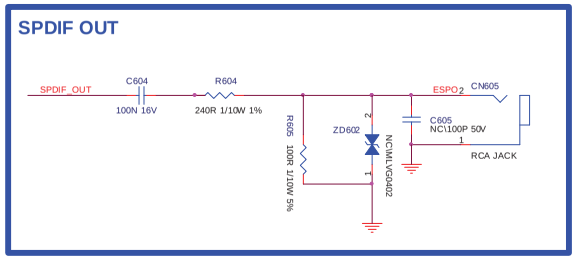

GND 4,5,6,7,8,9,10,11,12,13,14,15,16,18,19,20,21,22

MONITOR_OUT MONITOR_OUT 12

SPDIF_OUT SPDIF_OUT 8,12

T P V (Top Victory Electronics Co., Ltd.)		OEM MODEL		Size	C
結構瓜圖腹		TPV MODEL		Rev	M0C
Key Component	17_Video Out & SPDIF OUT	PCB NAME		形 著	HW4
Date	Wednesday, March 02, 2011	Sheet	17 of 22		

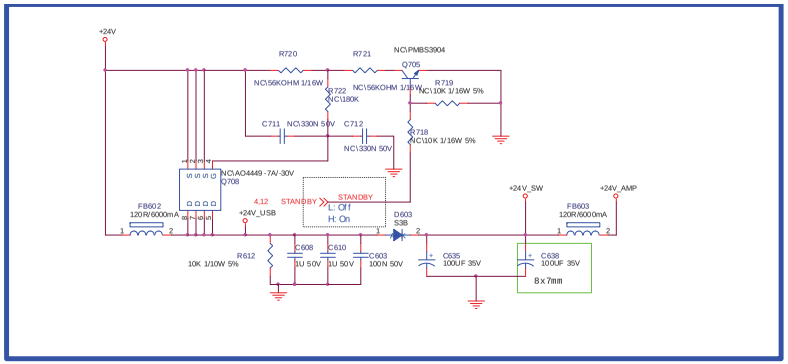

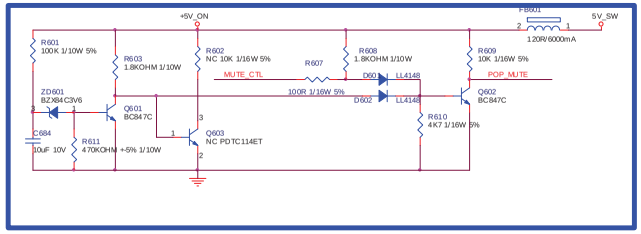

GND 4,5,6,7,8,9,10,11,12,13,14,15,16,17,19,20,21,22

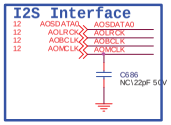

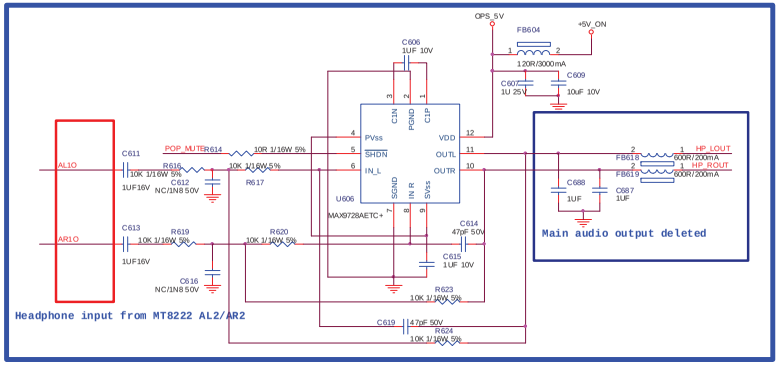

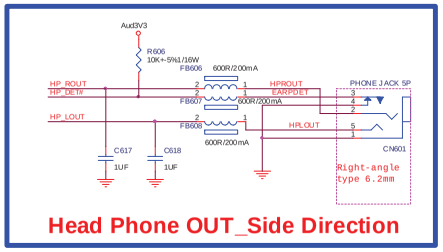

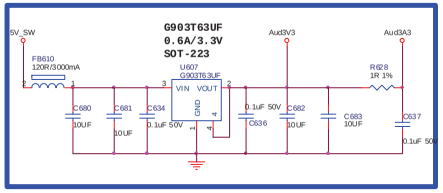

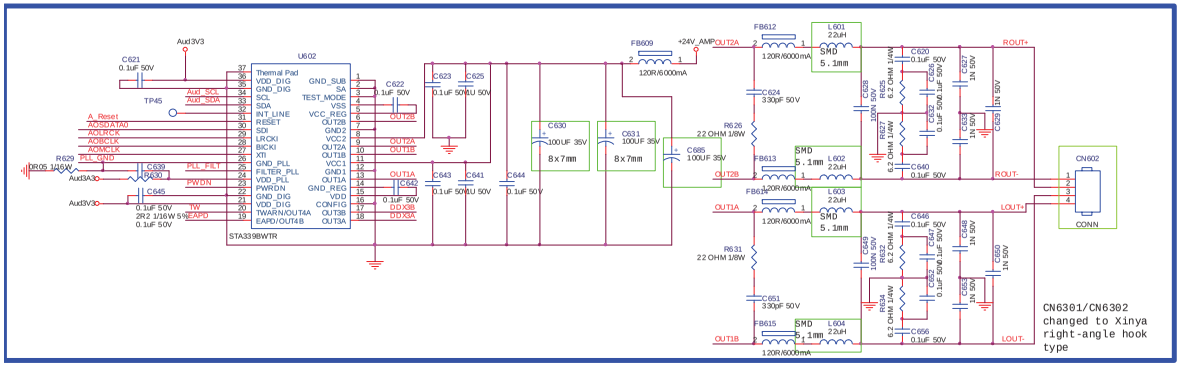

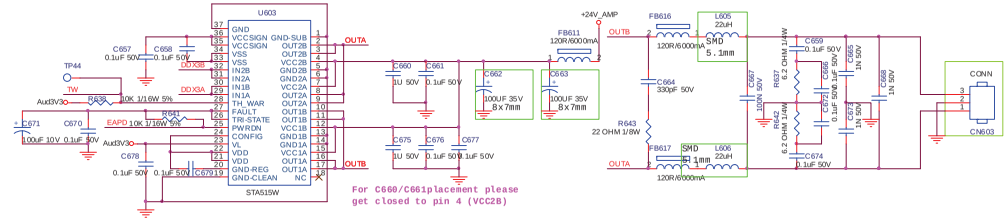

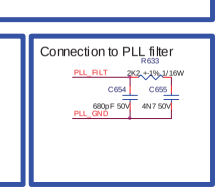

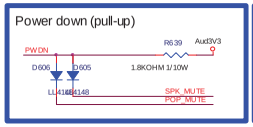

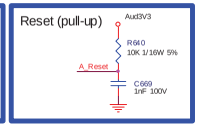

TPV (Top Victory Electronics Co., Ltd.)		OEM MODEL		Size	Custom
版权所有		TPV MODEL		Rev	M0C
Key Component	15. AUDIO AMP/HEADPHONE OUT	PCB NAME		版本	HW4 nh
Date	Wednesday, March 02, 2011	Sheet	18 of 22		

GND 4,5,6,7,8,9,10,11,12,13,14,15,16,17,18,20,21,22

POWER M81_DV33

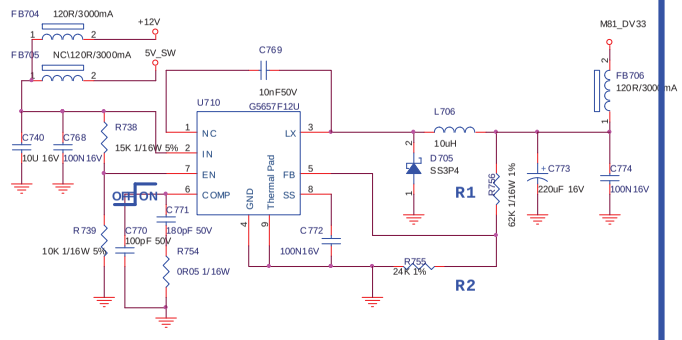

Vout =0.92x(1+R1/R2) = 0.92 x (1 + 62K/ 24K) = 3.3V

CORE POWER M81_DV11

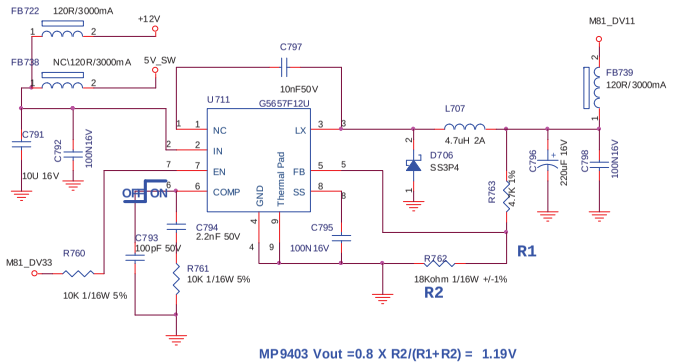

MP9403 Vout =0.8 X R2/(R1+R2) = 1.19V

G5657 Vout =0.92x(1+R1/R2) = 0.92 x (1 + 3.9K/ 18K) = 1.19V

POWER M81_AV33

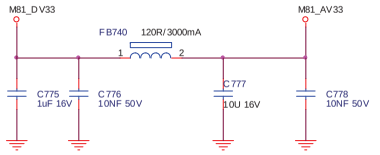

POWER M81_AV12

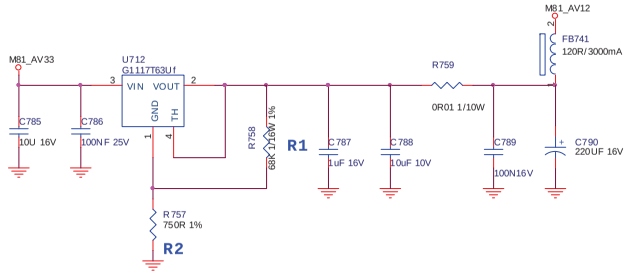

Vout = 1.25 x (1+ [R2/R1]) = 1.25 x (1 + 750/68K) = 1.2637V

DRAM Power M81_DDRV

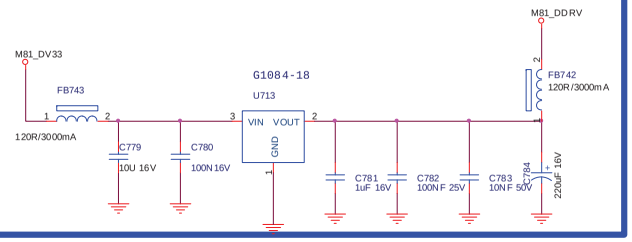

TPV (Top Victory Electronics Co., Ltd.)		OEM MODEL		Size	Custom
結隔瓜網腹		TPV MODEL		Rev	M0C
Key Component	19. MEMC DC CONVERTER	PCB NAME		称爹	HW4 nh
Date	Wednesday, March 02, 2011	Sheet	19 of 22		

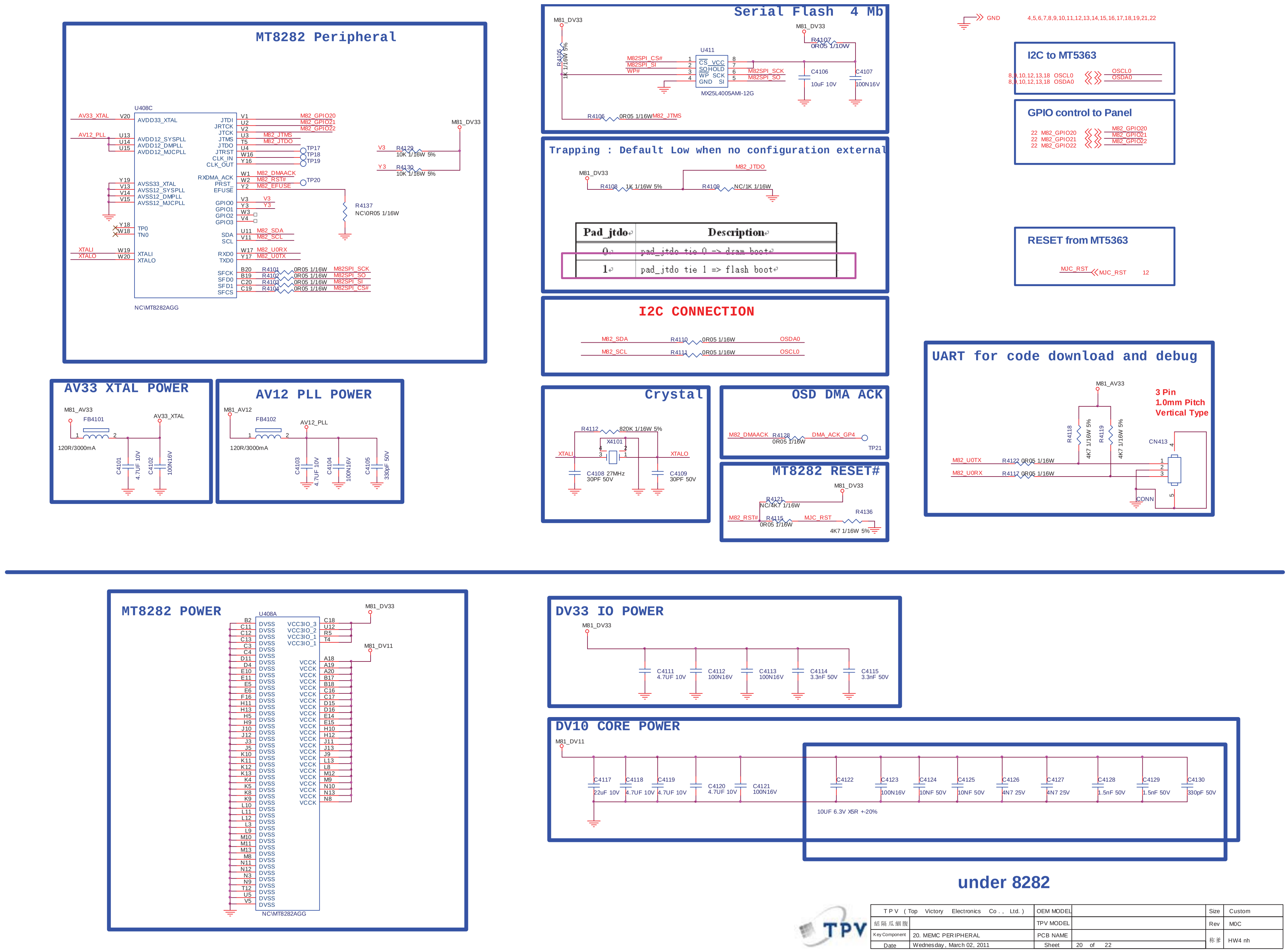
MT8282 Peripheral
AV33 XTAL POWER
AV12 PLL POWER
Serial Flash 4 Mb
Trapping : Default Low when no configuration external
Pad_jtdo
Description
0
pad_jtdo tie 0 => dram boot
1
pad_jtdo tie 1 => flash boot
I2C CONNECTION
Crystal
OSD DMA ACK
MT8282 RESET#
I2C to MT5363
GPIO control to Panel
RESET from MT5363
UART for code download and debug
3 Pin
1.0mm Pitch
Vertical Type
MT8282 POWER
DV33 IO POWER
DV10 CORE POWER
under 8282
TPV
T P V (Top Victory Electronics Co . , Ltd.)
OEM MODEL
TPV MODEL
PCB NAME
20. MEMC PERIPHERAL
Date
Wednesday, March 02, 2011
Sheet
20 of 22
Size
Custom
Rev
M0C
HW4 nh

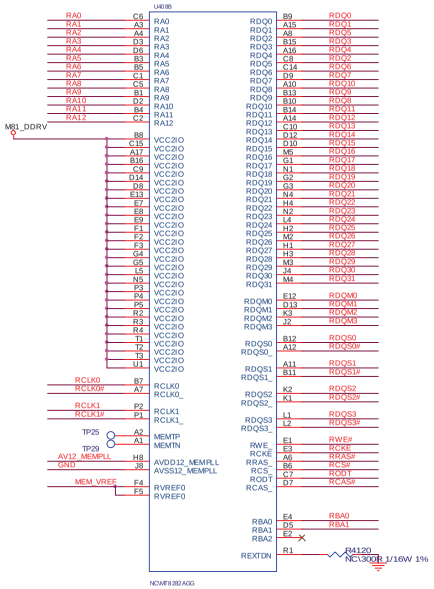

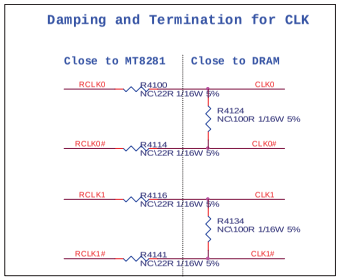

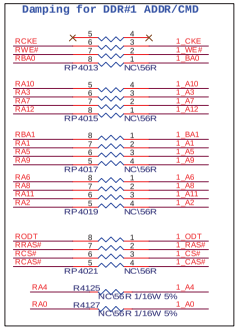

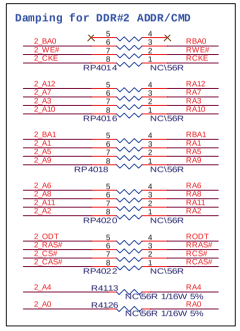

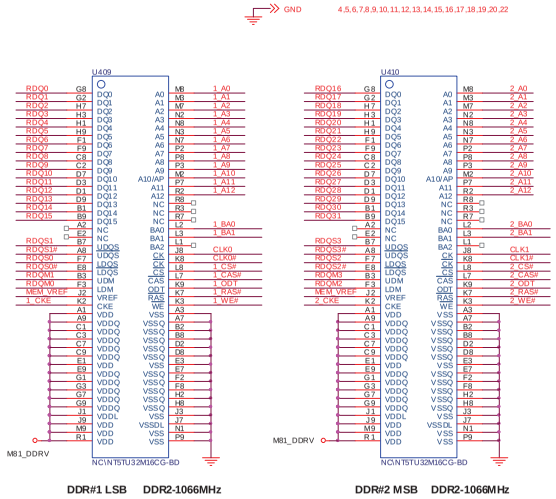

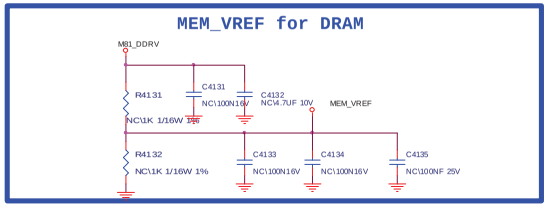

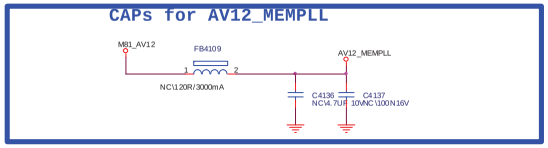

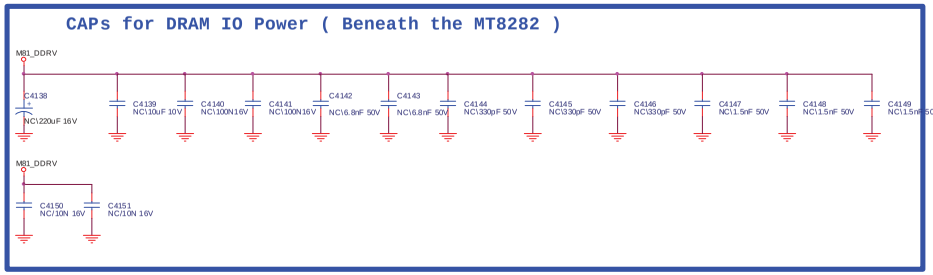

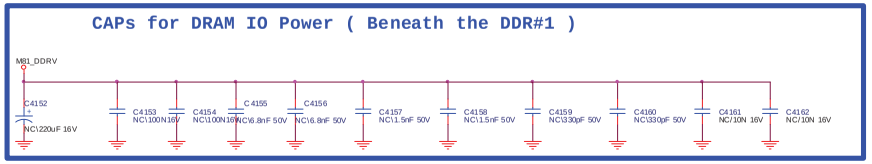

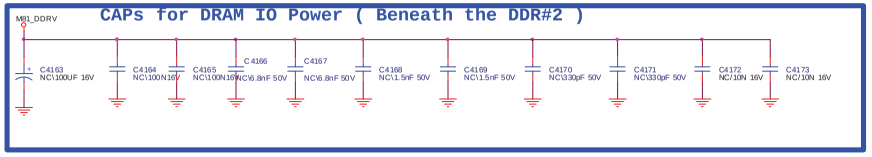

TPV (Top Victory Electronics Co., Ltd.)		OEM MODEL		Size	Custom
結構瓜頻腹		TPV MODEL		Rev	M0C
Key Component	21. MEMC DDRII	PCB NAME		修著	HW4 nh
Date	Wednesday, March 02, 2011	Sheet	21 of 22		

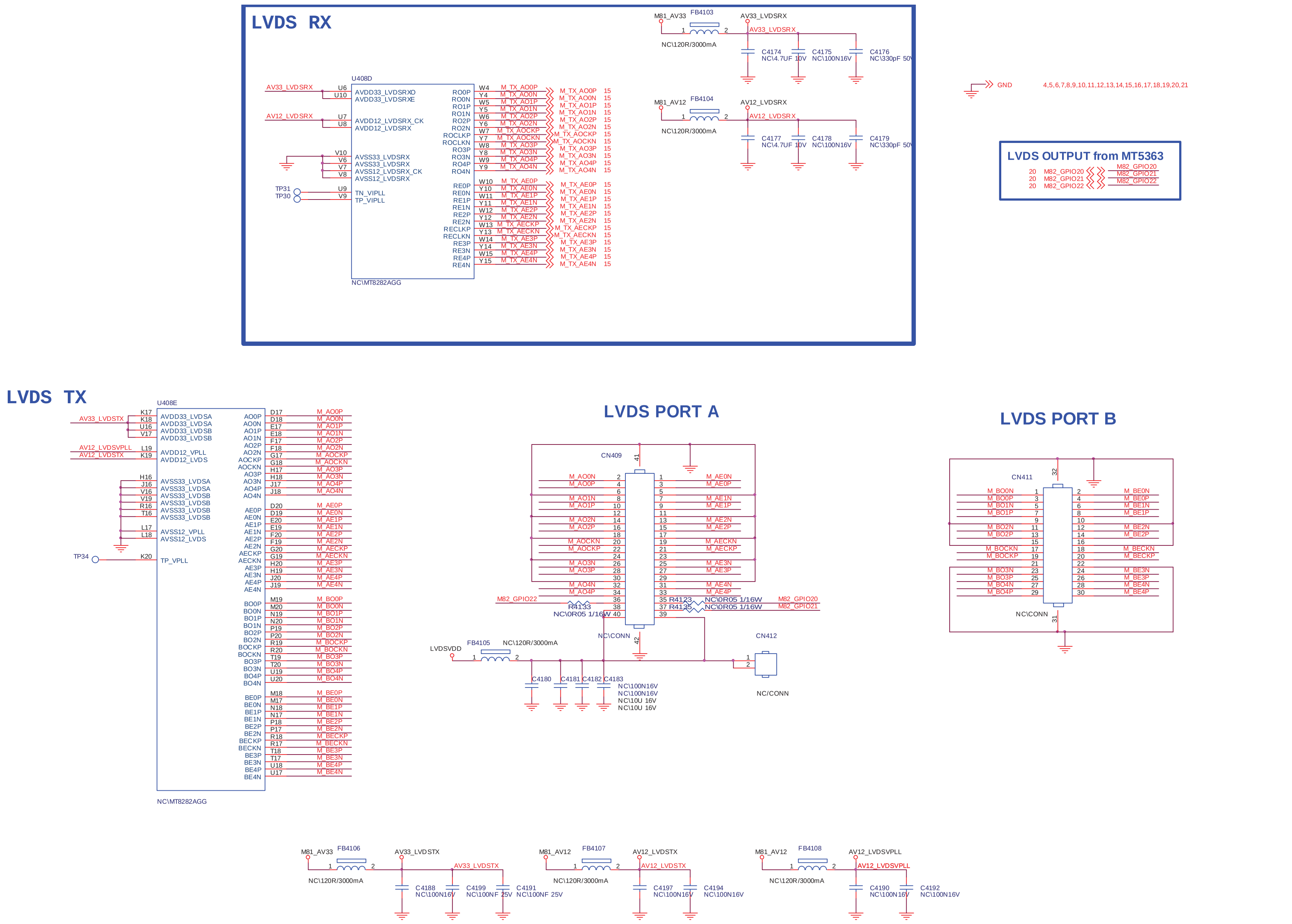

TPV (Top Victory Electronics Co., Ltd.)		OEM MODEL		Size	Custom
		TPV MODEL		Rev	M0C
Key Component	22. MEMC RX/TX	PCB NAME			HW4 nh
Date	Wednesday, March 02, 2011	Sheet	22 of 22		

6.2 电源板

32PFL3390/T3　715G4581P01W31003S

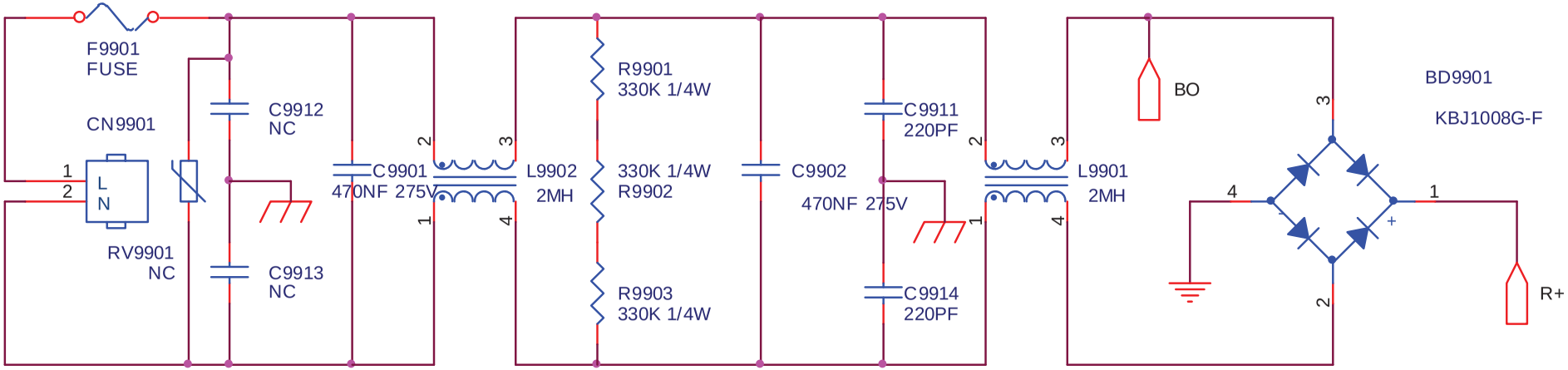

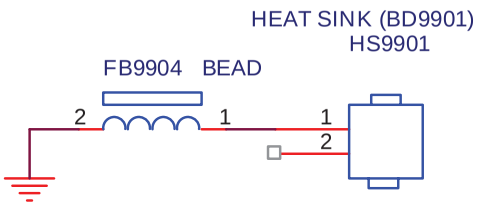

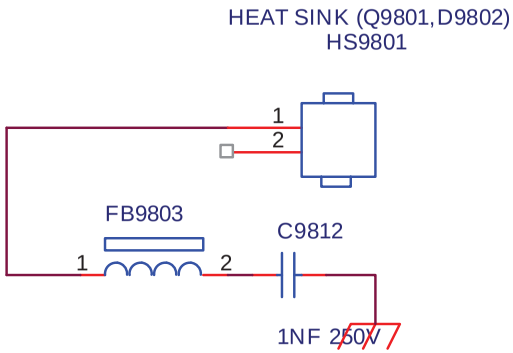

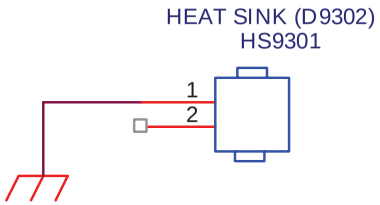

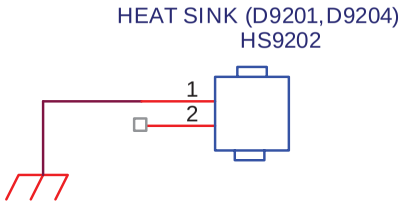

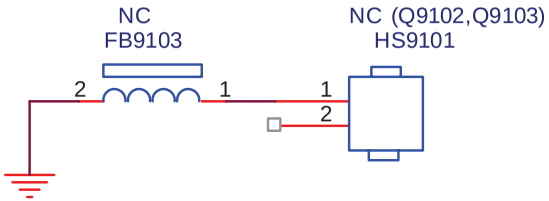

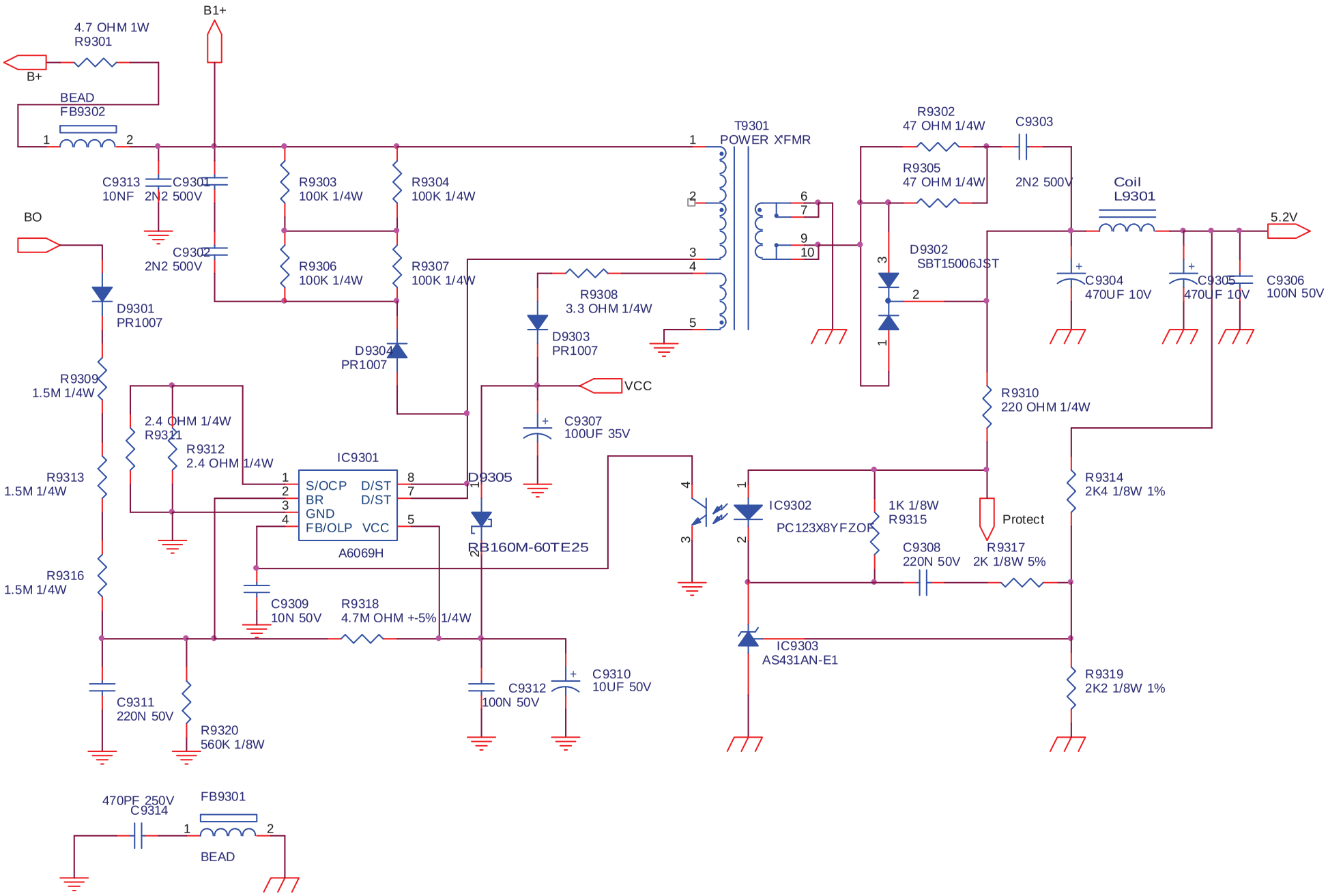
B1+
4.7 OHM 1W
R9301
B+
BEAD
FB9302
C9313
10NF
C9301
2N2 500V
C9302
2N2 500V
R9303
100K 1/4W
R9304
100K 1/4W
R9306
100K 1/4W
R9307
100K 1/4W
BO
D9301
PR1007
D9304
PR1007
R9309
1.5M 1/4W
2.4 OHM 1/4W
R9311
R9312
2.4 OHM 1/4W
R9313
1.5M 1/4W
R9316
1.5M 1/4W
IC9301
S/OCP
BR
GND
FB/OLP
D/ST
D/ST
VCC
A6069H
C9309
10N 50V
R9318
4.7M OHM +-5% 1/4W
C9311
220N 50V
R9320
560K 1/8W
T9301
POWER XFMR
R9308
3.3 OHM 1/4W
D9303
PR1007
VCC
C9307
100UF 35V
D9305
RB160M-60TE25
C9312
100N 50V
C9310
10UF 50V
R9302
47 OHM 1/4W
C9303
2N2 500V
R9305
47 OHM 1/4W
D9302
SBT15006JST
Coil
L9301
5.2V
C9304
470UF 10V
C9305
470UF 10V
C9306
100N 50V
R9310
220 OHM 1/4W
IC9302
PC123X8YFZOF
1K 1/8W
R9315
Protect
C9308
220N 50V
R9317
2K 1/8W 5%
R9314
2K4 1/8W 1%
IC9303
AS431AN-E1
R9319
2K2 1/8W 1%
470PF 250V
C9314
FB9301
BEAD

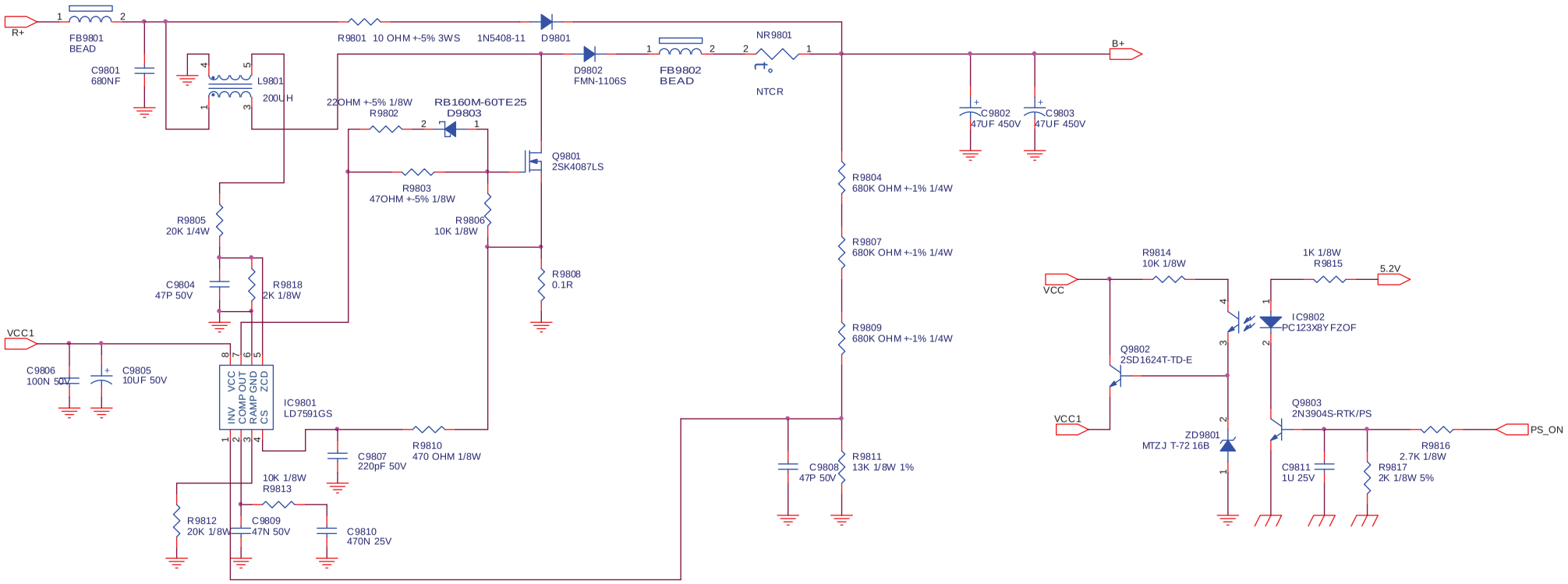
R+
FB9801
BEAD
C9801
680NF
L9801
200UH
R9801 10 OHM +-5% 3WS
1N5408-11
D9801
D9802
FMN-1106S
FB9802
BEAD
NR9801
NTCR
B+
C9802
47UF 450V
C9803
47UF 450V
22OHM +-5% 1/8W
R9802
RB160M-60TE25
D9803
Q9801
2SK4087LS
R9803
47OHM +-5% 1/8W
R9806
10K 1/8W
R9808
0.1R
R9804
680K OHM +-1% 1/4W
R9807
680K OHM +-1% 1/4W
R9809
680K OHM +-1% 1/4W
R9805
20K 1/4W
C9804
47P 50V
R9818
2K 1/8W
VCC1
C9806
100N 50V
C9805
10UF 50V
INV
COMP
RAMP
CS
VCC
OUT
GND
ZCD
IC9801
LD7591GS
R9810
470 OHM 1/8W
C9807
220pF 50V
10K 1/8W
R9813
R9812
20K 1/8W
C9809
47N 50V
C9810
470N 25V
C9808
47P 50V
R9811
13K 1/8W 1%
VCC
R9814
10K 1/8W
1K 1/8W
R9815
5.2V
IC9802
PC123X8Y FZOF
Q9802
2SD1624T-TD-E
VCC1
ZD9801
MTZJ T-72 16B
Q9803
2N3904S-RTK/PS
PS_ON
R9816
2.7K 1/8W
C9811
1U 25V
R9817
2K 1/8W 5%

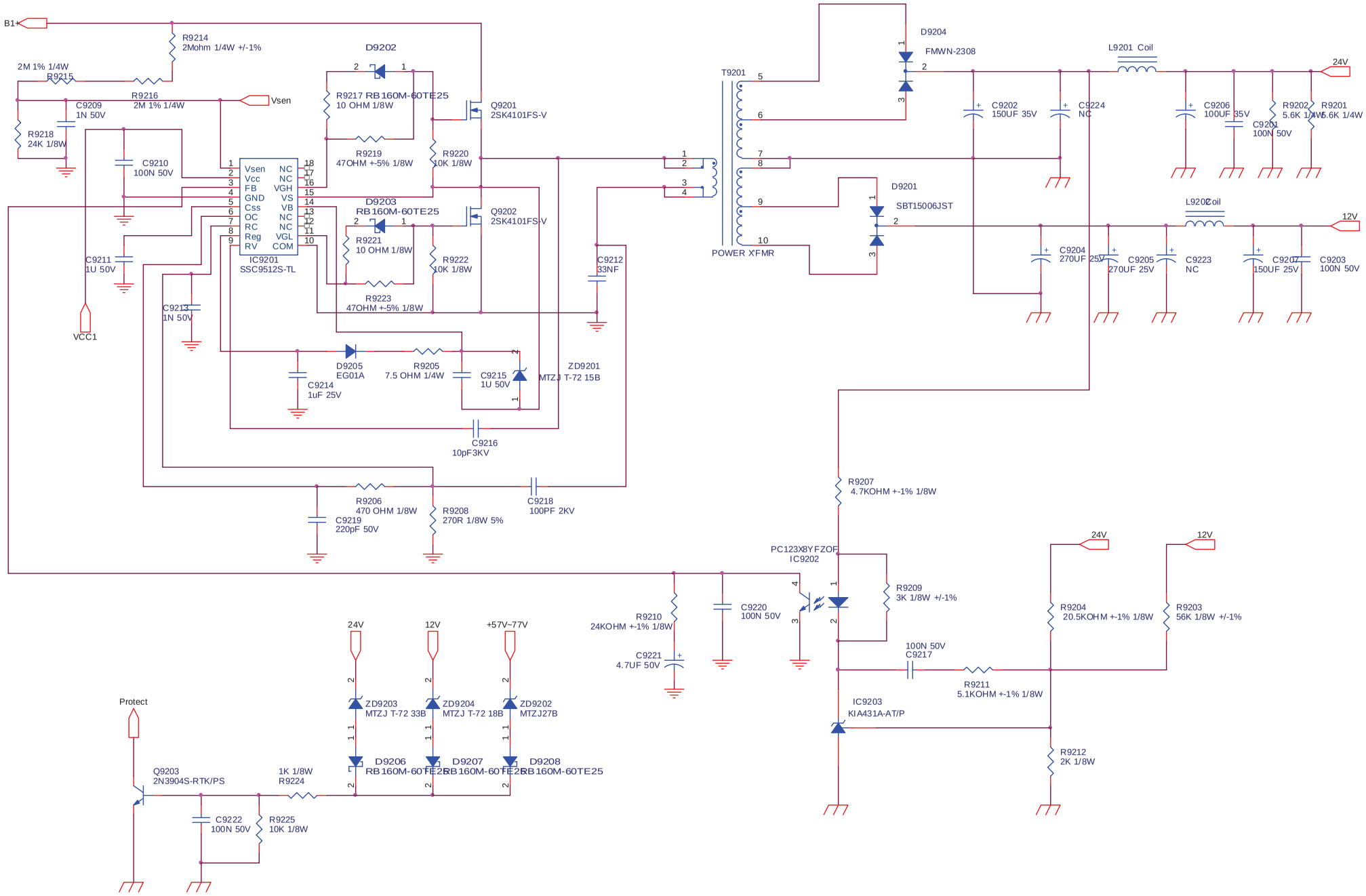
B1+
R9214
2Mohm 1/4W +/-1%
2M 1% 1/4W
R9215
R9216
2M 1% 1/4W
Vsen
C9209
1N 50V
R9218
24K 1/8W
C9210
100N 50V
C9211
1U 50V
VCC1
C9213
1N 50V
IC9201
SSC9512S-TL
Vsen
Vcc
FB
GND
Css
OC
RC
Reg
RV
NC
NC
VGH
VS
VB
NC
NC
VGL
COM
D9202
R9217 RB160M-60TE25
10 OHM 1/8W
R9219
47OHM +-5% 1/8W
Q9201
2SK4101FS-V
R9220
10K 1/8W
D9203
RB160M-60TE25
R9221
10 OHM 1/8W
Q9202
2SK4101FS-V
R9222
10K 1/8W
R9223
47OHM +-5% 1/8W
C9212
33NF
D9205
EG01A
R9205
7.5 OHM 1/4W
C9215
1U 50V
ZD9201
MTZJ T-72 15B
C9214
1uF 25V
C9216
10pF3KV
R9206
470 OHM 1/8W
C9219
220pF 50V
R9208
270R 1/8W 5%
C9218
100PF 2KV
T9201
POWER XFMR
D9204
FMWN-2308
D9201
SBT15006JST
C9202
150UF 35V
C9224
NC
L9201 Coil
24V
C9206
100UF 35V
C9201
100N 50V
R9202
5.6K 1/4W
R9201
5.6K 1/4W
L9202 Coil
12V
C9204
270UF 25V
C9205
270UF 25V
C9223
NC
C9207
150UF 25V
C9203
100N 50V
R9207
4.7KOHM +-1% 1/8W
PC123X8YFZOF
IC9202
R9209
3K 1/8W +/-1%
R9210
24KOHM +-1% 1/8W
C9220
100N 50V
C9221
4.7UF 50V
24V
12V
R9204
20.5KOHM +-1% 1/8W
R9203
56K 1/8W +/-1%
100N 50V
C9217
R9211
5.1KOHM +-1% 1/8W
IC9203
KIA431A-AT/P
R9212
2K 1/8W
24V
12V
+57V~77V
ZD9203
MTZJ T-72 33B
ZD9204
MTZJ T-72 18B
ZD9202
MTZJ27B
D9206
RB160M-60TE25
D9207
RB160M-60TE25
D9208
RB160M-60TE25
Protect
Q9203
2N3904S-RTK/PS
1K 1/8W
R9224
C9222
100N 50V
R9225
10K 1/8W

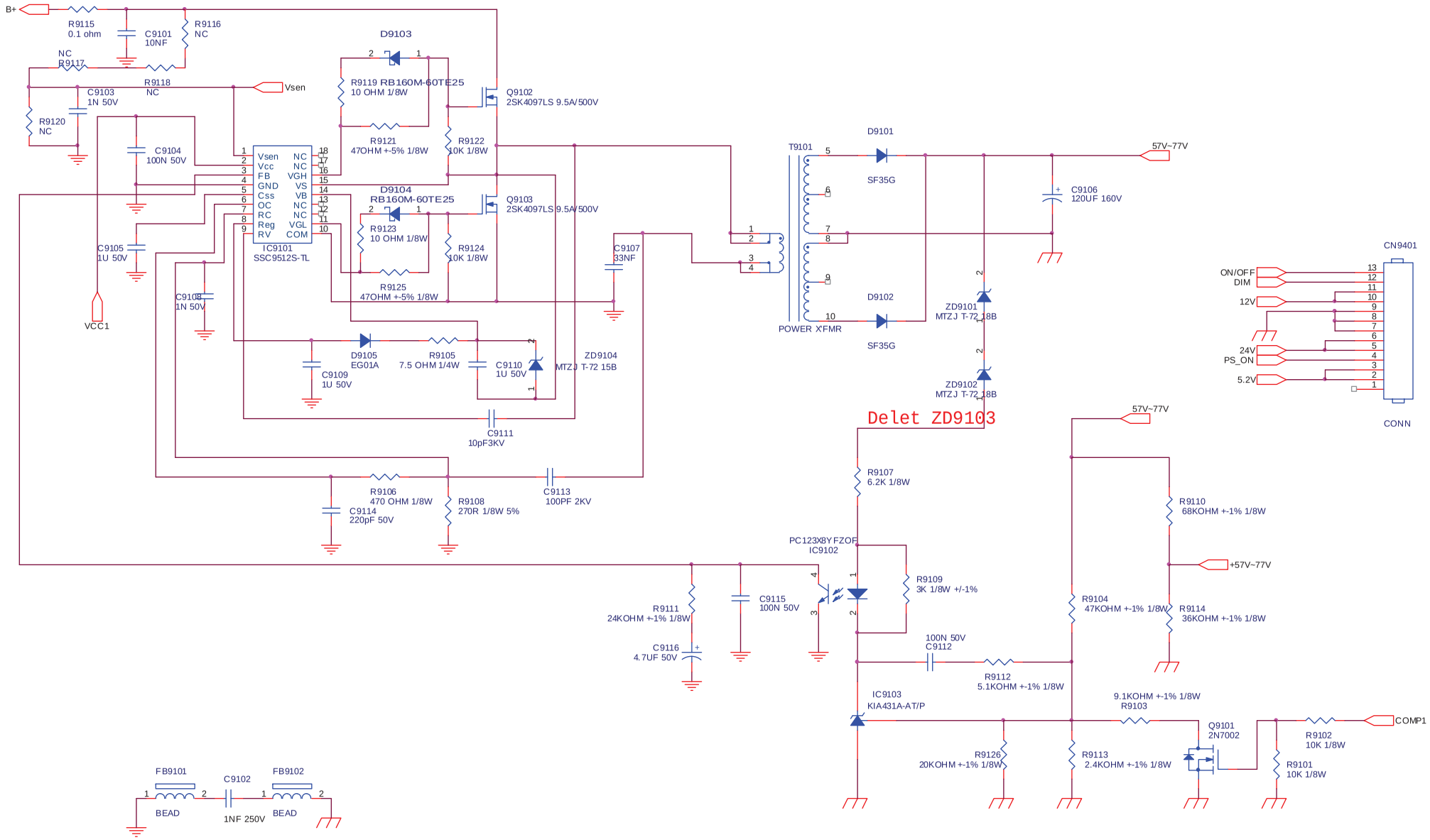
B+
R9115
0.1 ohm
C9101
10NF
R9116
NC
NC
R9117
R9118
NC
Vsen
C9103
1N 50V
R9120
NC
C9104
100N 50V
C9105
1U 50V
VCC1
C9108
1N 50V
Vsen
Vcc
FB
GND
Css
OC
RC
Reg
RV
NC
NC
VGH
VS
VB
NC
NC
VGL
COM
IC9101
SSC9512S-TL
D9103
R9119 RB160M-60TE25
10 OHM 1/8W
R9121
47OHM +-5% 1/8W
R9122
10K 1/8W
Q9102
2SK4097LS 9.5A/500V
D9104
RB160M-60TE25
R9123
10 OHM 1/8W
R9124
10K 1/8W
Q9103
2SK4097LS 9.5A/500V
R9125
47OHM +-5% 1/8W
C9107
33NF
D9105
EG01A
R9105
7.5 OHM 1/4W
C9110
1U 50V
ZD9104
MTZJ T-72 15B
C9109
1U 50V
C9111
10pF3KV
R9106
470 OHM 1/8W
C9114
220pF 50V
R9108
270R 1/8W 5%
C9113
100PF 2KV
T9101
POWER XFMR
D9101
SF35G
D9102
SF35G
57V~77V
C9106
120UF 160V
ZD9101
MTZJ T-72 18B
ZD9102
MTZJ T-72 18B
CN9401
ON/OFF
DIM
12V
24V
PS_ON
5.2V
CONN
Delet ZD9103
57V~77V
R9107
6.2K 1/8W
R9110
68KOHM +-1% 1/8W
PC123X8YFZOF
IC9102
R9109
3K 1/8W +/-1%
+57V~77V
R9111
24KOHM +-1% 1/8W
C9115
100N 50V
R9104
47KOHM +-1% 1/8W
R9114
36KOHM +-1% 1/8W
C9116
4.7UF 50V
100N 50V
C9112
R9112
5.1KOHM +-1% 1/8W
IC9103
KIA431A-AT/P
9.1KOHM +-1% 1/8W
R9103
Q9101
2N7002
COMP1
R9102
10K 1/8W
R9126
20KOHM +-1% 1/8W
R9113
2.4KOHM +-1% 1/8W
R9101
10K 1/8W
FB9101
BEAD
C9102
1NF 250V
FB9102
BEAD

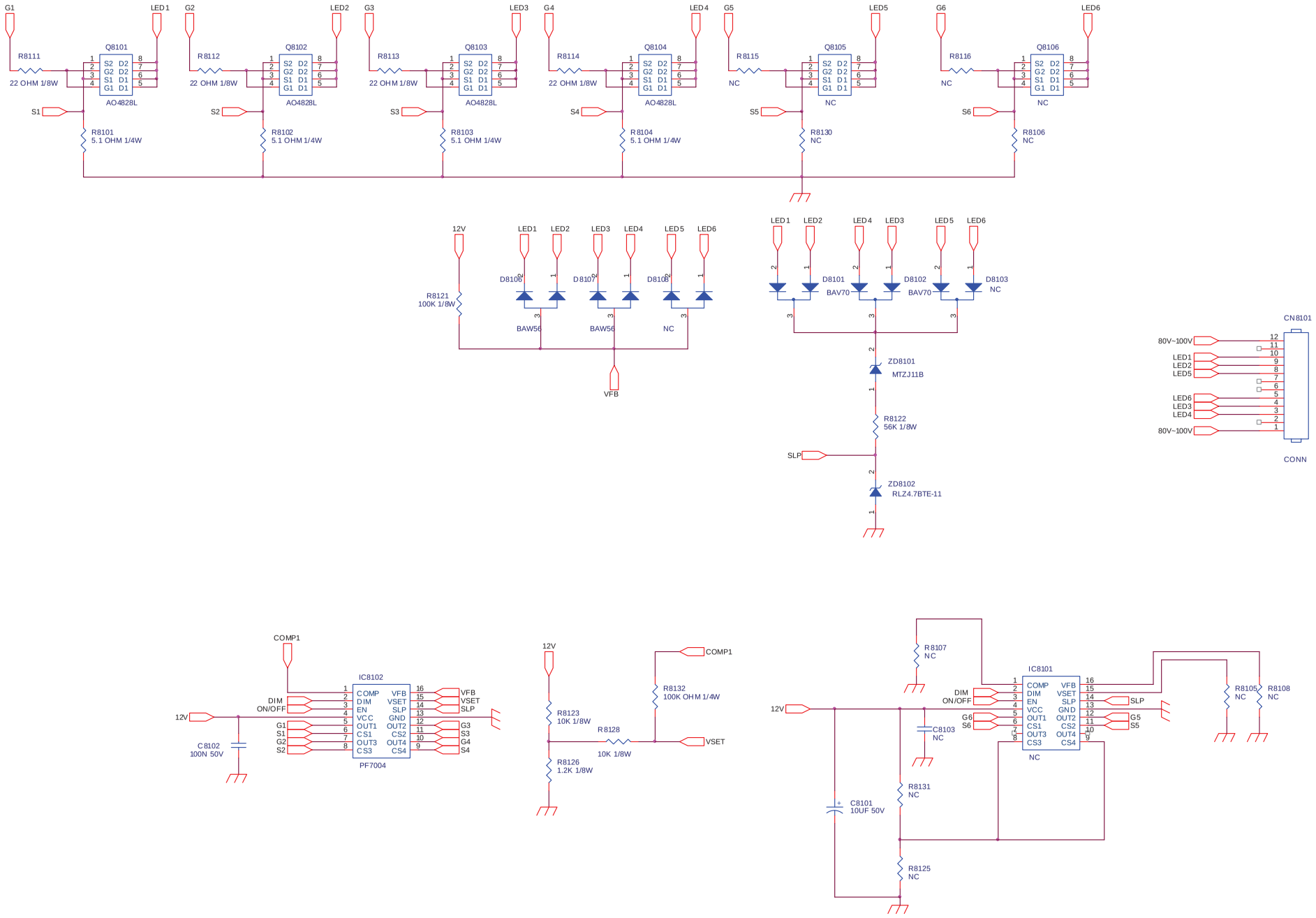
G1
LED1
G2
LED2
G3
LED3
G4
LED4
G5
LED5
G6
LED6
R8111
22 OHM 1/8W
Q8101
AO4828L
S1
R8101
5.1 OHM 1/4W
R8112
22 OHM 1/8W
Q8102
AO4828L
S2
R8102
5.1 OHM 1/4W
R8113
22 OHM 1/8W
Q8103
AO4828L
S3
R8103
5.1 OHM 1/4W
R8114
22 OHM 1/8W
Q8104
AO4828L
S4
R8104
5.1 OHM 1/4W
R8115
NC
Q8105
NC
S5
R8130
NC
R8116
NC
Q8106
NC
S6
R8106
NC
12V
R8121
100K 1/8W
D8106
D8107
D8108
BAW56
BAW56
NC
VFB
D8101
BAV70
D8102
BAV70
D8103
NC
ZD8101
MTZJ11B
R8122
56K 1/8W
SLP
ZD8102
RLZ4.7BTE-11
CN8101
80V~100V
LED1
LED2
LED5
LED6
LED3
LED4
80V~100V
CONN
COMP1
IC8102
DIM
ON/OFF
12V
C8102
100N 50V
COMP
DIM
EN
VCC
OUT1
CS1
OUT3
CS3
VFB
VSET
SLP
GND
OUT2
CS2
OUT4
CS4
G1
S1
G2
S2
G3
S3
G4
S4
PF7004
12V
R8123
10K 1/8W
R8126
1.2K 1/8W
R8128
10K 1/8W
COMP1
R8132
100K OHM 1/4W
VSET
R8107
NC
IC8101
DIM
ON/OFF
12V
C8103
NC
G6
S6
SLP
G5
S5
NC
R8105
NC
R8108
NC
C8101
10UF 50V
R8131
NC
R8125
NC

42PFL3390/T3 715G4878P01H20003M

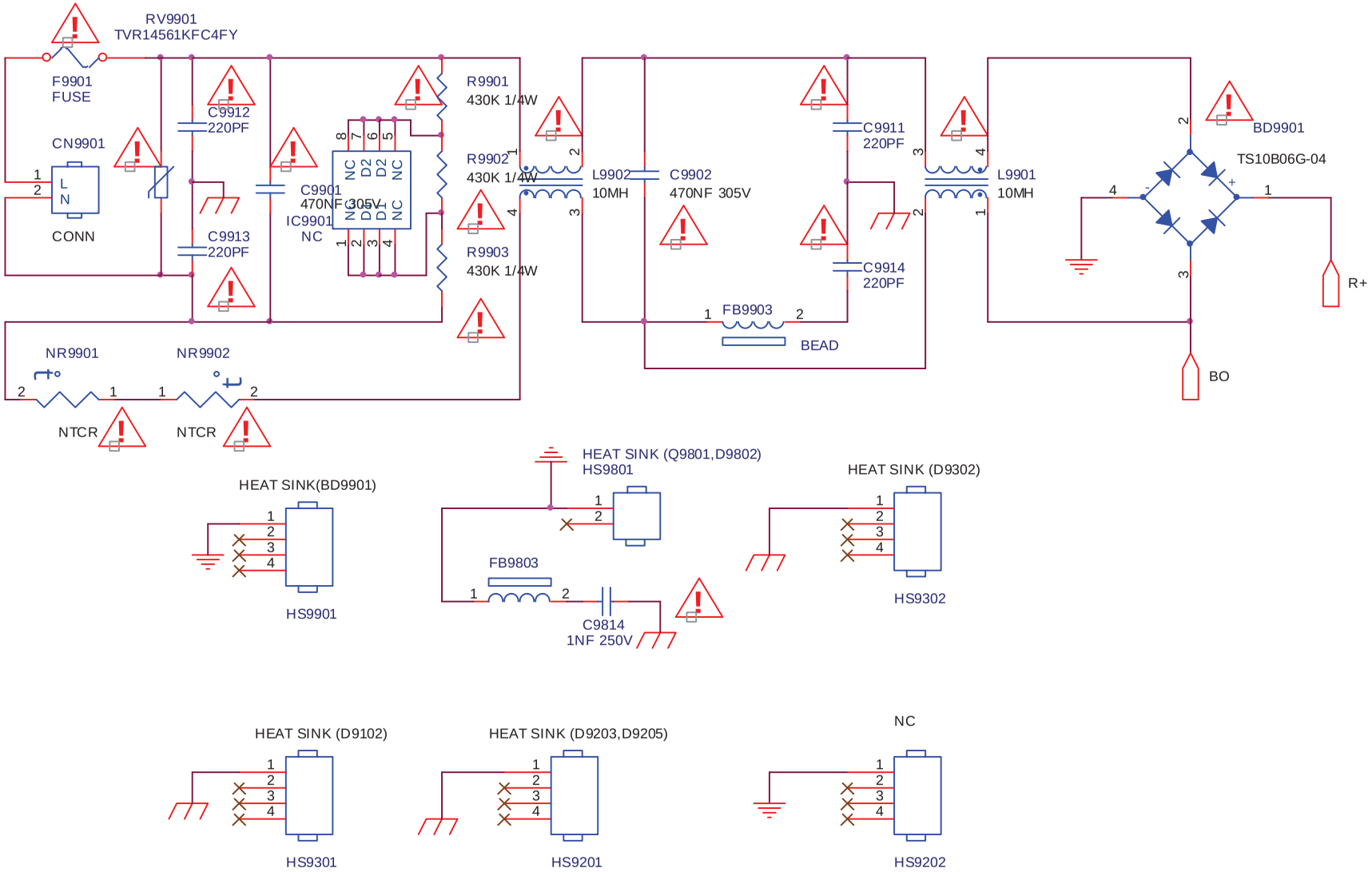

T P V (Top Victory Electronics Co . , Ltd.)		OEM MODEL		Size	A
結隔瓜細腹		TPV MODEL		Rev	A
Key Component	2.AC SIDE	PCB NAME	715G4878	称爹	<称爹>
Date	Tuesday , March 15, 2011	Sheet	2 of 8		

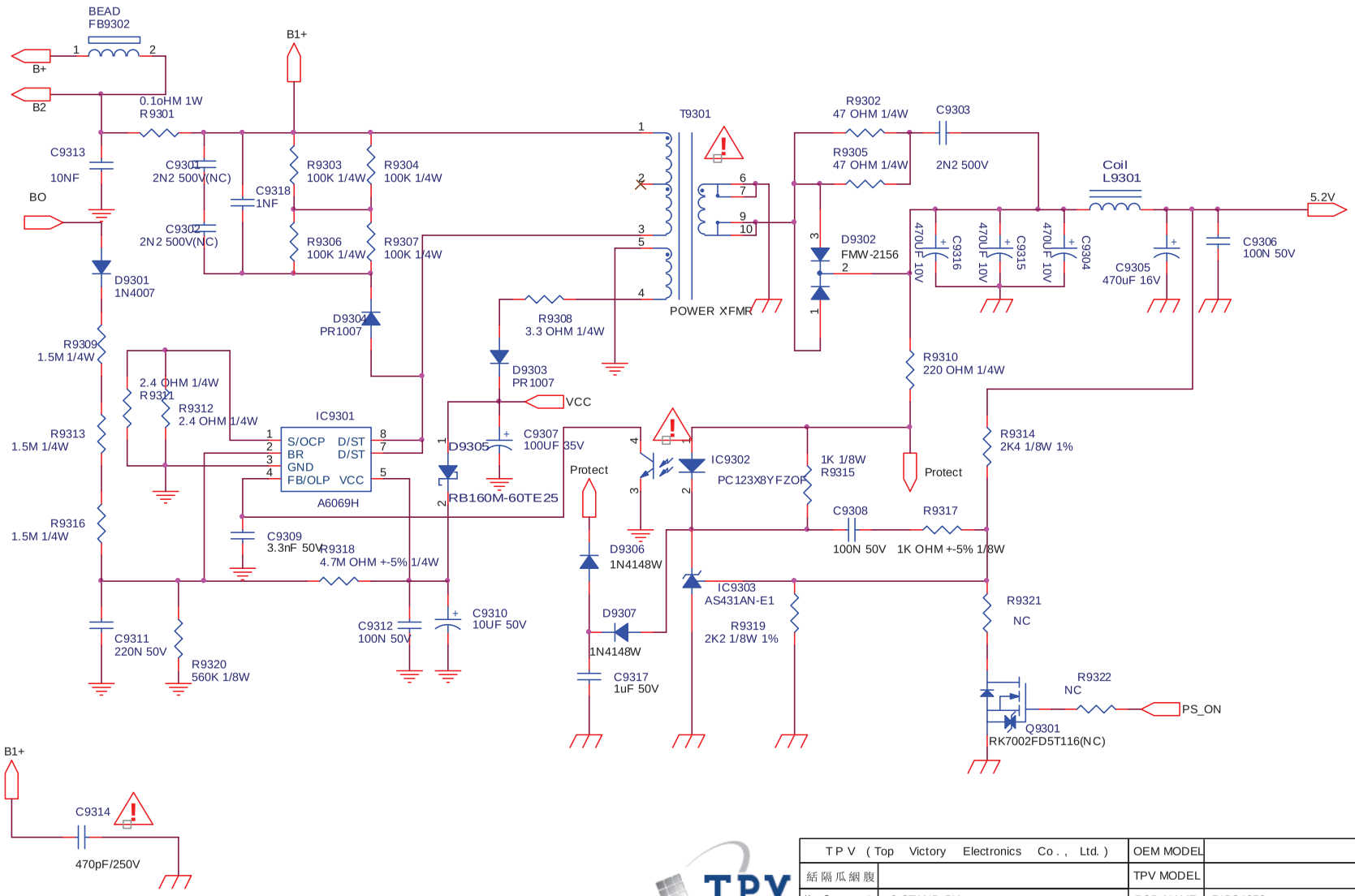

TPV (Top Victory Electronics Co., Ltd.)		OEM MODEL		Size	B
結隔瓜綑腹		TPV MODEL		Rev	A
Key Component	3.STAND BY	PCB NAME	715G4878	称爹	<称爹>
Date	Tuesday, March 15, 2011	Sheet	3 of 8		

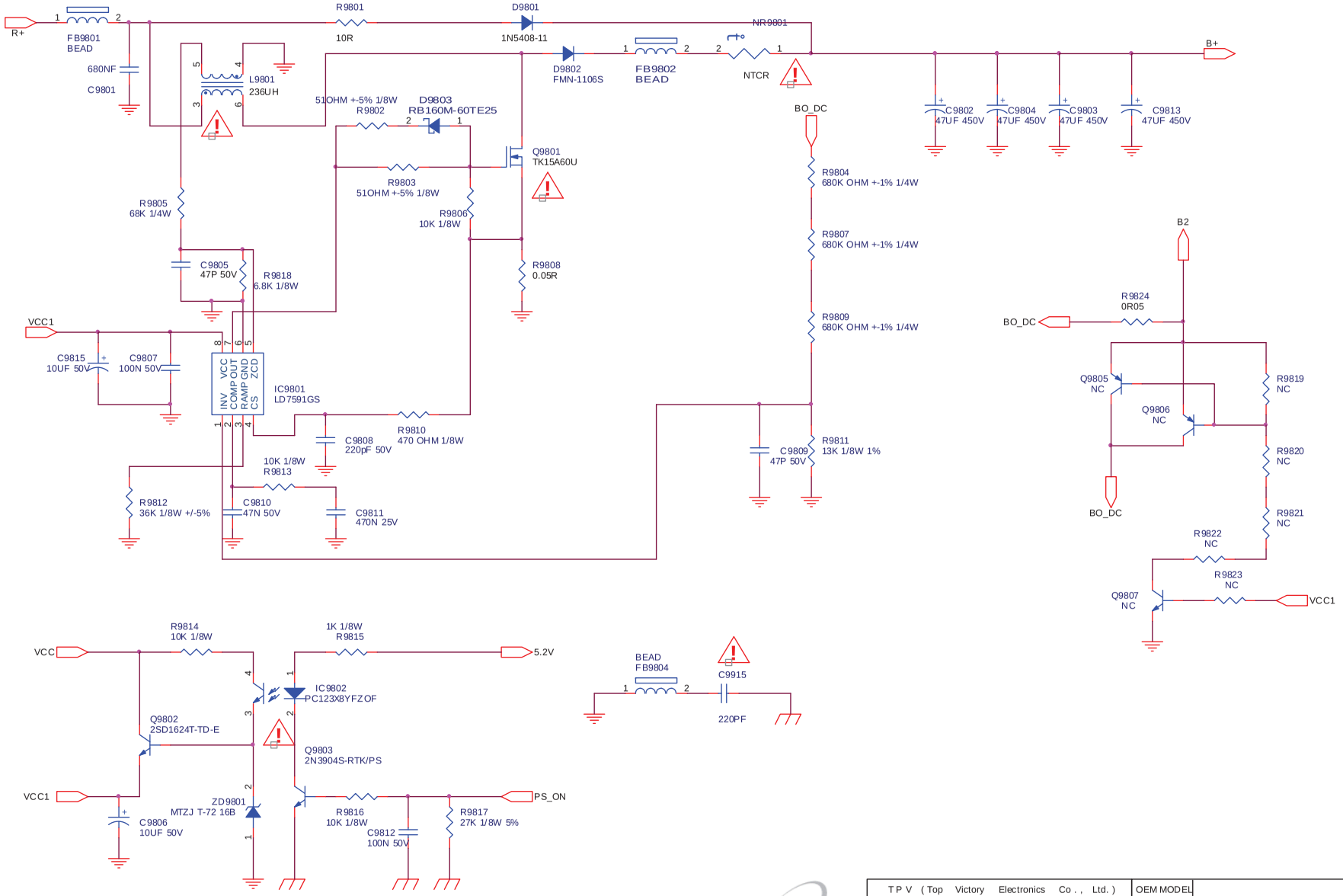

TPV (Top Victory Electronics Co., Ltd.)		OEM MODEL		Size	B
結隔瓜綱腹		TPV MODEL		Rev	A
Key Component	4.DCM PFC	PCB NAME	715G4878	称爹	<称爹>
Date	Tuesday, March 15, 2011	Sheet	4 of 8		

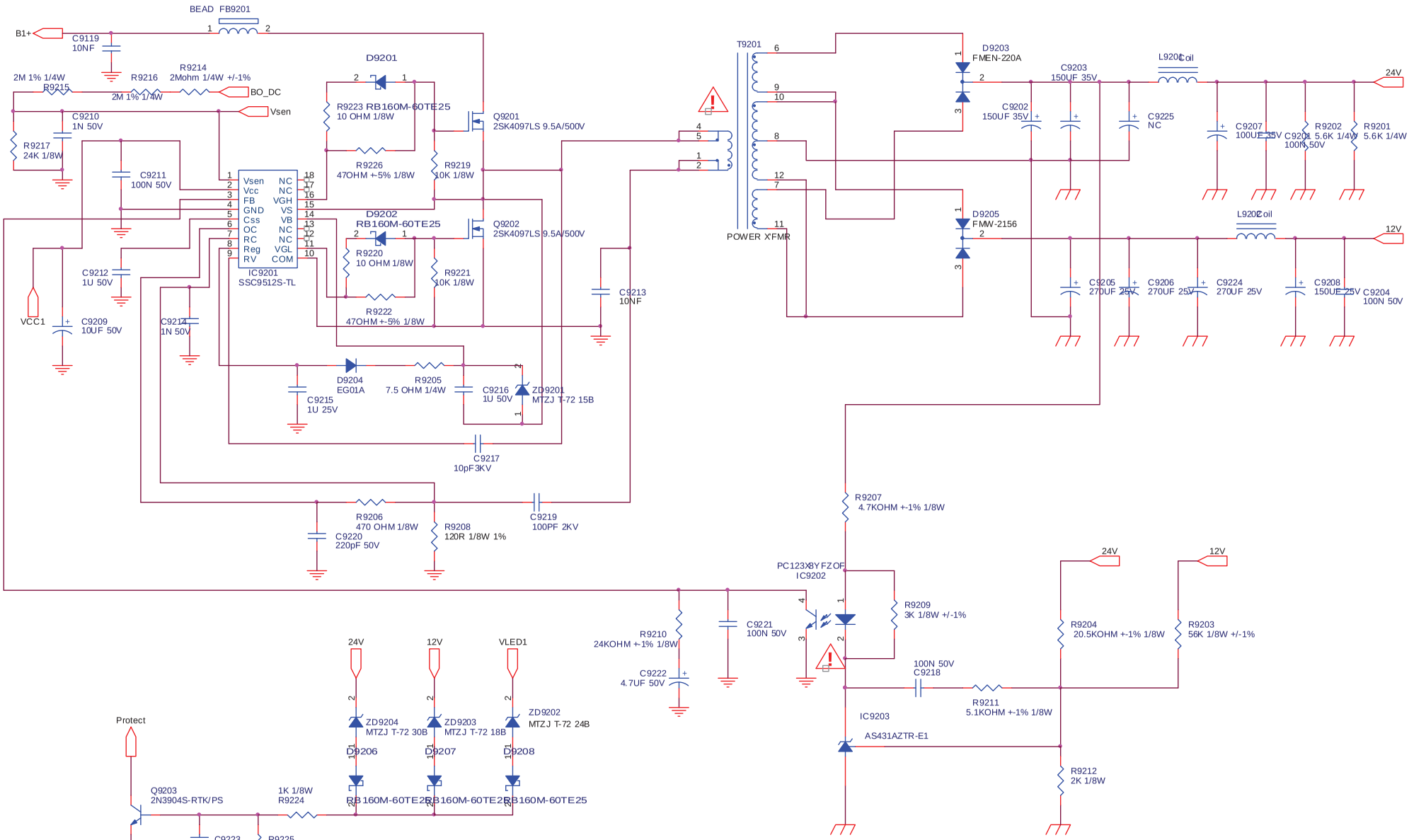

TPV (Top Victory Electronics Co., Ltd.)		OEM MODEL		Size	B
結隔瓜綑腹		TPV MODEL		Rev	A
Key Component	5.SECOND POWER	PCB NAME	715G4878	称爹	<称爹>
Date	Tuesday, March 15, 2011	Sheet	5 of 8		

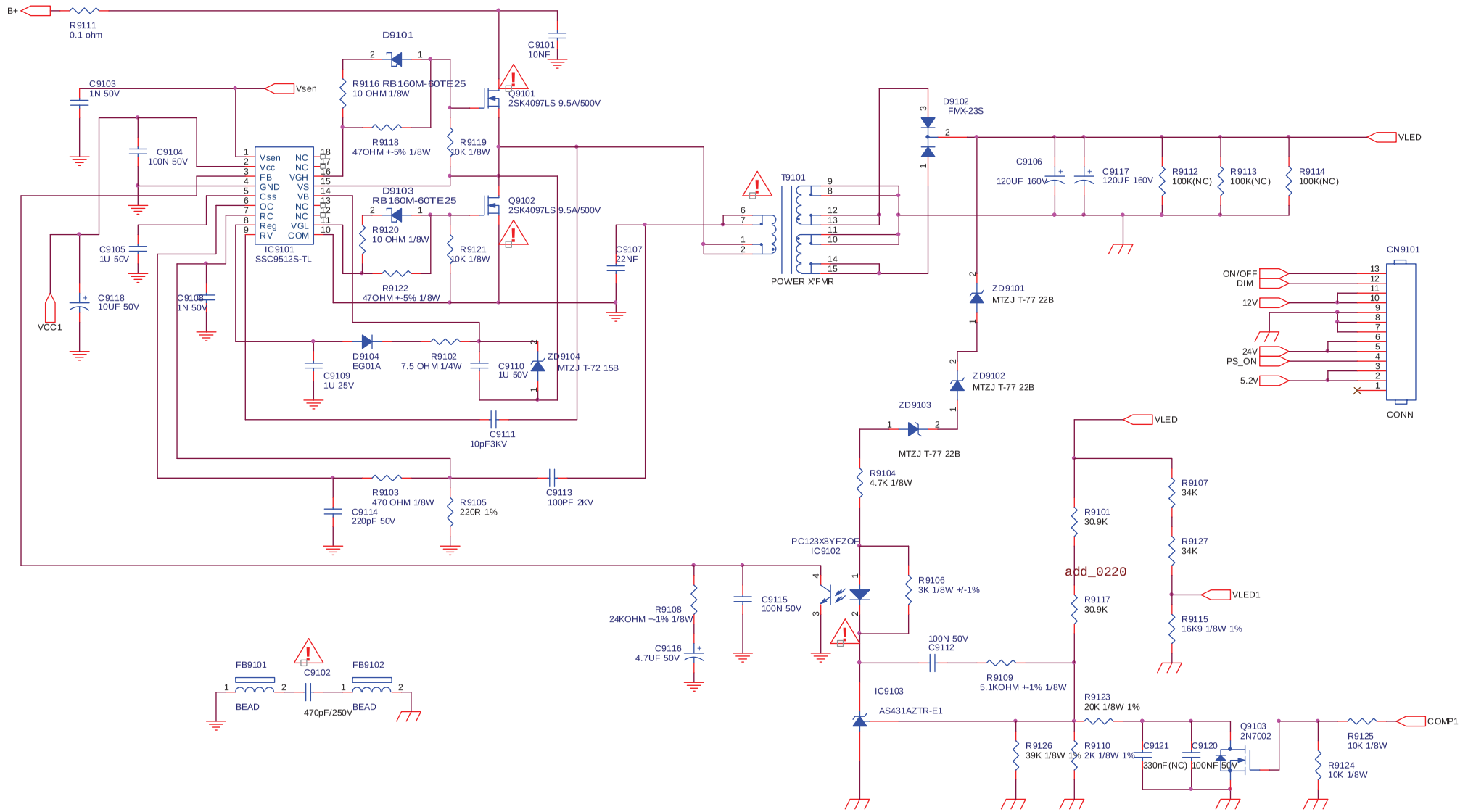

TPV (Top Victory Electronics Co., Ltd.)		OEM MODEL		Size	B
結隔瓜綱腹		TPV MODEL		Rev	A
Key Component	6.MAIN POWER	PCB NAME	715G4878	称爹	<称爹>
Date	Tuesday, March 15, 2011	Sheet	6 of 8		

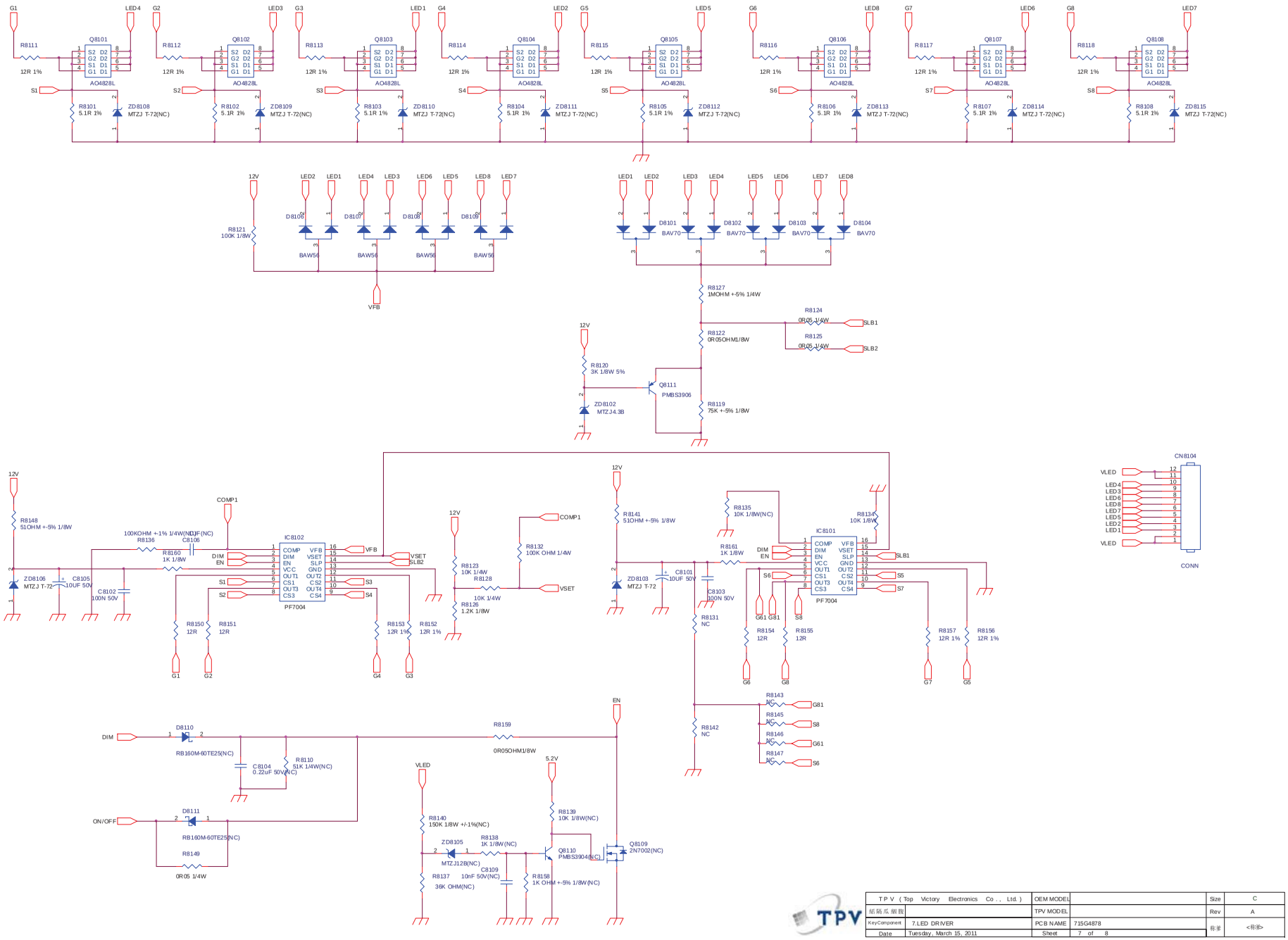

TPV (Top Victory Electronics Co., Ltd.)		OEM MODEL		Size	C
硕阳瓜烟腹		TPV MODEL		Rev	A
KeyComponent	7.LED DRIVER	PCB NAME	715G4878	称著	<称著>
Date	Tuesday, March 15, 2011	Sheet	7 of 8		

6.3 倍频板

715G4858T01000004S

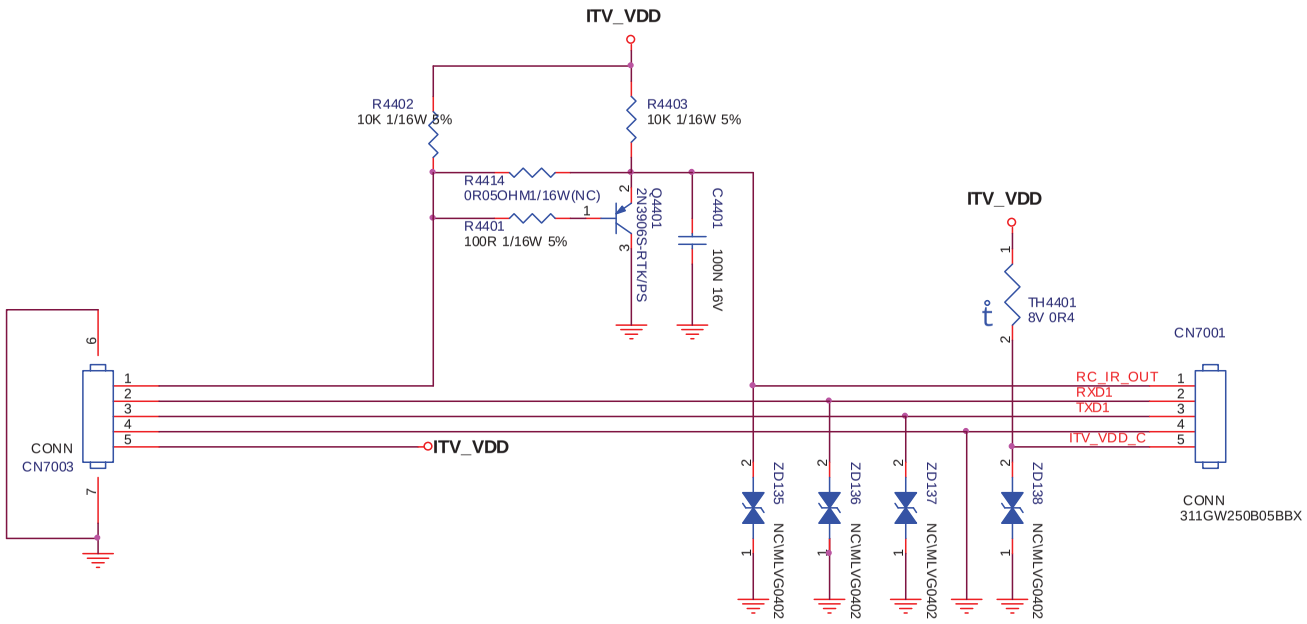

TPV (Top Victory Electronics Co., Ltd.)		OEM MODEL		Size	Custom
結隔瓜綢腹	G4858-A-X-X-1-101220	TPV MODEL		Rev	A
Key Component	01. COVER	PCB NAME		称爹	HW4
Date	Monday, December 20, 2010	Sheet	1 of 1		

6.4 按键板

715G4496K02000004M

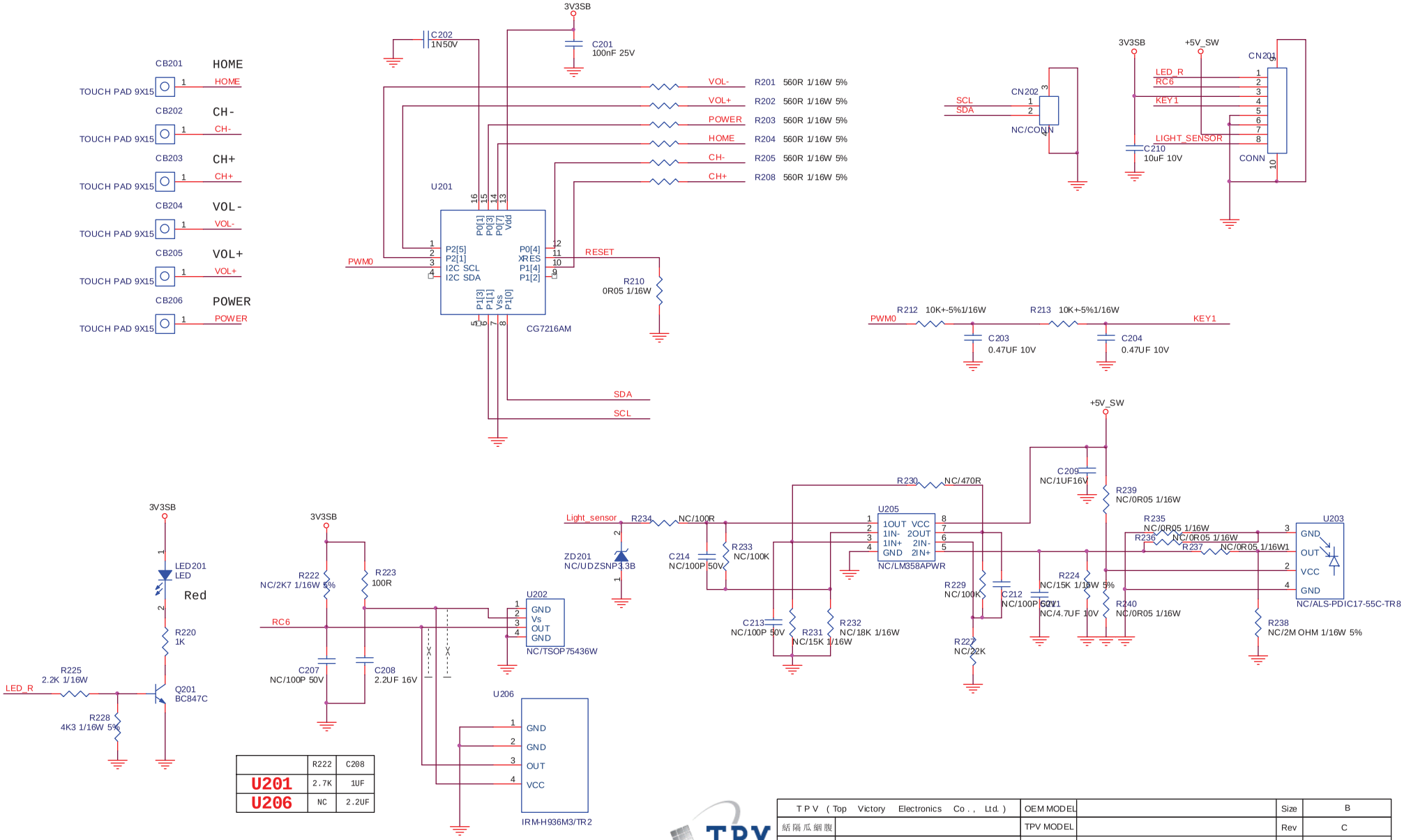

	R222	C208
U201	2.7K	1UF
U206	NC	2.2UF

TPV (Top Victory Electronics Co., Ltd.)		OEM MODEL		Size	B
結隔瓜綢腹		TPV MODEL		Rev	C
Key Component	2.0.IR/Key	PCB NAME	715G4496	称爹	<称爹>
Date	Tuesday, June 28, 2011	Sheet	1 of 1		