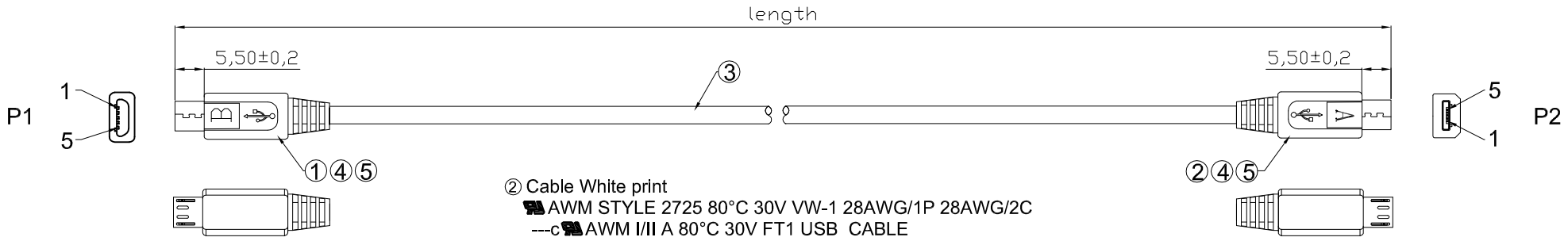

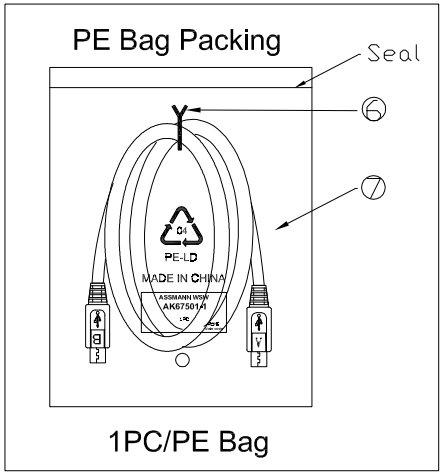

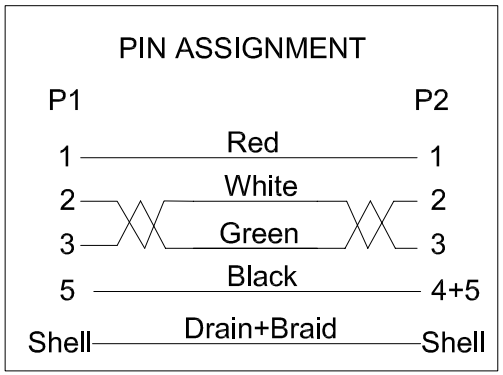

	WSW P/N	Jacket color	Length(mm)
①	AK67501-0.5	Black	500±20
	AK67501-1	Black	1000±20
	AK67501-2	Black	2000±20
	AK67501-3	Black	3000±30
	AK67501-5	Black	5000±50

Electrical test:
1. 100% short, open, miss wire test
2. Conduct resistance: 2 Ohm max.
3. Insulator resistance: 10Mohm min.
4. Dielectric test: DC 300V

NO.	NAME.	SPECIFICATION	Q'TY	Unit
⑦	PE Bag	Clear Print black "MADE IN CHINA"+ "1PC"	1	PCS
⑥	TIE	Black	1	PCS
⑤	Over Mold	Black PVC-45P	NA	G
④	Inner Mold	PE	NA	G
③	Cable	USB2.0 UL2725 (28#*1P+AL)+28#/2C+AEB Black OD:3.5mm	NA	M
②	CONN	USB 2.0 Micro 5P A Male Shell:Nickel Pin:G/F Insulator color: black	1	PCS
①	CONN	USB 2.0 Micro 5P B Male Shell:Nickel Pin:G/F Insulator color: black	1	PCS

RoHS compliant
Unit: mm

Scale	FREE
TOLERANCE	
DIM	TOL
Angle	TOL

Id.	Modification	Date	Name
②	Update	15.08.2016	Amy
①	Add P/N	10.11.2015	Joanna
⓪	Drawn	24.10.2014	Winnie

	Date	Name
Drawn	24.10.2014	Winnie
Approved	15.08.2016	Amy

ASSMANN wsw components

Customer-No.

ASSMANN WSW-No. AK67501-x

Drawing-No. ASS 7249 CA

rev02

Replace

Sheet