AML PUSHBUTTON AND INDICATOR SERIES

SOLID STATE SWITCH AML 10 SERIES

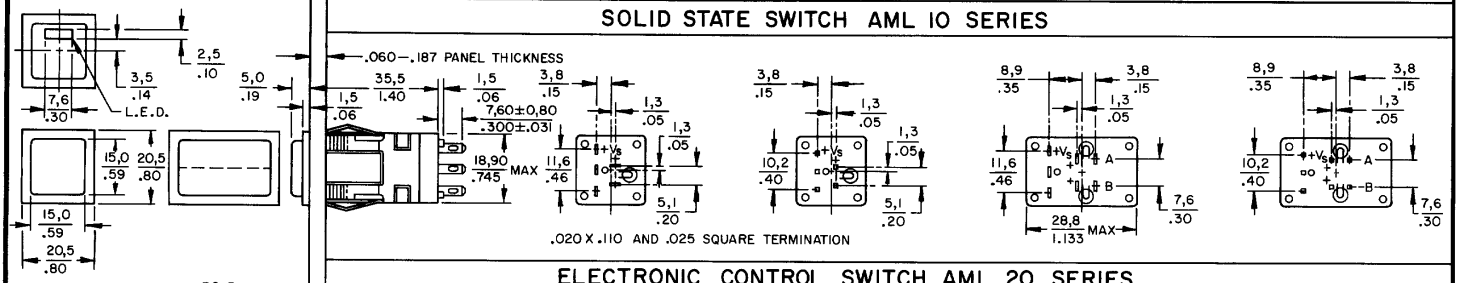

ELECTRONIC CONTROL SWITCH AML 20 SERIES

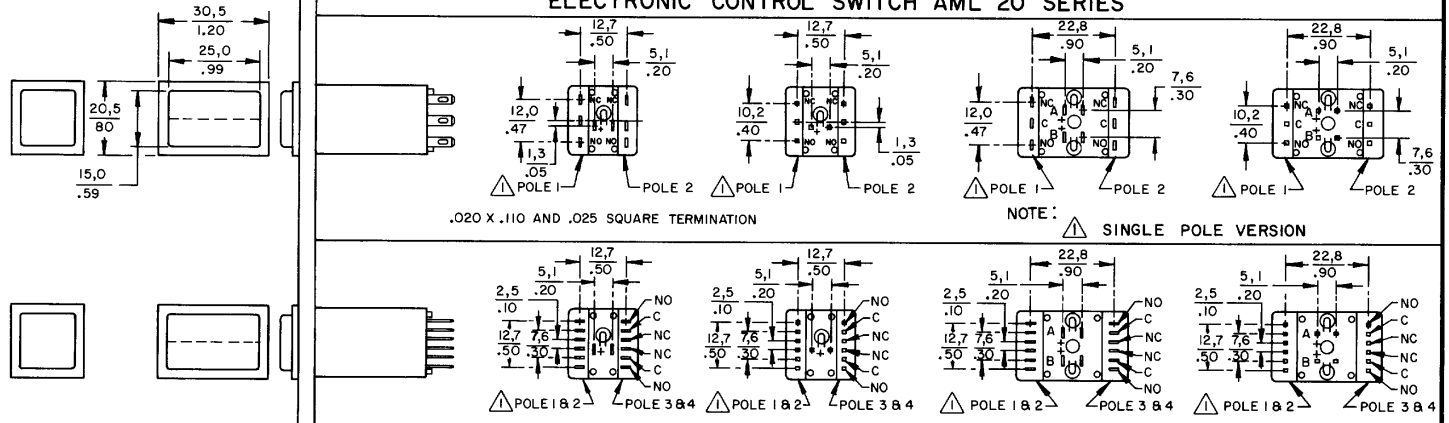

POWER SWITCH AML 30 SERIES

LINE POWER IND AML 43 SERIES

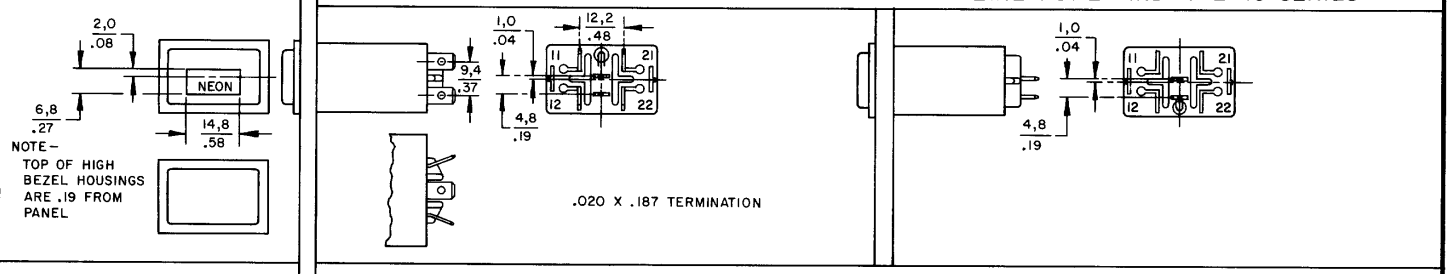

INDICATORS AML 40 SERIES

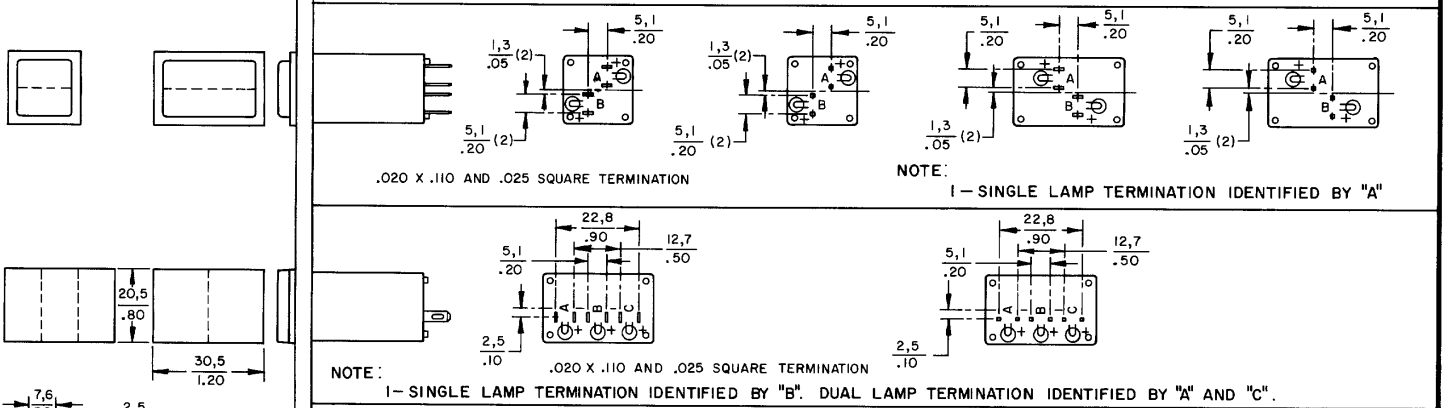

PANEL CUTOUTS

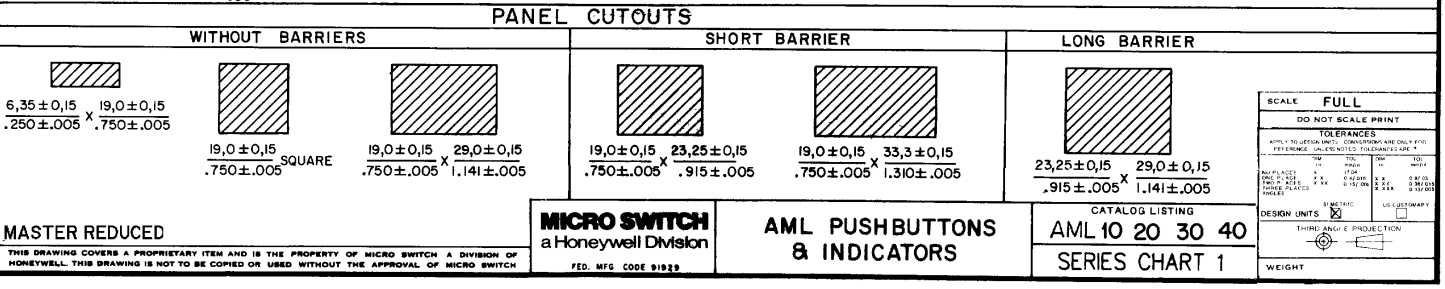

MASTER REDUCED

THIS DRAWING COVERS A PROPRIETARY ITEM AND IS THE PROPERTY OF MICRO SWITCH A DIVISION OF HONEYWELL. THIS DRAWING IS NOT TO BE COPIED OR USED WITHOUT THE APPROVAL OF MICRO SWITCH

MICRO SWITCH
a Honeywell Division
FED. MFG CODE 91929

AML PUSHBUTTONS & INDICATORS

CATALOG LISTING
AML 10 20 30 40
SERIES CHART 1

SCALE FULL
DO NOT SCALE PRINT
TOLERANCES
DESIGN UNITS
THIRD ANGLE PROJECTION
WEIGHT

CATALOG LISTING AML 10 20 30 40 SERIES CHART 1
PAGE 1 OF 1
RELEASE NO CO-78498
REPLACES AML 10, 20, 30 & 40 SERIES
ISSUE 6

REVISIONS			
A	C095297	GJW 8 JUL 99	
B	201477	GJW 9 OCT 00	
C	201566	CSL 20 OCT 00	
D	201696	GLT 14 NOV 00	
E	202971	CSL 30 APR 01	

DRAWN	JAK	17 JUN 94	
CHECK	JAF	11 JUL 94	
CHECK			
CHECK			
CHECK			

RASTER

Downloaded from Elcodis.com electronic components distributor