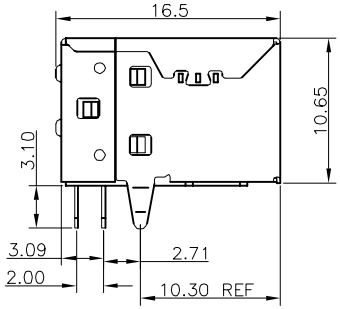

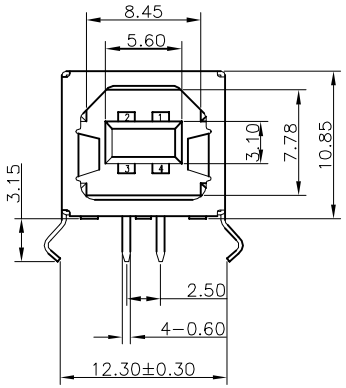

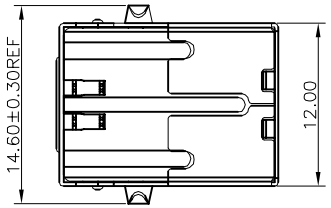

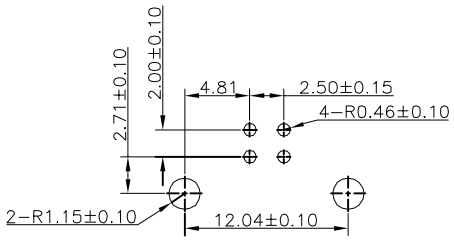

RECOMMENDED P.C.B LAYOUT

NOTES:

1.Material:
- 1.1 Housing: PBT+30%GF UL94V-0, Color White
- 1.2 Shell: Brass
- 1.3 Contact :Phosphor Bronze

2. FINISH:
- 2.1 Contact Area: Selective 30u"Au
  - Solder Area:Tin Plated
  - Under: Ni Plated

3.MECHANICAL:
- 3.1 Mating Force:3.57kgf Max.
- 3.2 Unmating Force:1.02kgf Min
- 3.3 Durability:1500 cycles Min

4.ELECTRICAL:
- 4.1 Current Rating:1.5A
- 4.2 Dielectric Strength:500V AC FOR 1 MINUTE
- 4.3 Contact Resistance:30mΩ Max
- 4.4 Insulation Resistance:1000 MΩ Min

5.Operating temperature: -55°C TO +85°C

① 6.PACKIING: Tray

RoHS compliant

Scale	Free
TOLERANCE	
.X	±0.30
.XX	±0.20
.XXX	±0.10
DIM	TOL
X.°	±5°
Angle	TOL
UNIT	mm

Id.	Modification	Date	Name
①	Update the part number AU-Y1007-2-R into AU-Y1007-2	14.07.2014	Winnie
⓪	Drawn	07.06.2013	Winnie

	Date	Name
Drawn	07.06.2013	Winnie
Approved	14.07.2014	Winnie

ASSMANN WSW components

Customer-No.

ASSMANN WSW-No.
AU-Y1007-2

Drawing-No.
ASS 5777 CO

rev01

Replace

SHEET