Power line chokes

Current-compensated D core double chokes
250 V AC, 3.3 … 68 mH, 0.7 … 4.6 A, +40 °C / +60 °C

Series/Type: **B82734R/W**

Date: December 2016

© EPCOS AG 2016. Reproduction, publication and dissemination of this publication, enclosures hereto and the information contained therein without EPCOS' prior express consent is prohibited.

EPCOS AG is a TDK Group Company.

Rated voltage 250 V AC
Rated inductance 3.3 ... 68 mH
Rated current 0.7 ... 4.6 A / +40 °C, +60 °C

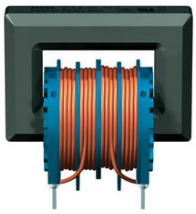

B82734R

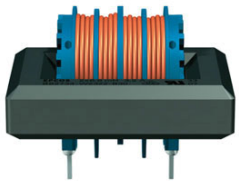

B82734W

Construction

- Current-compensated double choke
- Closed rectangular ferrite core
- Closed plastic coil former (UL 94 V-0)[1)]
- Without encapsulation
- 2-section winding
- Clearance and creepage distances ≥ 3 mm

Features

- High resonance frequency due to 2-section winding
- Approx. 0.55% stray inductance for symmetrical interference suppression
- Low leakage due to closed core shape
- High pulse strength
- Low whirring noise
- Suitable for wave soldering
- Design complies with EN 60938-2 (VDE 0565-2) and UL 1283
- UL[2)] and ENEC (VDE) approvals
- Recyclable owing to omission of encapsulation and glue
- RoHS-compatible

Applications

- Suppression of common-mode interferences
- Switch-mode power applications
- Electronic ballasts in lamps

Terminals

- Base material CuNi18Zn20
- Layer composition Ni, Sn
- Hot-dipped
- Pins 0.7 × 0.7 (mm)
- Lead spacing 15 × 12.5 (mm)

Marking

Manufacturer, rated inductance, rated current,
ordering code, approval symbols, date of manufacture (WWYY)

Delivery mode

Blister tray in cardboard box

1) Additionally certified values:

Glow wire flammability index (GWFI to IEC 60695-2-12):	+850 °C
Glow wire ignition temperature (GWIT to IEC 60695-2-13):	+775 °C
Glow wire test (GWT to IEC 60695-2-11):	+750 °C, 2 s / 850 °C, 30 s
Comparative tracking index (CTI to IEC 60112):	175 V
Ball pressure test (BP to IEC 60695-10-2):	+125 °C

2) UL approval with 300 V AC.

Dimensional drawings and pin configurations

Vertical version (B82734R)

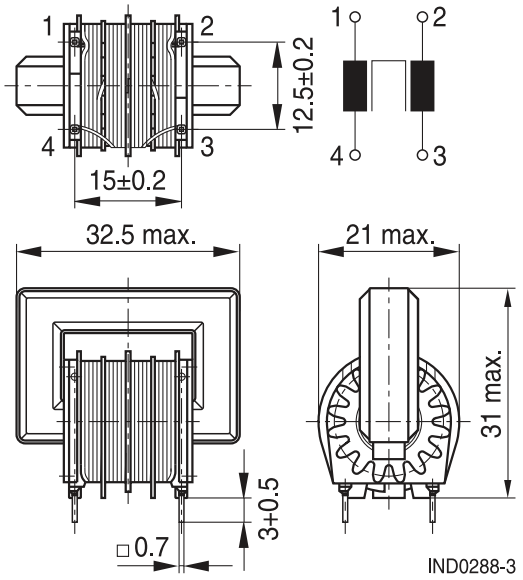

Horizontal version (B82734W)

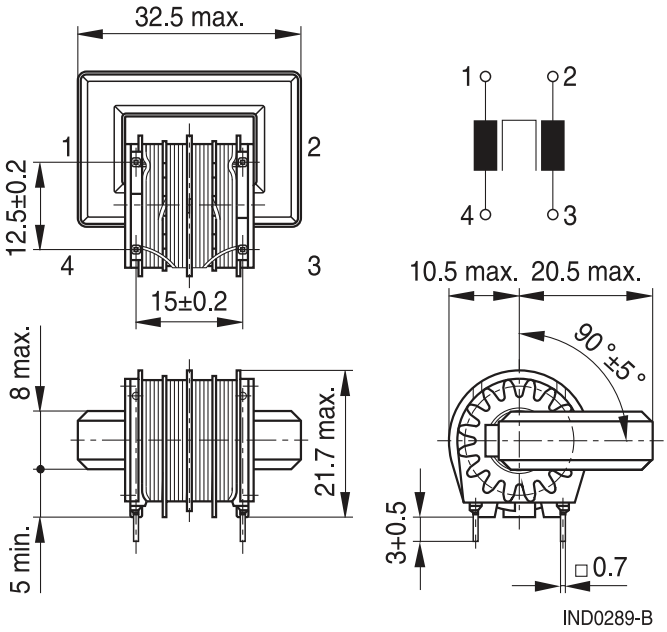

Part tolerances to ISO 2768-cL / ISO 8015.
Size ISO 14405 Ⓔ
All dimensions in mm

IND1276-L-E

Technical data and measuring conditions

Rated voltage V_R	250 V AC (50/60 Hz)
Test voltage V_{test}	1500 V AC, 2 s (line/line)
Rated temperature T_R	+40 °C / +60 °C
Rated current I_R	Referred to 50 Hz and rated temperature
Rated inductance L_R	Measured with Agilent 4284A at 10 kHz, 0.1 mA, +20 °C Inductance is specified per winding.
Inductance tolerance	–30%/+50% at +20°C
Inductance decrease $\Delta L/L_0$	< 10% at DC magnetic bias with I_R, +20 °C
Stray inductance $L_{stray,typ}$	Measured with Agilent 4284A at 10 kHz, 5 mA, +20 °C, typ. values
DC resistance R_{typ}	Measured at +20 °C, typical values, specified per winding
Solderability (lead-free)	Sn96.5Ag3.0Cu0.5: +(245 ±3) °C, (3 ±0.3) s Wetting of soldering area ≥ 95% (to IEC 60068-2-20, test Ta)
Resistance to soldering heat (wave soldering)	+(260 ±5) °C, (10 ±1) s (to IEC 60068-2-20, test Tb)
Climatic category	40/125/56 (to IEC 60068-1)
Storage conditions (packaged)	–25 °C … +40 °C, ≤ 75% RH
Weight	Approx. 30 g
Approvals	IEC / EN 60938-2, UL 1283 (E70122)

Characteristics and ordering codes

I_R	L_R	$L_{stray,typ}$	R_{typ}	T_R	Ordering code		Approvals	
A	mH	µH	mΩ	°C	Vertical version	Horizontal version		
0.7	68	410	1450	+60	B82734R2701B030	B82734W2701B030	×	×
1.3	47	250	560	+40	B82734R2132B030	B82734W2132B030	×	×
1.4	39	210	460	+40	B82734R2142B030	B82734W2142B030	×	×
1.7	27	140	320	+40	B82734R2172B030	B82734W2172B030	×	×
2.0	20	105	240	+40	B82734R2202B030	B82734W2202B030	×	×
2.3	15	80	185	+40	B82734R2232B030	B82734W2232B030	×	×
2.6	10	53	130	+40	B82734R2262B030	B82734W2262B030	×	×
3.2	6.8	35	85	+40	B82734R2322B030	B82734W2322B030	×	×
4.6	3.3	17	46	+40	B82734R2462B030	B82734W2462B030	×	×

× = approval granted

Impedance |Z| versus frequency f
measured with windings in parallel at +20 °C
typical values

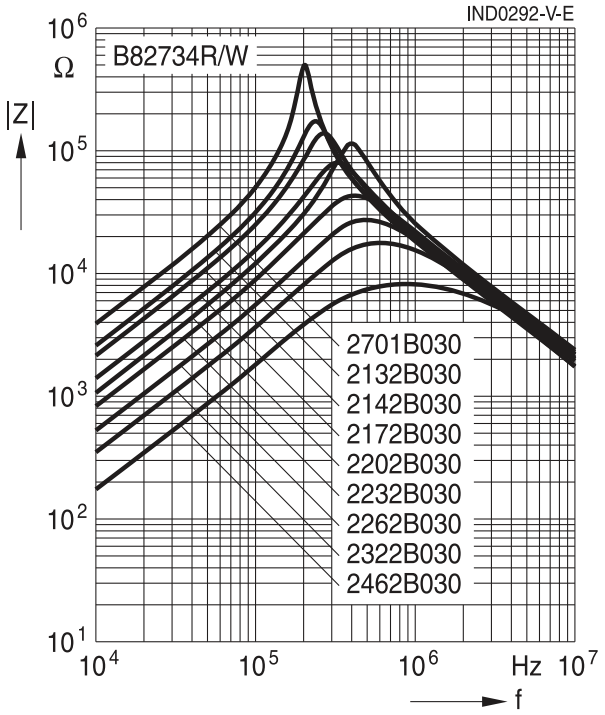

Current derating I_{op}/I_R
versus ambient temperature T_A

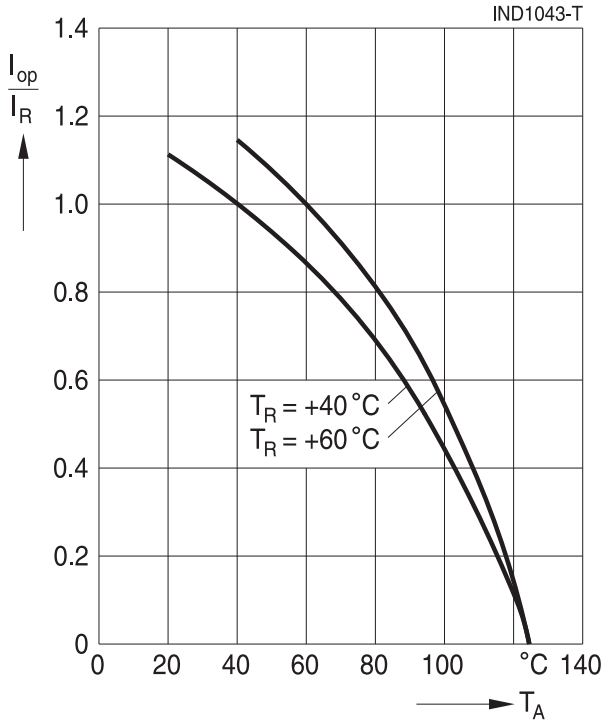

Cautions and warnings

- Please note the recommendations in our Inductors data book (latest edition) and in the data sheets.
  - Particular attention should be paid to the derating curves given there.
  - The soldering conditions should also be observed. Temperatures quoted in relation to wave soldering refer to the pin, not the housing.
- If the components are to be washed varnished it is necessary to check whether the washing varnish agent that is used has a negative effect on the wire insulation, any plastics that are used, or on glued joints. In particular, it is possible for washing varnish agent residues to have a negative effect in the long-term on wire insulation.
  Washing processes may damage the product due to the possible static or cyclic mechanical loads (e.g. ultrasonic cleaning). They may cause cracks to develop on the product and its parts, which might lead to reduced reliability or lifetime.
- The following points must be observed if the components are potted in customer applications:
  - Many potting materials shrink as they harden. They therefore exert a pressure on the plastic housing or core. This pressure can have a deleterious effect on electrical properties, and in extreme cases can damage the core or plastic housing mechanically.
  - It is necessary to check whether the potting material used attacks or destroys the wire insulation, plastics or glue.
  - The effect of the potting material can change the high-frequency behaviour of the components.
- Ferrites are sensitive to direct impact. This can cause the core material to flake, or lead to breakage of the core.
- Even for customer-specific products, conclusive validation of the component in the circuit can only be carried out by the customer.

Display of ordering codes for EPCOS products

The ordering code for one and the same product can be represented differently in data sheets, data books, other publications and the website of EPCOS, or in order-related documents such as shipping notes, order confirmations and product labels. **The varying representations of the ordering codes are due to different processes employed and do not affect the specifications of the respective products**. Detailed information can be found on the Internet under www.epcos.com/orderingcodes.

Important notes

The following applies to all products named in this publication:

1. Some parts of this publication contain **statements about the suitability of our products for certain areas of application**. These statements are based on our knowledge of typical requirements that are often placed on our products in the areas of application concerned. We nevertheless expressly point out **that such statements cannot be regarded as binding statements about the suitability of our products for a particular customer application.** As a rule, EPCOS is either unfamiliar with individual customer applications or less familiar with them than the customers themselves. For these reasons, it is always ultimately incumbent on the customer to check and decide whether an EPCOS product with the properties described in the product specification is suitable for use in a particular customer application.

2. We also point out that **in individual cases, a malfunction of electronic components or failure before the end of their usual service life cannot be completely ruled out in the current state of the art, even if they are operated as specified.** In customer applications requiring a very high level of operational safety and especially in customer applications in which the malfunction or failure of an electronic component could endanger human life or health (e.g. in accident prevention or life-saving systems), it must therefore be ensured by means of suitable design of the customer application or other action taken by the customer (e.g. installation of protective circuitry or redundancy) that no injury or damage is sustained by third parties in the event of malfunction or failure of an electronic component.

3. **The warnings, cautions and product-specific notes must be observed**.

4. In order to satisfy certain technical requirements, **some of the products described in this publication may contain substances subject to restrictions in certain jurisdictions (e.g. because they are classed as hazardous)**. Useful information on this will be found in our Material Data Sheets on the Internet (www.epcos.com/material). Should you have any more detailed questions, please contact our sales offices.

5. We constantly strive to improve our products. Consequently, **the products described in this publication may change from time to time**. The same is true of the corresponding product specifications. Please check therefore to what extent product descriptions and specifications contained in this publication are still applicable before or when you place an order.

   We also **reserve the right to discontinue production and delivery of products**. Consequently, we cannot guarantee that all products named in this publication will always be available. The aforementioned does not apply in the case of individual agreements deviating from the foregoing for customer-specific products.

6. Unless otherwise agreed in individual contracts, **all orders are subject to the current version of the "General Terms of Delivery for Products and Services in the Electrical Industry" published by the German Electrical and Electronics Industry Association (ZVEI)**.

7. The trade names EPCOS, CeraDiode, CeraLink, CeraPad, CeraPlas, CSMP, CSSP, CTVS, DeltaCap, DigiSiMic, DSSP, ExoCore, FilterCap, FormFit, LeaXield, MiniBlue, MiniCell, MKD, MKK, MotorCap, PCC, PhaseCap, PhaseCube, PhaseMod, PhiCap, PQSine, SIFERRIT, SIFI, SIKOREL, SilverCap, SIMDAD, SiMic, SIMID, SineFormer, SIOV, SIP5D, SIP5K, TFAP, ThermoFuse, WindCap are **trademarks registered or pending** in Europe and in other countries. Further information will be found on the Internet at www.epcos.com/trademarks.

Mouser Electronics

Authorized Distributor

Click to View Pricing, Inventory, Delivery & Lifecycle Information:

EPCOS / TDK:

B82734R2172B30 B82734R2262B30 B82734R2462B30 B82734R2132B30 B82734R2142B30 B82734R2232B30 B82734R2322B30 B82734R2202B030 B82734R2252B030 B82734R2701B030 B82734W2132B030 B82734W2142B030 B82734W2172B030 B82734W2232B030 B82734W2262B030 B82734W2322B030 B82734W2462B030 B82734W2192B030 B82734W2701B30 B82734W2202B30