Inductive sensor

BES 516-345-MO-C-03
BES01F7

BALLUFF
sensors worldwide

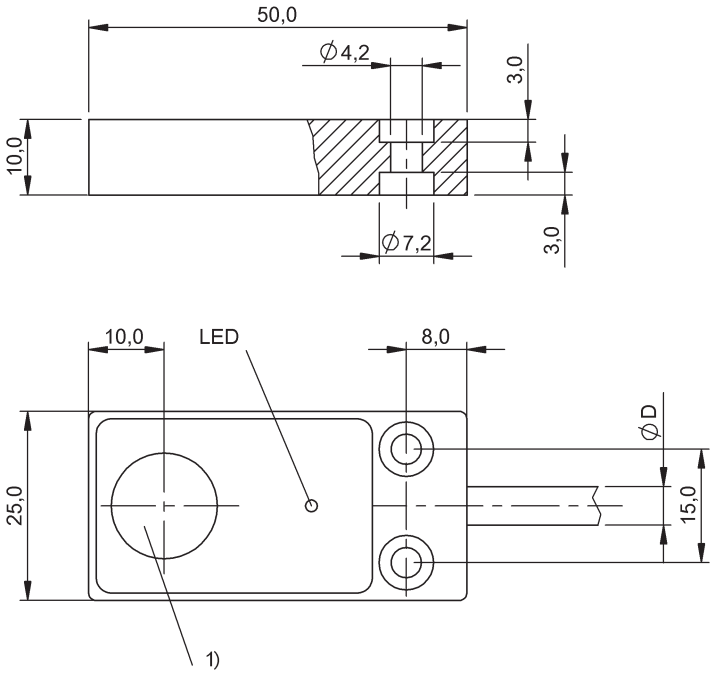

1) Active surface

- **NPN**
- **Normally open (NO)**
- **5.00 mm**
- **Flush (shielded)**
- **Cable, PVC, 3.00 m**

General attributes

Approvals / Conformity	CE
Basic standard	IEC 60947-5-2
Enclosure Type per IEC 60529	IP67
Function indicator	Yes
Polarity reversal protected	Yes
Power indicator	No
Short circuit protected	Yes

Electrical attributes

Connection type	Cable
Eff. operating current Ie	200 mA
Eff. operating voltage Ue DC	24.0 V
Electrical version	DC, direct current
Load capacitance max. (at Ue)	1.000 µF
Max. no-load cur. Io undamped	12.0 mA
Minimum operating current Im	0 mA
No-load current Io damped max.	25.0 mA
Operating voltage UB max. DC [V]	30.0 V
Operating voltage UB min. DC [V]	10.0 V
Rated insulation voltage Ui	75 VDC
Rated short circuit current	100 A
Ripple max. (% of Ue)	15 %
Switching freq. f max. (at Ue)	500 Hz
Switching function	Normally open (NO)
Switching output	NPN
Voltage drop static max.	2.5 V

Mechanical attributes

Ambient temperature Ta max.	70 °C
Ambient temperature Ta min.	-25 °C
Assured operating distance Sa	4.00 mm
Cable diameter D max.	4.6 mm
Cable jacket material	PVC
Cable length	3.00 m
Conductor cross-section	0.34 mm²
Depth	10.0 mm
Eff. operating distance Sr	5.00 mm
Height (small side)	25.0 mm
Housing material	GD-Al12
Mech. installation condition	Flush (shielded)
Number of conductors	3
Rated operating distance Sn [mm]	5.00 mm
Sensing face material	PBT
Width (long side)	50.0 mm

Additional text
The sensor is functional again after the overload has been eliminated.

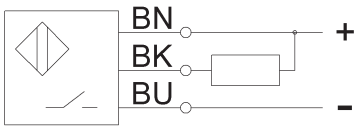
BN
BK
BU
+
-