The product information in this catalog is for reference only. Please request the Engineering Drawing for the most current and accurate design information.

BNC SERIES RF CO-AXIAL CONNECTORS

Overview

The BNC series are most widely used as 50Ω coaxial connectors, and compact size, light weight, and quick mounting and dismounting (bayonet lock coupling). Suitable for coaxial cables (RG-55. 58/U) with a finished outside diameter of ϕ3-ϕ8.

Applicable standards

Defense Agency (NDS XC 6103, DSP C 6202)
Japanese Industrial Standards (JIS C 5412)
NTT (Model 2095 3C connector)
*Meets MIL Specifications. (See Products Meeting MIL Specifications Index Table, pages 220-221.)

Electrical Specifications

Item	Standard
Characteristic impedance	50Ω(*1)
Withstand voltage	1,500Vr.m.s. for 1min.
Insulation resistance	5,000MΩ or more at 500VDC
Contact resistance	3mΩ or less at 1ADC
Applicable frequency range	DC-4GHz
Voltage standing wave	1.2 or less(DC-2GHz)

(*1) Not different in electrical specifications from the 50Ω cable when connected to the 75Ω coaxial cable (3C-2V) for use at low fraquencies (DC-200MHz).

Main Materials/Finish

Part	Material	Finish(*2)
Armor(shell)	Brass	Silver plated, Nickel-plated
Male terminal	Brass	Silver plated, Gold-plated
Female terminal	Beryllium copper	Silver plated, Gold-plated
Insulation	Tetraflouride resin	—
Gasket	Silicon rubber	—

(*2) Surface treatment differs according to the product number unit. For details, see the BNC Connector List.

Feb.1.2017 Copyright 2017 HIROSE ELECTRIC CO., LTD. All Rights Reserved.

The product information in this catalog is for reference only. Please request the Engineering Drawing for the most current and accurate design information.

BNC SERIES RF CO-AXIAL CONNECTORS

Plug

Applicable cable	Part No.	HRS No.	Dimension			Shape
			φD	φd	L	
RG-55/U, 58/U	UG-88/U(40)	302-0001-0-40	5.4	11.1	26.5	Fig.1
	UG-88D/U(40)	302-0070-3-40	5.6	12.7	28.8	Fig.1
	3CA-P2(40)	302-0203-5-40	5.6	13.7	29.5	Fig.1
RG-59/U, 62/U	UG-260/U(40)	302-0002-3-40	6.6	11.1	26.0	Fig.1
RG-188A/U	BNC-P-188A/U(40)	302-0216-7-40	3.0	8.0	25.0	Fig.4
RG-196A/U	BNC-P-196/U(40)	302-0214-1-40	2.3	5.0	27.3	Fig.6
5D-2W	BNC-P-5DW-1(40)	302-0189-6-40	8.5	14.0	35.0	Fig.3
5D-2W, 5C-2W	BNC-P-5DW-SA(40)	302-0217-0-40	8.7	15.0	33.7	Fig.2
5D-2V	BNC-P-5DV(40)	302-0132-9-40	7.8	15.0	31.0	Fig.1
5D-2V, 5C-2V	BNC-P-5DV-SA(40)	302-0218-2-40	8.0	15.0	33.7	Fig.2
3C-2Z	3CZ-P(40)	302-0215-4-40	6.5	13.7	29.5	Fig.1
3C-2T	3CT-P(40)	302-0210-0-40	8.0	14.2	29.7	Fig.1
	3CT-P-1(40)	302-0208-9-40	8.4	14.0	30.0	Fig.3
	3CT-P3(40)	302-0270-2-40	8.4	14.0	30.0	Fig.3
3C-2W	3DW-P(40)	302-0209-1-40	7.1	14.2	29.7	Fig.1
3D-2V, 3C-2V	BNC-P-3DV-SA(40)	302-0219-5-40	6.3	15.0	33.7	Fig.2
3C-2V	3CV-P2(40)	302-0202-2-40	6.3	13.7	29.5	Fig.1
	BNC-P-3(40)	302-0030-9-40	6.4	11.1	26.5	Fig.1
	3CV-P3(40)	302-0269-3-40	6.8	14.0	30.0	Fig.3
1.5D-2W, 1.5C-2W	BNC-P-1.5WCR(40)	302-0295-3-40	1.8	10.0	28.1	Fig.5
1.5D-2W	BNC-P-1.5W(40)	302-0299-4-40	3.9	8.0	25.0	Fig.4
1.5D-2V, 1.5C-2V	BNC-P-1.5CR(40)	302-0294-0-40	1.8	10.0	28.1	Fig.5
1.5D-2V	BNC-P-1.5(40)	302-0257-4-40	3.5	8.0	25.0	Fig.4

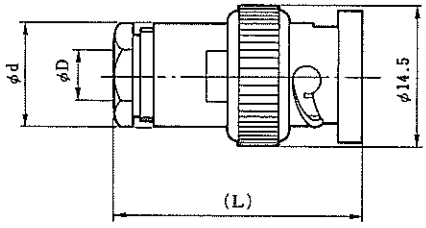

Fig.1

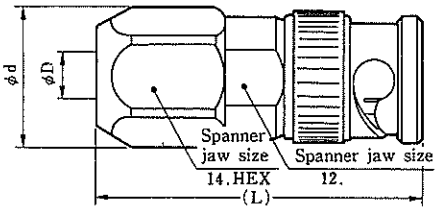

Fig.2

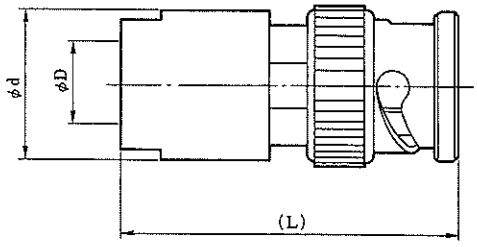

Fig.3

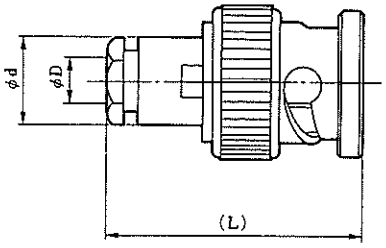

Fig.4

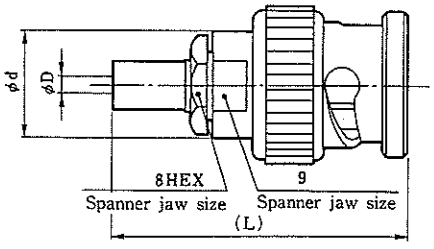

Fig.5

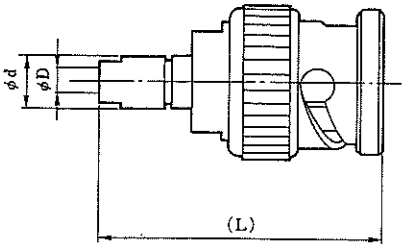

Fig.6

Feb.1.2017 Copyright 2017 HIROSE ELECTRIC CO., LTD. All Rights Reserved.

The product information in this catalog is for reference only. Please request the Engineering Drawing for the most current and accurate design information.

Feb.1.2017 Copyright 2017 HIROSE ELECTRIC CO., LTD. All Rights Reserved.

L-shaped Plug

Applicable cable	Part No.	HRS No.	Dimension				Shape
			φD	φd	W1	W2	
BG-55/U, 58/U	UG-913/U(42)	302-0043-0-42	5.4	12.7	11.1	11.1	Fig.7
RG-59/U, 62/U	BNC-LP-59/U(40)	302-0075-7-40	6.6	12.7	11.1	11.1	Fig.7
3C-2W	3CW-PL(40)	302-0158-2-40	7.1	14.2	13.0	13.0	Fig.8
3C-2V	3CV-PL(40)	302-0157-0-40	6.3	13.7	12.0	12.0	Fig.8

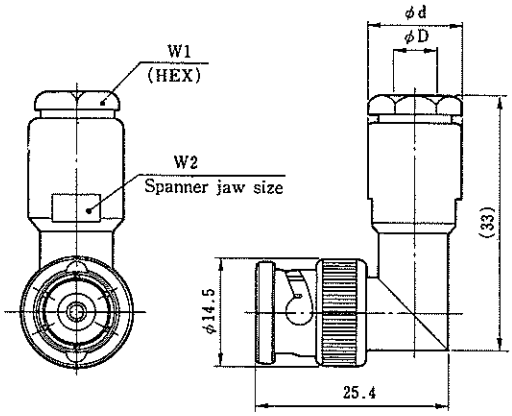

Fig.7

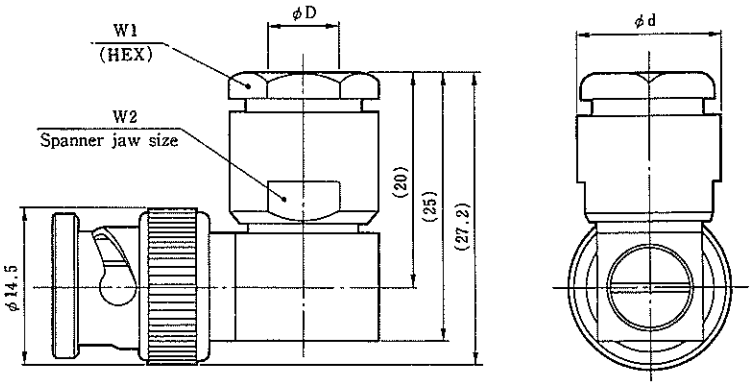

Fig.8

Jack

Applicable cable	Part No.	HRS No.	Dimension					Shape
			φD	φd	W1	W2	L	
RG-55/U, 58/U	UG-89/U(40)	302-0034-0-40	5.4	11.1	9.5	12.7	28.7	Fig.9
RG-59/U, 62/U	UG-261/U(40)	302-0035-2-40	6.6	11.1	9.5	12.7	30.0	Fig.9
3C-2V	3CV-J(40)	302-0006-4-40	6.3	11.1	9.5	11.5	28.7	Fig.9
1.5D-2W,1.5C-2W	BNC-J-1.5WCR(40)	302-0297-9-40	1.8	—	8.0	13.0	31.0	Fig.10
1.5D-2V,1.5C-2V	BNC-J-1.5CR(40)	302-0296-6-40	1.8	—	8.0	13.0	31.0	Fig.10

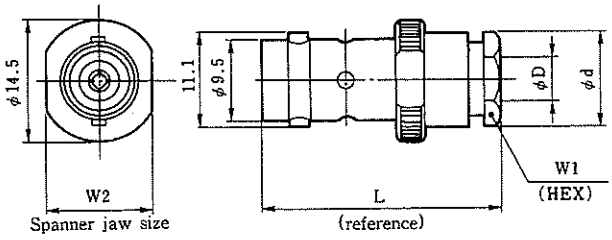

Fig.9

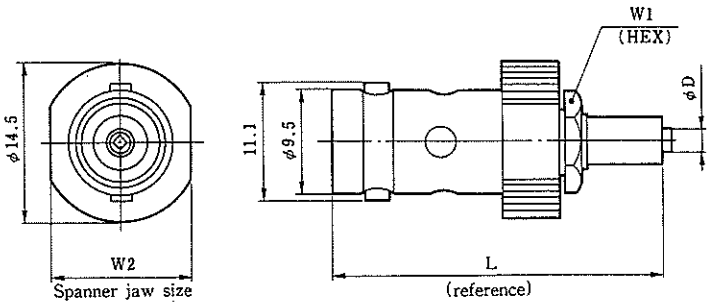

Fig.10

The product information in this catalog is for reference only. Please request the Engineering Drawing for the most current and accurate design information.

BNC SERIES RF CO-AXIAL CONNECTORS

Panel Jack

Applicable cable	Part No.	HRS No.	Dimension								Shape	Mounting hole dimensions
			φD	φd	L	ℓ	□P	□S	G	W		
RG-55/U, 58/U	UG-291/U(40)	302-0036-5-40	5.4	11.1	28.2	18.1	12.7	17.5	M2.6 ×0.45	9.5	Fig.11	1-1
	3CA-PJ2(40)	302-0205-0-40	5.4	11.1	28.7	18.1	12.7	17.5	φ3	9.5	Fig.11	1-2
RG-59/U, 62/U	UG262/U(40)	302-0007-7-40	6.6	11.1	28.4	18.1	12.7	17.5	M2.6 ×0.45	9.5	Fig.11	1-1
RG-188A/U	BNC-PJ-188/U(40)	302-0230-8-40	3.0	9.0	26.8	18.1	12.7	17.5	M2.6 ×0.45	7.0	Fig.11	1-3
RG-196A/U	BNC-PJ-196/U(40)	302-0194-6-40	2.3	5.0	28.0	18.1	12.7	17.5	M2.6 ×0.45	4.0	Fig.11	1-4
3C-2W	3CW-PJ(40)	302-0139-8-40	7.2	14.0	31.4	18.1	12.7	17.5	φ3	13.0	Fig.11	1-6
3C-2V	3CW-PJ2(40)	302-0204-8-40	6.3	11.1	28.7	18.1	12.7	17.5	φ3	9.5	Fig.11	1-2
2.5D-2V	BNC-PJ-1.5DV(40)	302-0238-0-40	4.7	11.1	28.7	18.1	12.7	17.5	φ3	9.5	Fig.11	1-2
1.5D-2W	BNC-PJ-1.5(40)	302-0228-6-40	4.5	9.5	26.8	18.1	12.7	17.5	M2.6 ×0.45	7.0	Fig.11	1-7
	BNC-PJ-1.5W-1(40)	302-0260-9-40	4.5	9.5	26.8	20.1	12.7	17.5	φ2.9	7.0	Fig.11	1-8
	BNC-PJ-1.5W-2(40)	302-0282-1-40	4.5	9.5	26.8	20.1	12.7	17.5	M2.6×0.45 φ3	7.0	Fig.11	1-9
1.5D-2V	BNC-PJ-1.5DV-1(40)	302-0285-0-40	3.4	9.5	26.8	18.1	12.7	17.5	φ3	7.0	Fig.11	1-8

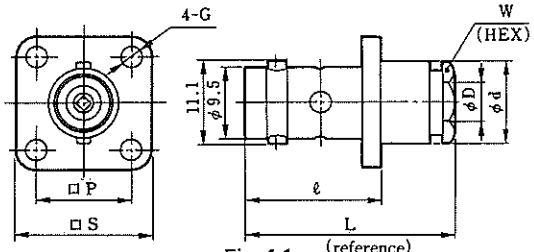

Fig.11

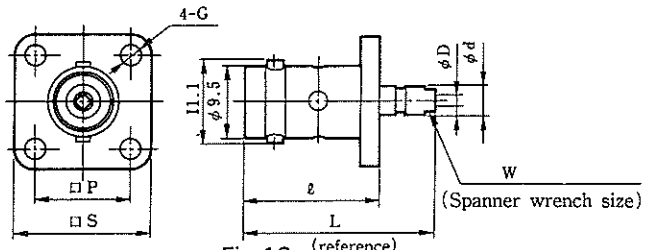

Fig.12

Applicable cable	Part No.	HRS No.	Dimension						Shape	Mounting hole dimensions
			φD	φd	L	ℓ	W1	W2		
RG-55/U, 58/U	BNC-PJ-58(40)	302-0108-4-40	5.4	1/2-28NEF-2A	28.5	16.9	9.5	17.0	Fig.13	4-1
1.5D-2W	BNC-BPJ-1.5W(40)	302-0284-7-40	4.5	3/8-32NEF-2A	26.8	12.8	7.0	11.0	Fig.15	3-3
	BNC-BPJ-1.5W-1(40)	302-0289-0-40	4.5	3/8-32NEF-2A	26.8	15.2	7.0	12.7	Fig.14	2-1
1.5D-2V	BNC-BPJ-1.5-1(40)	302-0252-0-40	3.5	3/8-32NEF-2A	26.8	15.2	7.0	12.7	Fig.14	2-1

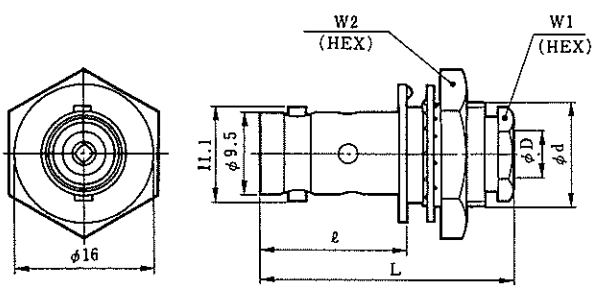

Fig.13

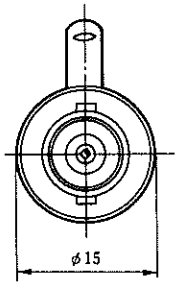

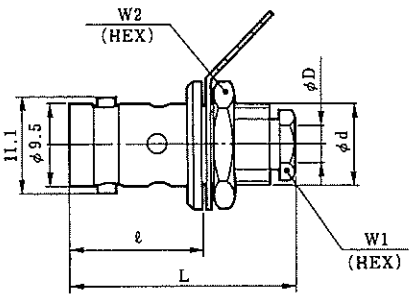

Fig.14

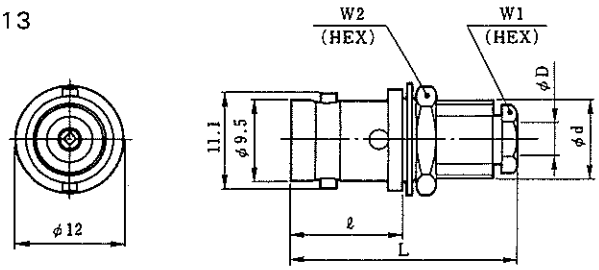

Fig.15

Feb.1.2017 Copyright 2017 HIROSE ELECTRIC CO., LTD. All Rights Reserved.

The product information in this catalog is for reference only. Please request the Engineering Drawing for the most current and accurate design information.

L-shaped Jack

Applicable cable	Part No.	HRS No.	Dimension							Mounting hole dimensions
			φD	φd	L	ℓ1	ℓ2	W1	W2	
1.5D-2V	BNC-LPJ-1.5(40)	302-0255-9-40	3.5	3/8-32NEF-2A	33.3	21.7	14.0	7.0	12.7	2-1

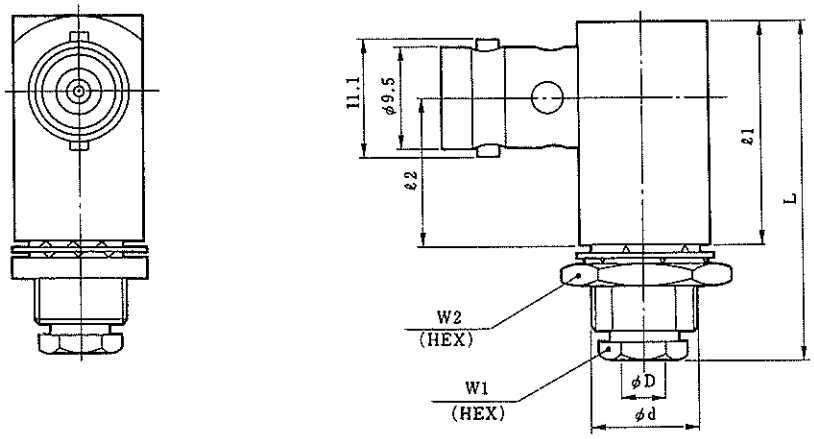

Fig.16

Feb.1.2017 Copyright 2017 HIROSE ELECTRIC CO., LTD. All Rights Reserved.

The product information in this catalog is for reference only. Please request the Engineering Drawing for the most current and accurate design information.

BNC SERIES RF CO-AXIAL CONNECTORS

Receptacles

Part No.	HRS No.	d	Mounting hole dimensions
UG-290/U(40)	302-0009-2-40	M2.6X0.45	1-10
3C-R(40)	302-0031-1-40	φ3	1-11

Part No.	HRS No.	L	ℓ1	ℓ2	Remarks	Mountinghole dimensions
BNC-R-12(40)	302-0229-9-40	19.6	0	1.5	Tab terminal	1-12
BNC-R-13(40)	302-0239-2-40	21.6	2.0	1.5	Tab terminal	1-12

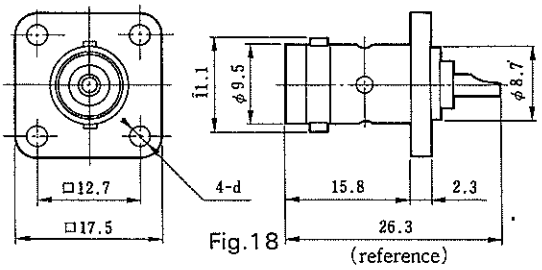

Fig.18

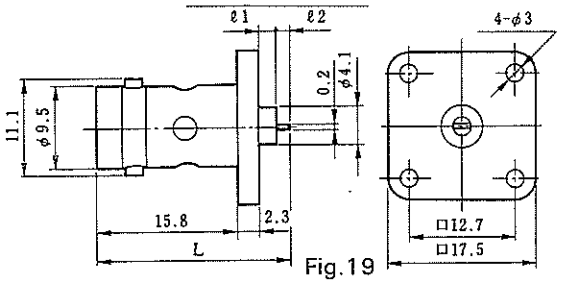

Fig.19

Part No.	HRS No.	Remarks	Mountinghole dimensions
BNC-R-14(40)	302-0245-5-40	Round half cut terminal	1-12

Part No.	HRS No.	Remarks	Mountinghole dimensions
BNC-LR(40)	302-0020-5-40		1-11

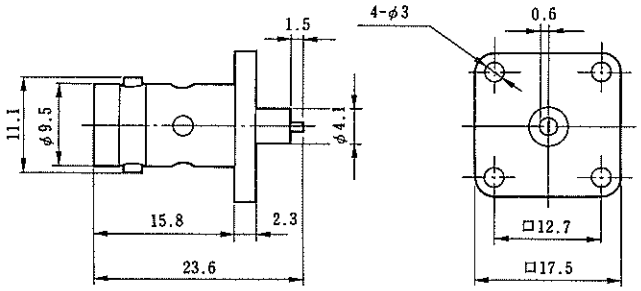

Fig.20

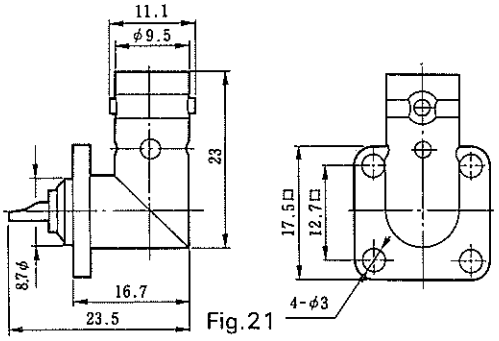

Fig.21

Part No.	HRS No.	φD	L	ℓ	W	Panel mount type	Shape	Mountinghole dimensions
UG-604/U(40)	302-0016-8-40	14.5	26.3	13.7	12.7	2.8	Fig.25	3-1
UG-625/U(40)	302-0017-0-40	12.7	26.3	12.7	12.7	4	Fig.25	2-3
UG-625/U-4(40)	302-0221-7-40	12.7	26.3	12.7	12.7	4	Fig.23	2-3
UG-625/U-10(40)	302-0253-3-40	12.7	21.9	12.7	—	1.3	Fig.24	3-2
UG-625/U-11A(40)	302-0274-3-40	12.7	24.2	12.7	12.7	4	Fig.25	2-4
UG-657/U(40)	302-0012-7-40	14.5	32.6	15.2	12.7	5.6	Fig.25	3-3
UG-657/U-E(40)	302-0080-7-40	14.5	32.6	15.2	12.7	5.6	Fig.23	3-3
UG-1094/U(40)	302-0178-0-40	12.7	27.0	11.9	12.7	4	Fig.25	2-4

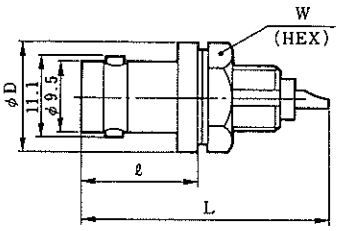

Fig.22

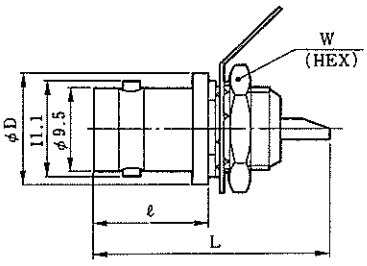

Fig.23

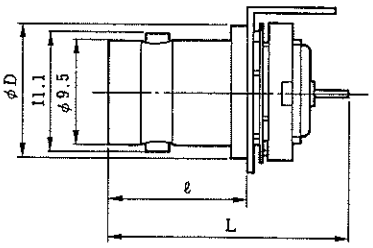

Fig.24

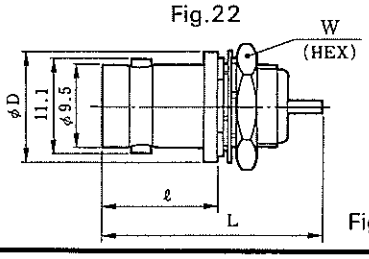

Fig.25

Feb.1.2017 Copyright 2017 HIROSE ELECTRIC CO., LTD. All Rights Reserved.

The product information in this catalog is for reference only. Please request the Engineering Drawing for the most current and accurate design information.

Part No.	HRS No.	Shape	Mounting hole dimensions
BNC-FBR(41)	302-0268-0-41	Fig.27	2.3
BNC-FBR-W(40)	302-0279-7-40	Fig.29	—

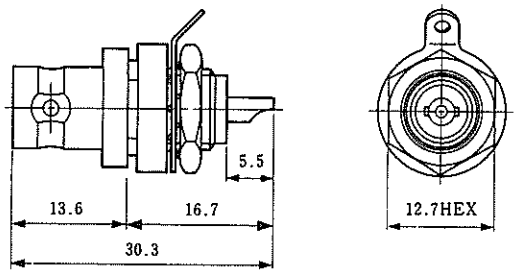

Outside-insulating connector Fig.27

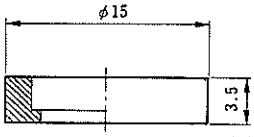

Fig.29

Washer mounted on BNC-FBR(01), shown in Fig.28, to connect the panel to the connector external conductor.

Plug receptacles

Part No.	HRS No.	Mounting hole dimensions
BNC-BPR-3(40)	302-0249-6-40	2-1

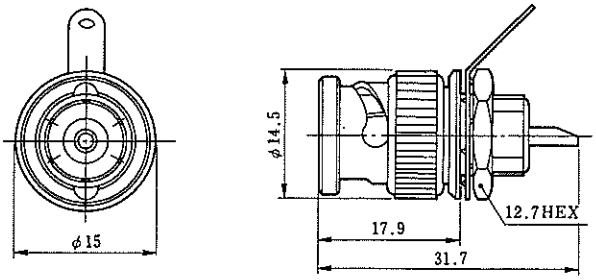

Fig.30

Feb.1.2017 Copyright 2017 HIROSE ELECTRIC CO., LTD. All Rights Reserved.

The product information in this catalog is for reference only. Please request the Engineering Drawing for the most current and accurate design information.

BNC SERIES RF CO-AXIAL CONNECTORS

Printed-circuit-board mounting type

Part No.	HRS No.	Shape	L	ℓ1	ℓ2	Mounting hole dimensions
BNC-R-PC(40)	302-0241-4-40	Fig.31	23.1	18.1	5.0	6-1
BNC-R-PC-2(40)	302-0243-0-40	Fig.32	20.4	17.1	3.3	7-2
BNC-R-PC-7(40)	302-0280-6-40	Fig.31	23.1	20.64	2.46	6-1

Part No.	HRS No.	Shape	Mounting hole dimensions
BNC-LR-PC(40)	302-0242-7-40	Fig.33	6-1
BNC-LR-PC-1(40)	302-0262-4-40	Fig.34	7-1
BNC-LR-PC-3(40)	302-0276-9-40	Fig.35	6-1

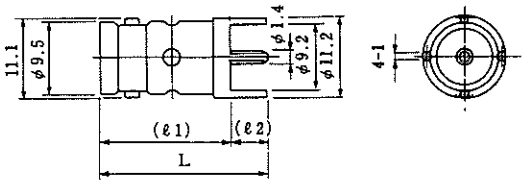

Fig.31

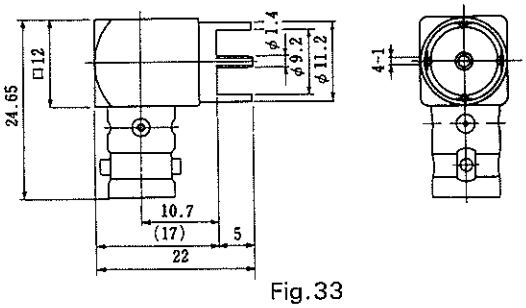

Fig.33

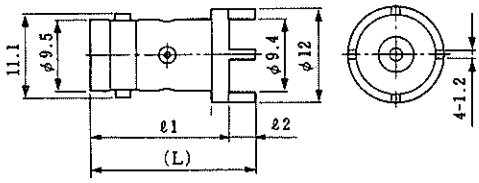

Fig.32

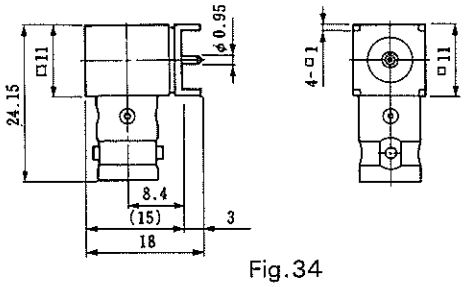

Fig.34

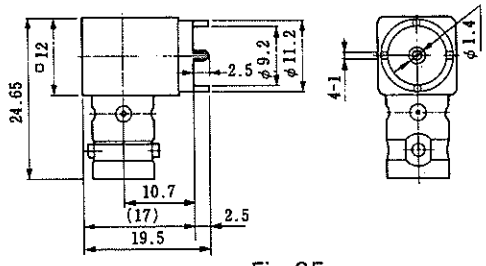

Fig.35

Lug terminal

Part No.	HRS No.	Remrks
BNC-EL	302-0079-8	Earth Lug

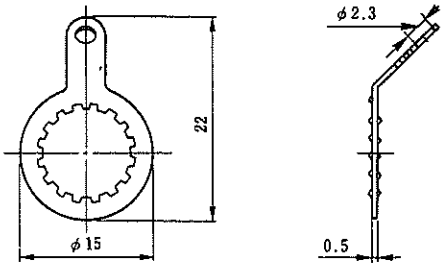

Fig.36

Feb.1.2017 Copyright 2017 HIROSE ELECTRIC CO., LTD. All Rights Reserved.

The product information in this catalog is for reference only. Please request the Engineering Drawing for the most current and accurate design information.

Adapters

Part No.	HRS No.	Shape
BNC-A-JJ(40)	302-0039-3-40	Fig.37
BNC-A-JJ-1(40)	302-0050-6-40	Fig.38

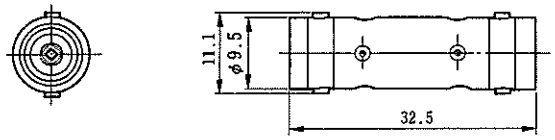

Fig.37

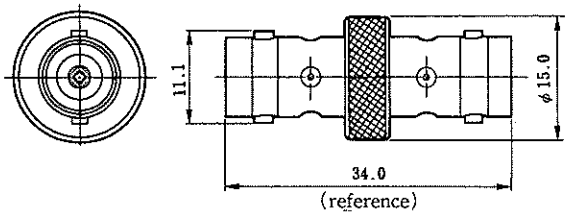

Fig.38

Part No.	HRS No.	L	ℓ	d	Shape
BNC-PA-JJ(40)	302-0052-1-40	34	15.85	φ3	Fig.39
UG-414/U(40)	302-0040-2-40	32.54	17.6	M2.6X0.45	Fig.39

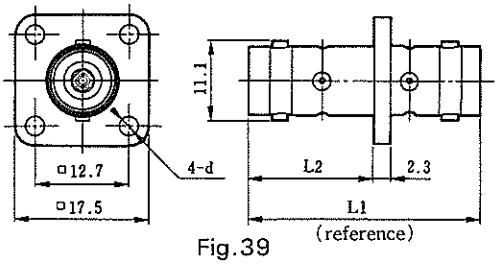

Fig.39

Part No.	HRS No.	Remarks
UG-491/U(40)	302-0022-0-40	A-PP

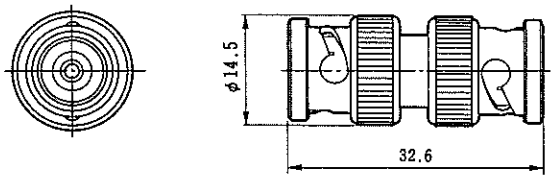

Fig.40

Part No.	HRS No.	Remarks
UG-306/U(40)	302-0023-3-40	LA-PJ

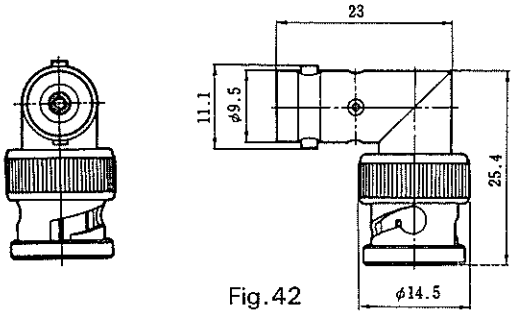

Fig.42

Part No.	HRS No.	Remarks
BNC-TA-JJJ(40)	302-0024-6-40	

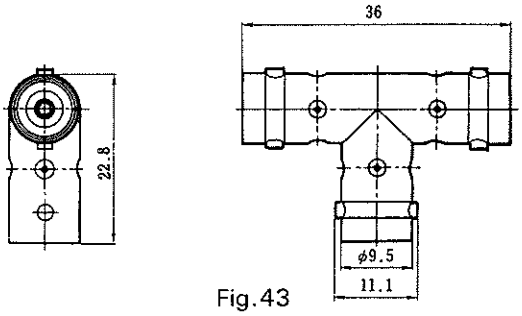

Fig.43

Part No.	HRS No.	Remarks
UG-274/U(40)	302-0025-9-40	TA-JPJ

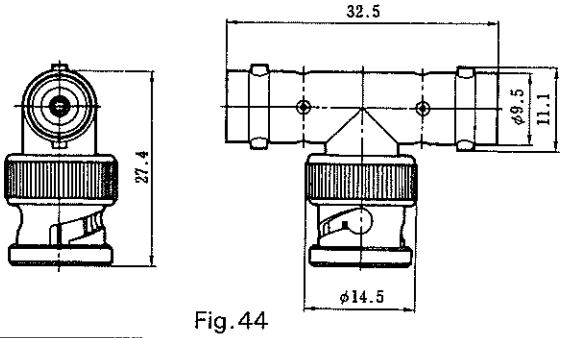

Fig.44

Part No.	HRS No.	L	Remarks
BNC-UPA(40)	302-0167-3-40	35	U Link

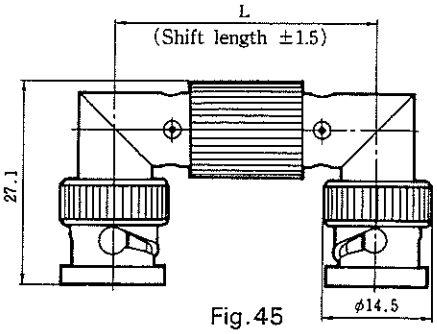

Fig.45

Feb.1.2017 Copyright 2017 HIROSE ELECTRIC CO., LTD. All Rights Reserved.

The product information in this catalog is for reference only. Please request the Engineering Drawing for the most current and accurate design information.

Cap

Part No.	HRS No.	Remarks
CW-123A/U(40)	302-0041-5-40	—

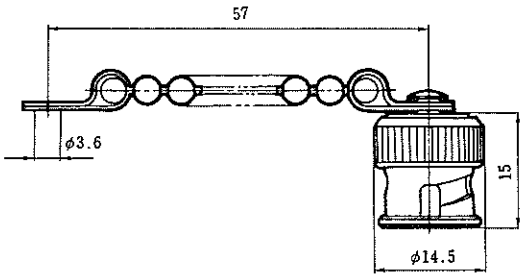

Fig.46

Short plug

Part No.	HRS No.	Remarks
JCW-159/U(40)	302-0026-1-40	Short Plug

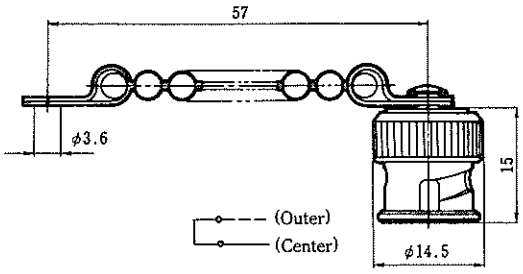

Fig.47

Feb.1.2017 Copyright 2017 HIROSE ELECTRIC CO., LTD. All Rights Reserved.

The product information in this catalog is for reference only. Please request the Engineering Drawing for the most current and accurate design information.

Model BNC Connector List

Type	Part No.	HRS No.	Applicable cable	Surface treatment				Remarks
				Armor		Center contact		
				Silver	Nickel	Silver	Gold	
Straight plug	UG-88/U(40)	302-0001-0-40	RG-55/U, 58/U	○		○		
	UG-88D/U(40)	302-0070-3-40		○		○		
	3CA-P2(40)	302-0203-5-40		○		○		
	UG-260/U(40)	302-0002-3-40	RG-59/U, 62/U	○		○		
	BNC-P-188A/U(40)	302-0216-7-40	RG-188A/U	○		○		
	BNC-P-196/U(40)	302-0214-1-40	RG-196A/U	○			○	
	BNC-P-5DV-SA(40)	302-0218-2-40	5D-2V, 5C-2V	○		○		
	BNC-P-5DW-1(40)	302-0189-6-40	5D-2W	○		○		
	BNC-P-5DW-SA(40)	302-0217-0-40	5D-2W, 5C-2W	○		○		
	BNC-P-3(40)	302-0030-9-40	3C-2V	○		○		
	BNC-P-3DV-SA(40)	302-0219-5-40	3D-2V, 3C-2V	○		○		
	3CV-P2(40)	302-0202-2-40	3C-2V	○		○		
	3CV-P3(40)	302-0269-3-40		○		○		
	BNC-P-1.5WCR(40)	302-0295-3-40	1.5D-2W, 1.5C-2W		○	○		
	BNC-P-1.5(40)	302-0257-4-40	1.5D-2V		○	○		
	BNC-P-1.5W(40)	302-0299-4-40	1.5D-2W		○	○		
	BNC-P-1.5CR(40)	302-0294-0-40	1.5D-2V, 1.5C-2V		○	○		
	3CZ-P(40)	302-0215-4-40	3C-2Z	○		○		
	3CT-P(40)	302-0210-0-40	3C-2T	○		○		
	3CT-P-1(40)	302-0208-9-40		○		○		
	3CT-P3(40)	302-0270-2-40		○		○		
	3CW-P(40)	302-0209-1-40	3C-2W	○		○		

Feb.1.2017 Copyright 2017 HIROSE ELECTRIC CO., LTD. All Rights Reserved.

The product information in this catalog is for reference only. Please request the Engineering Drawing for the most current and accurate design information.

BNC SERIES RF CO-AXIAL CONNECTORS

Type	Part No.	HRS No.	Applicable cable	Surface treatment				Remarks
				Armor		Center contact		
				Silver	Nickel	Silver	Gold	
L-shaped plug	UG-913/U(42)	302-0043-0-42	RG-55/U, 58/U	○		○		
	BNC-LP-59/U(40)	302-0075-7-40	RG-59/U, 62/U	○		○		
	3CV-PL(40)	302-0157-0-40	3C-2V	○		○		
	3CW-PL(40)	302-0158-2-40	3C-2W	○		○		
Jack	UG-89/U(40)	302-0034-0-40	RG-55/U, 58/U	○		○		
	UG-261/U(40)	302-0035-2-40	RG59/U, 62/U	○		○		
	3CV-J(40)	302-0006-4-40	3C-2V	○		○		
	BNC-J-1.5WCR(40)	302-0297-9-40	1.5D-2W, 1.5C-2W		○	○		
	BNC-J-1.5CR(40)	302-0296-6-40	1.5D-2V, 1.5C-2V		○	○		
Panel Jack	UG-291/U(40)	302-0036-5-40	RG-55/U, 58/U	○		○		
	3CA-PJ2(40)	302-0205-0-40	RG-58/U, 58/U	○		○		
	UG-262/U(40)	302-0007-7-40	RG-59/U, 62/U	○		○		
	BNC-PJ-58(40)	302-0108-4-40	RG-55/U, 58/U	○		○		
	BNC-PJ-188/U(40)	302-0230-8-40	RG-188A/U		○	○		
	BNC-PJ-196/U(40)	302-0194-6-40	RG-196A/U	○			○	
	3CW-PJ(40)	302-0139-8-40	3C-2W	○		○		
	BNC-PJ-2.5DV(40)	302-0238-0-40	2.5D-2V	○		○		
	BNC-PJ-1.5(40)	302-0228-6-40	1.5D-2W		○	○		
	BNC-PJ-1.5W-1(40)	302-0260-9-40			○	○		
	BNC-PJ-1.5W-2(40)	302-0282-1-40			○	○		
	BNC-BPJ-1.5W(40)	302-0284-7-40			○	○		
	BNC-BPJ-1.5W-1(40)	302-0289-0-40			○	○		
	BNC-BPJ-1.5DW(40)	302-0400-6-40			○		○	

Feb.1.2017 Copyright 2017 HIROSE ELECTRIC CO., LTD. All Rights Reserved.

The product information in this catalog is for reference only. Please request the Engineering Drawing for the most current and accurate design information.

BNC SERIES RF CO-AXIAL CONNECTORS

Type		Part No.	HRS No.	Applicable cable	Surface treatment				Remarks
					Armor		Center contact		
					Silver	Nickel	Silver	Gold	
Panel jack		BNC-PJ-1.5DV-1(40)	302-0285-0-40	1.5D-2V		○	○		
		BNC-BPJ-1.5-1(40)	302-0252-0-40			○		○	
		BNC-BPJ-1.5DV(40)	302-0393-2-40			○			
		3CV-PJ2(40)	302-0204-8-40	3C-2V	○		○		
L-shaped Panel jack		BNC-LPJ-1.5(40)	302-0255-9-40	1.5D-2V		○	○		
Receptacle	Flange type	U-290/U(40)	302-0009-2-40	4-M2.6X0.45	○		○		
		3C-R(40)	302-0031-1-40	4-φ3	○		○		
		BNC-R-12(40)	302-0229-9-40			○		○	
		BNC-R-13(40)	302-0239-2-40			○		○	
		BNC-R-14(40)	302-0245-5-40			○	○		
	Bulk head type	UG-604/U(40)	302-0016-8-40		○		○		
		UG-625/U(40)	302-0017-0-40		○		○		
		UG-625/U-4(40)	302-0221-7-40			○	○		
		UG-625/U-10(40)	302-0253-3-40	Folk terminal		○	○		
		UG-625/U-11A(40)	302-0274-3-40			○	○		
		UG-657/U(40)	302-0012-7-40	drip-proof type	○		○		
		UG-657/U-E(40)	302-0080-7-40	drip-proof type	○		○		

Feb.1.2017 Copyright 2017 HIROSE ELECTRIC CO., LTD. All Rights Reserved.

The product information in this catalog is for reference only. Please request the Engineering Drawing for the most current and accurate design information.

BNC SERIES RF CO-AXIAL CONNECTORS

Type		Part No.	HRS No.	Applicable cable	Surface treatment				Remarks
					Armor		Center contact		
					Silver	Nickel	Silver	Gold	
Receptacle	Bulk head type	UG-1094/U(40)	302-0178-0-40		○		○		
		BNC-FBR(41)	302-0268-0-41	Insulation type PPO		○	○		
		BNC-FBR-W(40)	302-0279-7-40	Metal washer for BNC-FBR		○			
	L-shaped type	BNC-LR(40)	302-0020-5-40		○		○		
	Plug type	BNC-BPR-3(40)	302-0249-6-40			○		○	
	Straight type for PCB	BNC-R-PC(40)	302-0241-4-40			○	○		
		BNC-R-PC-2(40)	302-0243-0-40			○	○		
		BNC-R-PC-7(40)	302-0280-6-40			○	○		
	L-shaped type for PCB	BNC-LR-PC(40)	302-0242-7-40			○	○		
		BNC-LR-PC-1(40)	302-0262-4-40			○	○		
		BNC-LR-PC-3(40)	302-0276-9-40			○	○		
	Ground lug plate	BNC-EL	302-0079-8		○				

Feb.1.2017 Copyright 2017 HIROSE ELECTRIC CO., LTD. All Rights Reserved.

The product information in this catalog is for reference only. Please request the Engineering Drawing for the most current and accurate design information.

BNC SERIES RF CO-AXIAL CONNECTORS

Type	Part No.	HRS No.	Applicable cable	Surface treatment				Remarks
				Armor		Center contact		
				Silver	Nickel	Silver	Gold	
Adaoter	BNC-A-JJ(40)	302-0039-3-40		○		○		
	BNC-A-JJ-1(40)	302-0050-6-40		○		○		
	BNC-PA-JJ(40)	302-0052-1-40		○		○		
	UG-414/U(40)	302-0040-2-40	PA-JJ type	○		○		
	UG-491/U(40	302-0022-0-40	A-PP type	○		○		
L-shaped adapter	UG-306/U(40)	302-0023-3-40	LA-PJ type	○		○		
T-shaped adapter	BNC-TA-JJJ(40)	302-0024-6-40		○		○		
	UG-274/U(40)	302-0025-9-40	(TA-JP type)	○		○		
U ring	BNC-UPA(40)	302-0167-3-40	35-mm movable	○		○		
Cap	CW-123A/U(40)	302-0041-5-40	For jack	○		○		
Plug shot	JCW-159/U(40)	302-0026-1-40		○		○		

Feb.1.2017 Copyright 2017 HIROSE ELECTRIC CO., LTD. All Rights Reserved.

The product information in this catalog is for reference only. Please request the Engineering Drawing for the most current and accurate design information.

BNC SERIES RF CO-AXIAL CONNECTORS

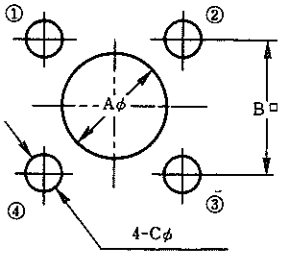

Fig.1

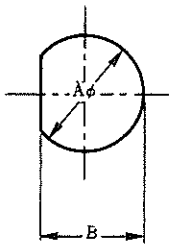

Fig.2

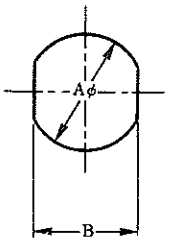

Fig.3

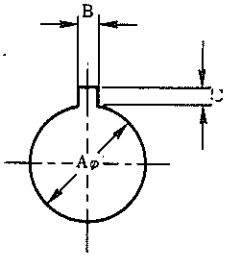

Fig.4

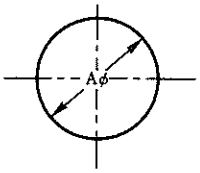

Fig.5

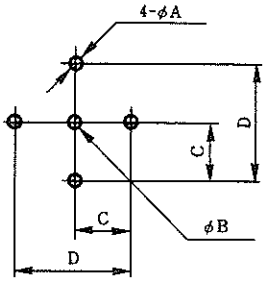

Fig.6

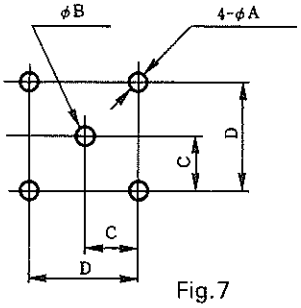

Fig.7

Fig.	No.	A	B	C	D
1	1-1	11.4	12.7	3	—
	1-2	11.4	12.7	3.2	—
	1-3	9.8	12.7	3	—
	1-4	5.3	12.7	3	—
	1-5	12.3	12.7	3.2	—
	1-6	14.3	12.7	3.2	—
	1-7	9.8	12.7	3	—
	1-8	9.8	12.7	3.2	—
	1-9	9.8	12.7	①-③ 3 ②-④ 3.2	—
	1-10	9	12.7	3	—
	1-11	9	12.7	3.2	—
	1-12	4.3	12.7	3.2	—
	1-13	15	18.2	3.4	—
	1-14	7	12.7	3	—

Fig.	No.	A	B	C	D
2	2-1	$9.6^{+0.1}_{0}$	$9^{+0.1}_{0}$	—	—
	2-2	$9.6^{+0.1}_{0}$	$8.5^{+0.1}_{0}$	—	—
	2-3	$11.3^{+0.1}_{0}$	$10.3^{+0.1}_{0}$	—	—
	2-4	$9.6^{+0.1}_{0}$	$8.8^{+0.1}_{0}$	—	—
	2-5	$12.1^{+0.1}_{0}$	$11.1^{+0.1}_{0}$	—	—
3	3-1	$9.6^{+0.1}_{0}$	$8.1^{+0.1}_{0}$	—	—
	3-2	$9.6^{+0.1}_{0}$	$8.3^{+0.1}_{0}$	—	—
	3-3	$9.6^{+0.1}_{0}$	$8.6^{+0.1}_{0}$	—	—
4	4-1	$12.7^{+0.1}_{0}$	$1.3^{+0.1}_{0}$	$1.8^{+0.1}_{0}$	—
5	5-1	$12.7^{+0.1}_{0}$	—	—	—
6	6-1	$1.6^{+0.1}_{0}$	$1.6^{+0.1}_{0}$	$5.08^{\pm0.05}$	$10.16^{\pm0.05}$
7	7-1	$1.8^{+0.1}_{0}$	$1.8^{+0.1}_{0}$	$5.08^{\pm0.05}$	$10.16^{\pm0.05}$
	7-2	$1.\ ^{+0.1}_{0}$	$1.4^{+0.1}_{0}$	$3.81^{\pm0.05}$	$7.62^{\pm0.05}$

Feb.1.2017 Copyright 2017 HIROSE ELECTRIC CO., LTD. All Rights Reserved.

The product information in this catalog is for reference only. Please request the Engineering Drawing for the most current and accurate design information.

BNC SERIES RF CO-AXIAL CONNECTORS

Functional drawing

Typical part numbers are enclosed in parentheses

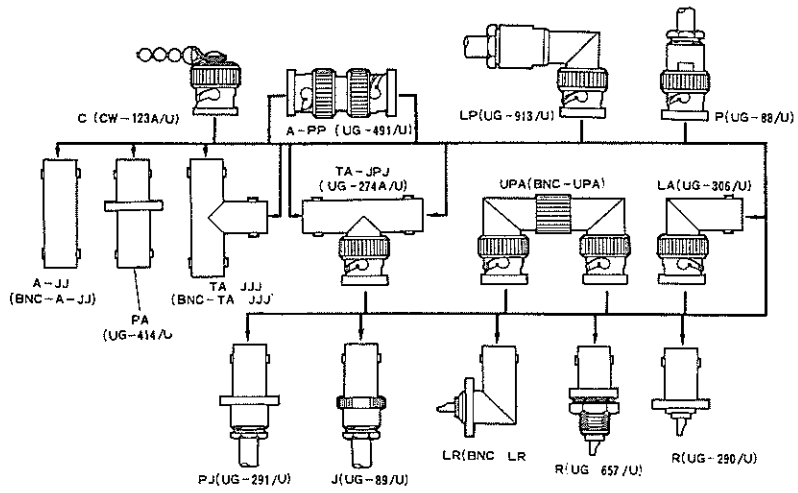

Table 1. End processing dimensions arranged by part number

(Unit : mm)

HRS No.	Part No.	$L_1{}^{0}_{-0.5}$	$L_2 \pm 0.1$	L_3
CL302-0001-0-40	UG-88/U(40)	7.5	3	2.9
CL302-0002-3-40	UG-260/U(40)	7.6	3	2.9
CL302-0006-4-40	3CV-J(40)	7.4	3	3.2
CL302-0007-7-40	UG-262/U(40)	7.3	3	2.9
CL302-0034-0-40	UG-89/U(40)	7.5	3	2.9
CL302-0035-2-40	UG-261/U(40)	7.3	3	2.9
CL302-0036-5-40	UG-291/U(40)	7.5	3	2.9
CL302-0043-0-42	UG-913/U(42)	7.4	3	2.4
CL302-0070-3-40	UG-88D/U(40)	7.6	3	2.7
CL302-0129-4-40	3DW-P2(40)	10	3	5
CL302-0132-9-40	BNC-P-5DV(40)	11.4	2.5	5
CL302-0152-6-40	3CF-P(40)	10	3	5
CL302-0157-0-40	3CV-PL(40)	9.4	1.8	5.3
CL302-0202-2-40	3CV-P2(40)	9.6	3	5
CL302-0203-5-40	3CA-P2(40)	9.6	3	5
CL302-0204-8-40	3CV-PJ2(40)	7	3	2.8
CL302-0205-0-40	3CA-PJ2(40)	7	3	2.8
CL302-0209-1-40	3CW-P(40)	10.4	3	5
CL302-0210-0-40	3CT-P(40)	10.9	3	5

Connecting methods

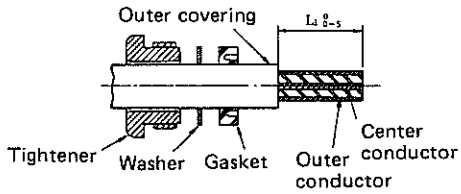

The ends are processed as shown in the drawing (refer to Table 1). For the end processing dimensions L_1, refer to Table 1, End processing dimensions arranged by part number.

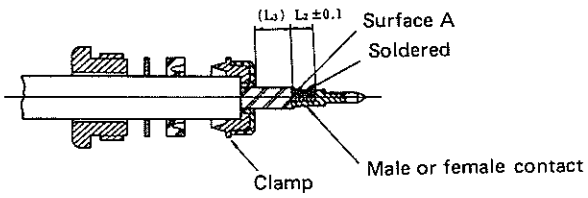

(1) Insert clamp from tip of cable and fold outer conductor of cable back onto clamp. Using a knife, cut off excess outer conductor left at this time.

(2) Cut off center conductor of cable at L_2, from surface A of cable insulation. For end processing dimensions L_2, L_3, refer to Table 1, End processing dimensions arranged by part (L_3 is a reference dimension.)
(Note: Be careful not to damage center conductor.)

(3) Solder contact and center conductor. It is a good idea at this time to solder the terminal preliminarily in advance. (Note: There must be no gap between the end and the cable insulation.)

Insert cable and parts into shell and tighten tightening nut sufficiently.

Feb.1.2017 Copyright 2017 HIROSE ELECTRIC CO., LTD. All Rights Reserved.

The product information in this catalog is for reference only. Please request the Engineering Drawing for the most current and accurate design information.

Assembling methods

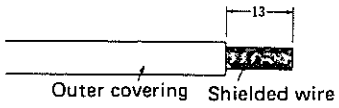

1. Cut off 13mm of the cable's outer covering and expose the shielded wire.

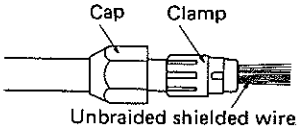

2. Put the cap through the cable, insert the clamp, and unbraid the shielded wire.

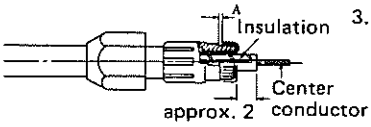

3. Wind the shielded wire onto the clamp. At this time, cut off the shielded wire at position A in the drawing, leaving some gap.

4. Cut off the insulation, leaving about 2mm of it.

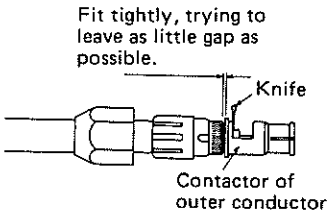

5. Fit the contactor of the outer conductor tightly onto the clamp, position a knife on the notched window, and cut off the insulation.
Take care not to damage the center conductor at this time.

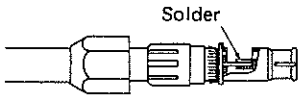

6. Solder the center conductor with the contactor of the outer conductor fitting tightly onto the clamp.

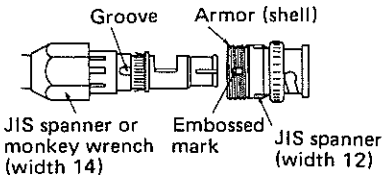

7. Insert the block described above so that it will fit into the groove on the clamp and the embossed mark on the armor. Tighten the cap thoroughly. The tools used are a JIS spanner (width 12) and a JIS spanner or monkey wrench (width 14).

Feb.1.2017 Copyright 2017 HIROSE ELECTRIC CO., LTD. All Rights Reserved.

Mouser Electronics

Authorized Distributor

Click to View Pricing, Inventory, Delivery & Lifecycle Information:

Hirose Electric:

BNC-J-1.5WCR(40) BNC-J-178/U BNC-J-1.5WCR(41) BNC-BPR-3(40) BNC-J-1.5CR(40)