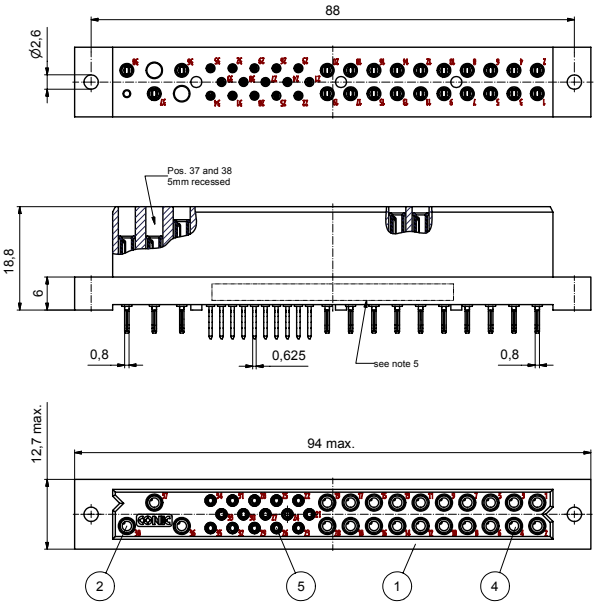

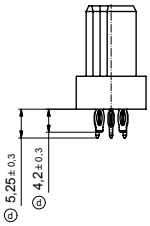

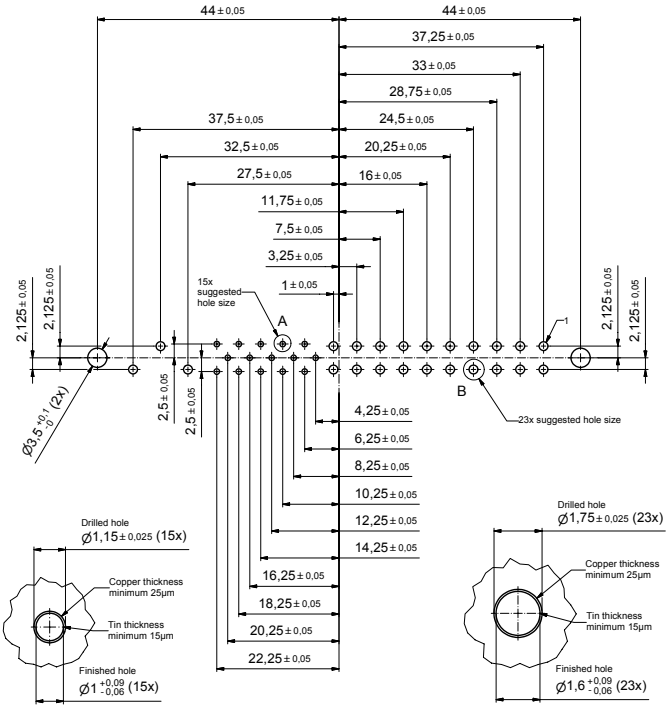

A (10 : 1)

PCB hole pattern

B (10 : 1)

NOTES:

1. MATERIALS AND FINISHES:
   - INSULATOR: GLASS FILLED PLASTIC UL 94 V-0 RATED, GREY RAL 7035 (b)
   - CONTACTS: COPPER ALLOY, PLATING: FLASH GOLD OVER NICKEL
2. ELECTRICAL CHARACTERISTICS:
   CREEPING AND CLEARANCE DISTANCE; MINIMUM:
   - CONTACT 38 TO CONTACT 37: 2,5 MM
   - CONTACT 38 TO CONTACT 36: 3,2 MM
   - CONTACT 37 TO CONTACT 36: 3,2 MM
   - CONTACT 38 TO SIGNAL CONTACTS: 6,4 MM
   - CONTACT 37 TO SIGNAL CONTACTS: 6,4 MM
   - CONTACT 36 TO SIGNAL CONTACTS: 2,0 MM
   CONTACT CURRENT RATING:
   - POWER CONTACTS POS. 36-38: 40 AMPERES CONTINUOUS, ALL CONTACTS UNDER LOAD
   - POWER CONTACTS POS. 1-20: 28 AMPERES CONTINUOUS, ALL CONTACTS UNDER LOAD
   - SIGNAL CONTACTS: 5 AMPERES NOMINAL
   INITIAL CONTACT RESISTANCE PER IEC 512-2, TEST 2b:
   - POWER CONTACTS: 0,0007 OHM MAX.
   - SIGNAL CONTACTS: 0,004 OHM MAX.
   INSULATION RESISTANCE: 5 G OHM PER IEC 512-2, TEST 3a, METHOD A
3. WORKING TEMPERATURE: -55°C TO +125°C
4. PRESS-FIT PART OF CONTACTS ARE PATENT PROTECTED
5. CONNECTOR IS PART MARKED: PART-NO. CONEC ABC

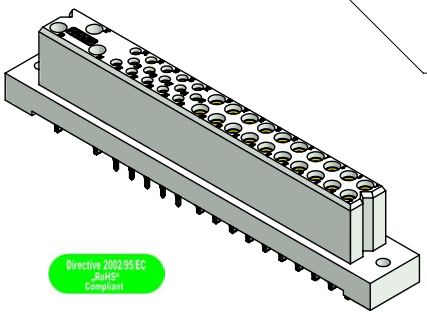

Directive 2002/95/EC „RoHS" Compliant

quantity	part description	item	dwg no. / norm	material
15	Signal contact (Pos. 21-35)	5		
20	Power contact type 3 (Pos. 1-20)	4		
1	Power contact type 2 (Pos. 36)	3		
2	Power contact type 1 (Pos. 37-38)	2		
1	Case 38pos. female	1		

partlist

THIS DRAWING MAY NOT BE COPIED OR REPRODUCED IN ANY WAY, AND MAY NOT BE PASSED ON TO A THIRD PARTY WITHOUT WRITTEN PERMISSION OF THE OWNERSHIP AND COPYRIGHT OF CONEC GmbH

DO NOT ALTER CAD DRAWING BY HAND

rev.	description	date	name
2 x d	Ä 2867	14.11.07	HS
1x c	Ä 2207	18.04.05	Mef.
1x b	Ä 2168	21.02.05	Mef.

finish: see notes

tolerance ISO 2768-m

dim. in mm

	date	name
drawn	10.02.05	Mankopf
appd.	10.02.05	Kühle
norm		
d-old		

scale: 2:1

material: see notes

title: SOCKET CONNECTOR 38pos.
PRESS-FIT STRAIGHT
CompactPCI

dwg no: Inventor 45K1A002

DIN-A2

sh: 1

part no: CPH38W23FGE3SK9X (c)

Downloaded from Elcodis.com electronic components distributor