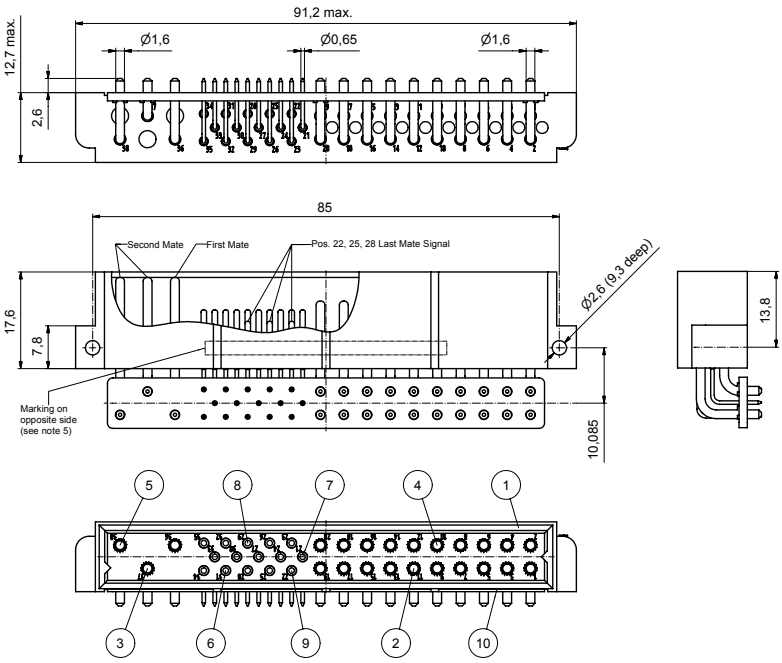

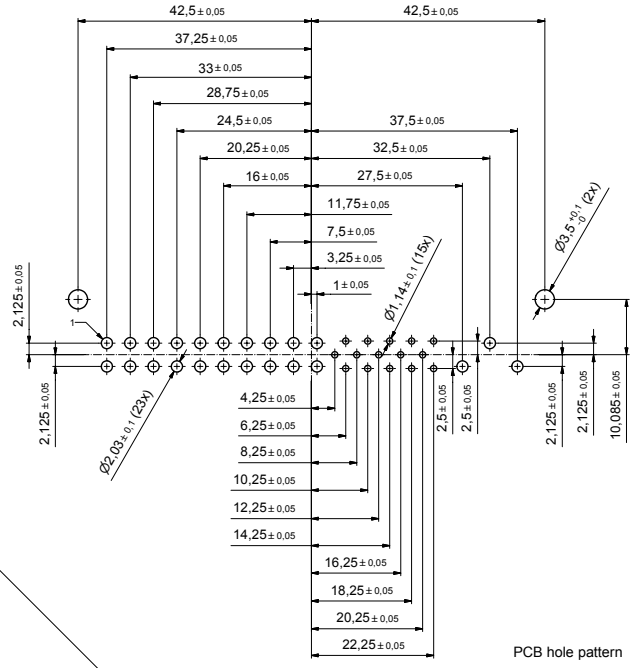

PCB hole pattern

NOTES:

1. MATERIALS AND FINISHES:
   - INSULATOR: GLASS FILLED PLASTIC UL 94 V-0 RATED, GREY RAL 7035 (b)
   - CONTACTS: COPPER ALLOY, PLATING: FLASH GOLD OVER NICKEL
2. ELECTRICAL CHARACTERISTICS:
   CREEPING AND CLEARANCE DISTANCE; MINIMUM:
   - CONTACT 38 TO CONTACT 37: 2,5 MM
   - CONTACT 38 TO CONTACT 36: 3,2 MM
   - CONTACT 37 TO CONTACT 36: 3,2 MM
   - CONTACT 38 TO SIGNAL CONTACTS: 6,4 MM
   - CONTACT 37 TO SIGNAL CONTACTS: 6,4 MM
   - CONTACT 36 TO SIGNAL CONTACTS: 2,0 MM
   CONTACT CURRENT RATING:
   - POWER CONTACTS POS. 36-38: 40 AMPERES CONTINUOUS, ALL CONTACTS UNDER LOAD
   - POWER CONTACTS POS. 1-20: 28 AMPERES CONTINUOUS, ALL CONTACTS UNDER LOAD
   - SIGNAL CONTACTS: 5 AMPERES NOMINAL
   INITIAL CONTACT RESISTANCE PER IEC 512-2, TEST 2b:
   - POWER CONTACTS: 0,0007 OHM MAX.
   - SIGNAL CONTACTS: 0,004 OHM MAX.
   INSULATION RESISTANCE: 5 G OHM PER IEC 512-2, TEST 3a, METHOD A
3. WORKING TEMPERATURE: -55°C TO +125°C
4. ORDER OF CONTACT MATING:
   1. MATE: POS. 36 / 2. MATE: POS. 37, 38 / LAST MATE: POS. 22, 25, 28
5. CONNECTOR IS PART MARKED: PART-NO. CONEC ABC

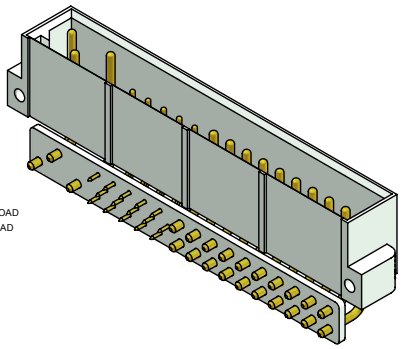

Directive 2002/95/EC „RoHS" Compliant

quantity	part description	item	dwg no. / norm	material
1	Fixing plate	10		
3	Signal contact type 4 (Pos. 22,25,28)	9		
5	Signal contact type 3 (Pos. 23,26,29,32,35)	8		
5	Signal contact type 2 (Pos. 21,24,27,30,33)	7		
2	Signal contact type 1 (Pos. 31,34)	6		
2	Power contact type 4 (Pos. 36,38)	5		
10	Power contact type 3 (Pos. 2,4,6,8,10,12,14,16,18,20)	4		
1	Power contact type 2 (Pos. 37)	3		
10	Power contact type 1 (Pos. 1,3,5,7,9,11,13,15,17,19)	2		
1	Case 38pos. male angled inverted	1		

partlist

THIS DRAWING MAY NOT BE COPIED OR REPRODUCED IN ANY WAY, AND MAY NOT BE PASSED ON TO A THIRD PARTY WITHOUT WRITTEN PERMISSION OF THE OWNERSHIP AND COPYRIGHT OF CONEC GmbH

DO NOT ALTER CAD DRAWING BY HAND

rev.	description	date	name
1x b	Ä 2168	21.02.05	Mef.

finish: see notes

tolerance ISO 2768-m

dim. in mm

	date	name
drawn	12.01.05	Mankopf
appd.	12.01.05	E. Mickenbecker
norm		
d-old		

CONEC

scale: 2:1

material: see notes

title: PLUG CONNECTOR 38pos.
SOLDER PIN ANGLED, INVERTED
CompactPCI

dwg no: Inventor

45K1A004

DIN-A2

sh: 1

part no: CPH38W23MARARK9X

Downloaded from Elcodis.com electronic components distributor