COOPER COILTRONICS®

COOPER Bussmann

ECONO-PAC™/OCTA-PAC® OCTA-PAC® PLUS
Power Inductors and Transformers

RoHS 2002/95/EC

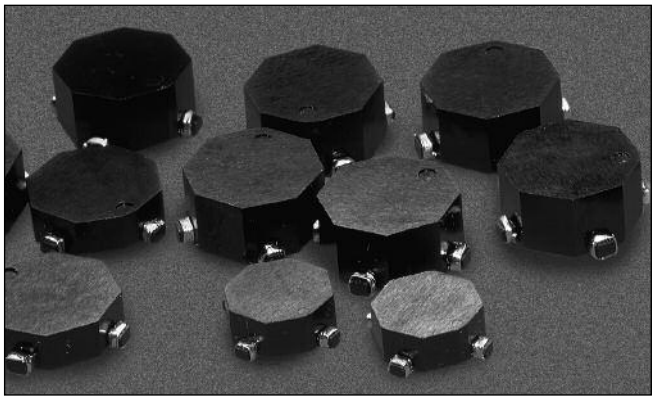

Description

- Surface mount magnetics that can be used as single or coupled inductors or 1:1 transformers that provide isolation between two windings
- OCTA-PAC's are designed around high frequency, low loss core material
- ECONO-PAC's are a lower cost version of OCTA-PAC's offering high saturation flux density, Powder Iron core material
- OCTA-PAC PLUS's offer higher current ratings and higher saturation flux densities than OCTA-PAC and ECONO-PAC, Amorphous metal core material
- Secure 4 Terminal Mounting
- Inductor more versatile inductance combination by series or parallel connections

Applications

- Computer and portable power devices
- LCD panels, DVD players
- Inductor: DC-DC converters
- Buck, boost, forward, and resonant converters
- Noise filtering and filter chokes
- Transformers: 1:1 300Vdc isolation, flyback, sepic

Environmental Data

- Storage temperature range: -40°C to +125°C
- Operating ambient temperature range: -40°C to +85°C (range is application specific).
- Solder reflow temperature: +260°C max. for 10 seconds max.

Packaging

- Supplied in tape and reel packaging, 1100 (EP01, OPA1, and OP01), 800 (EP02, OP02, OPA2, EP03, OPA3, and OP03), and 600 (EP04, OPA4, and OP04) per reel

Legend

Marking
- CTX___-__ (First three digits CTX; Second 2-3 digits = Inductance Value; Last 1-2 digits, product size & type)

Product Size/Type
- CTX___-1 (-1 = size; no suffix = OCTA-PAC®)
- CTX___-1P (-1 = size; P suffix = ECONO-PAC™)
- CTX___-1A (-1 = size; A suffix = OCTA-PAC® PLUS)

	PARALLEL				SERIES			
Part Number	Open Circuit Inductance µH +/-20%	Full Load Inductance µH min.	Full Load Current Adc	DC Resistance ohms max.	Open Circuit Inductance µH +/-20%	Full Load Inductance µH min.	Full Load Current Adc	DC Resistance ohms max.
CTX0.47-1P-R	.42	.31	5.50	.005	1.67	1.25	2.75	.021
CTX0.68-1P-R	.60	.43	5.10	.006	2.40	1.74	2.55	.025
CTX1-1P-R	1.07	.73	4.50	.008	4.28	2.92	2.25	.032
CTX2-1P-R	2.02	1.36	3.40	.013	8.08	5.44	1.70	.054
CTX5-1P-R	4.83	3.37	2.00	.040	19.31	13.47	1.00	.161
CTX8-1P-R	8.08	5.31	1.80	.052	32.33	21.23	.90	.207
CTX10-1P-R	9.62	6.23	1.70	.057	38.48	24.94	.85	.227
CTX15-1P-R	15.03	9.62	1.40	.087	60.12	38.47	.70	.348
CTX20-1P-R	20.46	14.12	1.00	.158	81.83	56.47	.50	.634
CTX25-1P-R	25.40	17.07	.96	.177	101.60	68.29	.48	.708
CTX33-1P-R	32.33	22.27	.80	.250	129.32	89.06	.40	1.001
CTX50-1P-R	50.52	33.57	.70	.316	202.07	134.27	.35	1.263
CTX68-1P-R	68.40	43.65	.66	.373	273.61	174.61	.33	1.490
CTX100-1P-R	99.01	63.64	.54	.557	396.06	254.55	.27	2.227
CTX150-1P-R	150.72	96.64	.44	.844	602.87	386.56	.22	3.376
CTX200-1P-R	198.41	130.79	.36	1.208	793.65	523.16	.18	4.831
CTX300-1P-R	299.87	190.05	.32	1.525	1199.46	760.19	.16	6.100
CTX0.47-2P-R	.54	.42	5.90	.006	2.18	1.69	2.95	.024
CTX0.68-2P-R	.85	.64	5.40	.007	3.40	2.55	2.70	.029
CTX1-2P-R	1.22	.89	5.00	.008	4.90	3.57	2.50	.033
CTX2-2P-R	2.18	1.56	3.90	.014	8.70	6.26	1.95	.055
CTX5-2P-R	4.90	3.57	2.50	.032	19.58	14.26	1.25	.128
CTX8-2P-R	7.65	5.31	2.30	.040	30.60	21.23	1.15	.158
CTX10-2P-R	9.83	6.73	2.10	.045	39.30	26.92	1.05	.179
CTX15-2P-R	14.99	10.51	1.60	.085	59.98	42.02	.80	.339
CTX20-2P-R	19.58	13.37	1.50	.097	78.34	53.48	.75	.387
CTX25-2P-R	24.79	16.60	1.40	.109	99.14	66.38	.70	.436
CTX33-2P-R	32.67	21.29	1.30	.126	130.70	85.17	.65	.503
CTX50-2P-R	49.10	35.31	.82	.305	196.38	141.24	.41	1.221
CTX68-2P-R	68.85	47.93	.76	.362	275.40	191.71	.38	1.445
CTX100-2P-R	99.14	69.56	.62	.541	396.58	278.22	.31	2.162
CTX150-2P-R	148.10	100.07	.56	.665	592.42	400.27	.28	2.660
CTX200-2P-R	201.59	138.49	.46	.951	806.34	553.97	.23	3.804
CTX300-2P-R	300.42	197.52	.42	1.176	1201.70	790.08	.21	4.703

Part Number	PARALLEL Open Circuit Inductance µH +/-20%	PARALLEL Full Load Inductance µH min.	PARALLEL Full Load Current Adc	PARALLEL DC Resistance ohms max.	SERIES Open Circuit Inductance µH +/-20%	SERIES Full Load Inductance µH min.	SERIES Full Load Current Adc	SERIES DC Resistance ohms max.
CTX0.47-3P-R	.46	.35	6.20	.006	1.85	1.42	3.10	.025
CTX0.68-3P-R	.67	.50	5.70	.007	2.66	1.98	2.85	.028
CTX1-3P-R	.91	.65	5.40	.008	3.63	2.62	2.70	.032
CTX2-3P-R	1.85	1.24	4.60	.011	7.40	4.97	2.30	.045
CTX5-3P-R	4.74	3.04	3.20	.022	18.94	12.15	1.60	.090
CTX8-3P-R	8.16	4.90	2.80	.030	32.63	19.60	1.40	.119
CTX10-3P-R	9.79	5.71	2.70	.033	39.15	22.85	1.35	.131
CTX15-3P-R	14.50	8.50	2.20	.050	58.02	34.01	1.10	.198
CTX20-3P-R	20.15	13.12	1.50	.111	80.59	52.48	.75	.443
CTX25-3P-R	25.33	16.16	1.40	.125	101.31	64.66	.70	.499
CTX33-3P-R	32.63	20.32	1.30	.146	130.54	81.30	.65	.571
CTX50-3P-R	50.02	33.06	.92	.277	200.10	132.24	.46	1.108
CTX68-3P-R	68.84	44.15	.84	.328	275.35	176.61	.42	1.312
CTX100-3P-R	101.31	65.50	.68	.501	405.22	262.02	.34	2.005
CTX150-3P-R	149.85	90.92	.64	.621	599.40	363.68	.32	2.483
CTX200-3P-R	200.10	116.51	.60	.731	800.38	466.03	.30	2.925
CTX300-3P-R	298.39	172.12	.50	.926	1193.55	688.50	.25	3.702
CTX0.47-4P-R	.49	.37	7.90	.005	1.95	1.49	3.95	.019
CTX0.68-4P-R	.76	.56	7.20	.006	3.05	2.24	3.60	.023
CTX1-4P-R	1.10	.81	5.90	.008	4.39	3.24	2.95	.033
CTX2-4P-R	1.95	1.42	4.60	.014	7.81	5.69	2.30	.055
CTX5-4P-R	5.15	3.56	3.30	.027	20.62	14.23	1.65	.107
CTX8-4P-R	7.81	5.15	3.00	.033	31.23	20.61	1.50	.131
CTX10-4P-R	9.88	6.70	2.50	.047	39.53	26.79	1.25	.187
CTX15-4P-R	14.76	9.52	2.30	.057	59.05	38.09	1.15	.228
CTX20-4P-R	20.62	13.44	1.90	.084	82.47	53.76	.95	.337
CTX25-4P-R	25.65	17.17	1.60	.115	102.60	68.68	.80	.461
CTX33-4P-R	33.21	22.93	1.30	.166	132.86	91.72	.65	.662
CTX50-4P-R	48.80	32.21	1.20	.201	195.20	128.83	.60	.805
CTX68-4P-R	67.37	43.04	1.10	.238	269.50	172.16	.55	.952
CTX100-4P-R	99.09	69.54	.72	.565	396.38	278.15	.36	2.259
CTX150-4P-R	149.45	101.46	.64	.696	597.80	405.83	.32	2.784
CTX200-4P-R	200.11	131.37	.60	.810	800.44	525.47	.30	3.240
CTX300-4P-R	298.93	188.03	.54	1.003	1195.72	752.13	.27	4.011
CTX0.47-1-R	.40	.26	5.50	.005	1.60	1.05	2.75	.020
CTX0.68-1-R	.63	.41	4.50	.006	2.50	1.63	2.25	.024
CTX1-1-R	.90	.56	4.20	.007	3.60	2.24	2.10	.028
CTX2-1-R	2.03	1.00	4.10	.010	8.10	4.01	2.05	.040
CTX5-1-R	4.90	2.66	2.30	.030	19.60	10.64	1.15	.122
CTX8-1-R	8.10	4.08	2.00	.039	32.40	16.34	1.00	.157
CTX10-1-R	10.00	4.85	1.90	.044	40.00	19.40	.95	.176
CTX15-1-R	14.40	8.74	1.10	.080	57.60	34.96	.55	.319
CTX20-1-R	19.60	11.54	1.00	.146	78.40	46.15	.50	.583
CTX25-1-R	25.60	16.35	.74	.167	102.40	65.42	.37	.668
CTX33-1-R	32.40	19.84	.72	.293	129.60	79.37	.36	1.171
CTX50-1-R	50.63	29.34	.64	.365	202.50	117.38	.32	1.461
CTX68-1-R	67.60	39.73	.54	.516	270.40	158.92	.27	2.064
CTX100-1-R	99.23	58.72	.44	.784	396.90	234.88	.22	3.137
CTX150-1-R	148.23	85.16	.38	.965	592.90	340.64	.19	3.861
CTX200-1-R	202.50	107.60	.37	1.142	810.00	430.39	.19	4.567
CTX300-1-R	302.50	191.38	.22	1.431	1210.00	765.54	.11	5.724
CTX0.47-2-R	.42	.29	6.50	.005	1.69	1.17	3.25	.019
CTX0.68-2-R	.75	.50	5.50	.006	3.01	1.98	2.75	.024
CTX1-2-R	1.18	.76	4.60	.007	4.70	3.04	2.30	.028
CTX2-2-R	2.30	1.27	4.50	.010	9.21	5.07	2.25	.038
CTX5-2-R	4.70	2.66	3.00	.021	18.80	10.65	1.50	.084
CTX8-2-R	7.94	4.18	2.60	.027	31.77	16.72	1.30	.108
CTX10-2-R	10.58	5.18	2.50	.031	42.30	20.72	1.25	.125
CTX15-2-R	15.23	8.53	1.70	.059	60.91	34.10	.85	.236
CTX20-2-R	20.73	12.36	1.30	.107	82.91	49.46	.65	.426
CTX25-2-R	24.86	16.09	1.00	.117	99.45	64.35	.50	.466
CTX33-2-R	31.77	15.90	1.40	.105	127.09	63.59	.70	.420
CTX50-2-R	51.18	28.79	.92	.210	204.73	115.16	.46	.839
CTX68-2-R	67.87	38.71	.78	.303	271.47	154.83	.39	1.214
CTX100-2-R	99.45	57.45	.63	.457	397.81	229.79	.32	1.828

Part Number	PARALLEL Open Circuit Inductance µH +/-20%	PARALLEL Full Load Inductance µH min.	PARALLEL Full Load Current Adc	PARALLEL DC Resistance ohms max.	SERIES Open Circuit Inductance µH +/-20%	SERIES Full Load Inductance µH min.	SERIES Full Load Current Adc	SERIES DC Resistance ohms max.
CTX150-2-R	147.39	93.46	.43	.560	589.57	373.84	.22	2.241
CTX200-2-R	198.58	122.94	.39	.796	794.30	491.76	.20	3.184
CTX300-2-R	300.80	169.06	.38	1.231	1203.20	676.24	.19	4.929
CTX0.47-3-R	.38	.27	6.00	.005	1.54	1.08	3.00	.020
CTX0.68-3-R	.60	.42	5.00	.006	2.40	1.67	2.50	.024
CTX1-3-R	.86	.57	4.80	.007	3.46	2.28	2.40	.028
CTX2-3-R	1.94	1.05	4.70	.010	7.78	4.22	2.35	.040
CTX5-3-R	4.70	2.56	3.00	.019	18.82	10.26	1.50	.077
CTX8-3-R	7.78	3.74	2.80	.025	31.10	14.98	1.40	.099
CTX10-3-R	9.60	4.38	2.70	.028	38.40	17.54	1.35	.111
CTX15-3-R	15.00	7.26	2.00	.043	60.00	29.06	1.00	.172
CTX20-3-R	20.18	10.76	1.50	.078	80.74	43.04	.75	.312
CTX25-3-R	24.58	15.64	.98	.086	98.30	62.56	.49	.346
CTX33-3-R	32.86	19.69	.96	.083	131.42	78.77	.48	.331
CTX50-3-R	50.78	27.18	.94	.239	203.14	108.71	.47	.956
CTX68-3-R	67.42	36.53	.80	.277	269.66	146.11	.40	1.109
CTX100-3-R	101.40	52.48	.70	.345	405.60	209.93	.35	1.381
CTX150-3-R	149.78	97.16	.38	.430	599.14	388.63	.19	1.718
CTX200-3-R	198.74	119.18	.39	.619	794.98	476.71	.20	2.475
CTX300-3-R	301.06	157.44	.40	.951	1204.22	629.75	.20	3.083
CTX0.47-4-R	.44	.32	7.00	.004	1.76	1.29	3.50	.016
CTX0.68-4-R	.78	.55	6.00	.005	3.14	2.21	3.00	.020
CTX1-4-R	1.23	.85	5.00	.006	4.90	3.41	2.50	.024
CTX2-4-R	1.76	1.06	4.90	.007	7.06	4.24	2.45	.028
CTX5-4-R	4.90	2.59	4.40	.014	19.60	10.37	2.20	.056
CTX8-4-R	8.28	4.29	3.50	.018	33.12	17.14	1.75	.072
CTX10-4-R	9.60	4.82	3.40	.019	38.42	19.28	1.70	.078
CTX15-4-R	14.16	6.76	3.00	.024	56.64	27.03	1.50	.096
CTX20-4-R	19.60	10.68	2.10	.055	78.40	42.73	1.05	.220
CTX25-4-R	25.92	13.32	2.00	.063	103.68	53.27	1.00	.253
CTX33-4-R	33.12	16.82	1.80	.072	132.50	67.27	.90	.287
CTX50-4-R	50.18	25.03	1.50	.111	200.70	100.11	.75	.443
CTX68-4-R	67.08	35.29	1.20	.157	268.32	141.15	.60	.630
CTX100-4-R	99.23	54.56	.92	.302	396.90	218.25	.46	1.210
CTX150-4-R	148.23	77.17	.82	.372	592.90	308.69	.41	1.488
CTX200-4-R	200.70	111.08	.64	.545	802.82	444.32	.32	2.180
CTX300-4-R	298.12	147.92	.62	.672	1192.46	591.66	.31	2.687

		Parallel Ratings					Series Ratings				
Part Number	Rated Inductance (µH)	OCL (1) nominal +/-25% (µH)	I sat. (2) Amperes Peak	I rms. (3) Amperes	DCR Ω (4) max. @ 20°C.	Volt (7) µ-Sec	OCL (1) nominal +/-25% (µH)	I sat. (2) Amperes Peak	I rms. (3) Amperes	DCR Ω (4) max. @ 20°C.	Volt (7) µ-Sec
CTX0.33-1A-R	0.33	0.402	12.5	10.0	0.0037	.93	1.61	6.25	4.98	0.015	1.86
CTX0.68-1A-R	0.68	0.752	9.4	9.0	0.0046	1.24	3.01	4.69	4.48	0.0185	2.49
CTX1-1A-R	1.0	1.18	7.5	7.26	0.0070	1.55	4.70	3.75	3.63	0.0282	3.11
CTX2-1A-R	2.0	2.30	5.36	5.64	0.012	2.17	9.21	2.68	2.82	0.0470	4.35
CTX5-1A-R	5.0	4.70	3.75	4.27	0.020	3.11	18.8	1.88	2.13	0.082	6.21
CTX8-1A-R	8.0	7.94	2.88	3.37	0.033	4.04	31.77	1.44	1.69	0.130	8.08
CTX10-1A-R	10.0	10.58	2.5	2.84	0.046	4.66	42.30	1.25	1.42	0.183	9.32
CTX15-1A-R	15.0	15.23	2.08	2.07	0.087	5.59	60.91	1.04	1.03	0.348	11.2
CTX20-1A-R	20.0	20.73	1.79	1.71	0.127	6.52	82.91	0.89	0.86	0.507	13.0
CTX25-1A-R	25.0	24.86	1.63	1.46	0.173	7.14	99.45	0.82	0.73	0.693	14.3
CTX33-1A-R	33.0	34.26	1.39	1.22	0.249	8.39	137.1	0.69	0.61	0.995	16.8
CTX50-1A-R	50.0	51.18	1.14	0.99	0.381	10.3	204.7	0.57	0.49	1.524	20.5
CTX68-1A-R	68.0	67.87	0.99	0.92	0.437	11.8	271.5	0.49	0.46	1.749	23.6
CTX100-1A-R	100.0	99.45	0.82	0.74	0.686	14.3	397.8	0.41	0.37	2.745	28.6
CTX150-1A-R	150.0	147.4	0.67	0.67	0.832	17.4	589.6	0.33	0.33	3.329	34.8
CTX200-1A-R	200.0	198.6	0.58	0.62	0.963	20.2	794.3	0.29	0.31	3.854	40.4
CTX300-1A-R	300.0	300.8	0.47	0.56	1.181	24.9	1203	0.23	0.28	4.726	49.7
CTX0.33-2A-R	0.33	0.284	18.8	10.9	0.0033	.85	1.14	9.38	5.47	0.0132	1.71
CTX0.68-2A-R	0.68	0.675	12.5	9.4	0.0045	1.28	2.70	6.25	4.68	0.0180	2.56
CTX1-2A-R	1.0	1.26	9.38	8.22	0.0058	1.71	5.06	4.69	4.11	0.0233	3.42
CTX2-2A-R	2.0	1.98	7.50	6.74	0.0090	2.14	7.90	3.75	3.37	0.035	4.27
CTX5-2A-R	5.0	5.06	4.69	4.34	0.021	3.42	20.22	2.34	2.17	0.084	6.84
CTX8-2A-R	8.0	7.90	3.75	3.50	0.032	4.27	31.60	1.88	1.75	0.129	8.55
CTX10-2A-R	10.0	11.38	3.13	2.89	0.047	5.13	45.50	1.56	1.45	0.188	10.3
CTX15-2A-R	15.0	15.48	2.68	2.69	0.054	5.98	61.94	1.34	1.35	0.218	12.0
CTX20-2A-R	20.0	20.22	2.34	2.24	0.078	6.84	80.90	1.17	1.12	0.313	13.7
CTX25-2A-R	25.0	25.60	2.08	1.89	0.111	7.69	102.38	1.04	0.94	0.443	15.4
CTX33-2A-R	33.0	34.84	1.79	1.56	0.162	8.97	139.4	0.89	0.78	0.649	17.9
CTX50-2A-R	50.0	49.38	1.50	1.28	0.240	10.7	197.5	0.75	0.64	0.961	21.4
CTX68-2A-R	68.0	66.44	1.29	1.07	0.342	12.4	265.8	0.65	0.54	1.367	24.8
CTX100-2A-R	100.0	102.38	1.04	0.75	0.695	15.4	409.5	0.52	0.38	2.778	30.8
CTX150-2A-R	150.0	152.9	0.85	0.68	0.842	18.8	611.8	0.43	0.34	3.366	37.6
CTX200-2A-R	200.0	197.5	0.75	0.64	0.950	21.4	790.0	0.38	0.32	3.800	42.7
CTX300-2A-R	300.0	303.7	0.60	0.58	1.174	26.5	1215	0.30	0.29	4.697	53.0
CTX0.33-3A-R	0.33	0.368	15.0	11.4	0.0032	0.97	1.47	7.50	5.72	0.0128	1.93
CTX0.68-3A-R	0.68	0.688	11.3	9.3	0.0048	1.29	2.75	5.63	4.64	0.0194	2.58
CTX1-3A-R	1.0	1.08	9.0	8.38	0.0059	1.61	4.20	4.50	4.19	0.0238	3.22
CTX2-3A-R	2.0	2.11	6.43	7.26	0.0079	2.26	8.43	3.21	3.63	0.0317	4.51
CTX5-3A-R	5.0	5.20	4.09	5.24	0.015	3.54	20.81	2.05	2.62	0.061	7.09
CTX8-3A-R	8.0	8.43	3.21	4.23	0.023	4.51	33.77	1.61	2.12	0.093	9.02
CTX10-3A-R	10.0	9.68	3.00	3.64	0.032	4.83	38.70	1.50	1.82	0.126	9.67
CTX15-3A-R	15.0	15.52	2.37	3.25	0.039	6.12	62.09	1.18	1.63	0.158	12.2
CTX20-3A-R	20.0	20.81	2.05	2.43	0.071	7.09	83.25	1.02	1.22	0.282	14.2
CTX25-3A-R	25.0	24.77	1.88	2.34	0.076	7.73	99.07	0.94	1.17	0.306	15.5
CTX33-3A-R	33.0	33.71	1.61	1.93	0.112	9.02	134.8	0.80	0.96	0.449	18.0
CTX50-3A-R	50.0	49.71	1.32	1.56	0.171	11.0	198.8	0.66	0.78	0.686	21.9

1) Open Circuit Inductance Test Parameters: 100kHz, 0.250 Vrms, 0.0 Adc
Parallel: (1,4 - 3,2) Series: (1 - 3) tie (2 - 4)
2) Peak current for approximately 30% roll-off
3) RMS current, delta temp. of 40° C ambient temperature of 85° C
4) DCR @ 20°C
5) Hipot rating: winding to winding: 300Vdc min.
6) Turns Ratio: (1-2):(4-3) 1:1
7) Applied volt-time product (v-us) across the inductor. This value represents the applied V-us at 300KHz necessary to generate a core loss equal to 10% of the total losses for a 40°C temperature rise.

		Parallel Ratings					Series Ratings				
Part Number	Rated Inductance (µH)	OCL (1) nominal +/-25% (µH)	I sat. (2) Amperes Peak	I rms. (3) Amperes	DCR Ω (4) max. @ 20°C.	Volt (7) µ-Sec	OCL (1) nominal +/-25% (µH)	I sat. (2) Amperes Peak	I rms. (3) Amperes	DCR Ω (4) max. @ 20°C.	Volt (7) µ-Sec
CTX68-3A-R	68.0	68.80	1.13	1.28	0.253	12.9	275.2	0.56	0.64	1.013	25.8
CTX100-3A-R	100.0	99.07	0.94	1.05	0.379	15.5	396.3	0.47	0.53	1.514	30.9
CTX150-3A-R	150.0	149.7	0.76	0.86	0.571	19.0	598.7	0.38	0.43	2.283	38.0
CTX200-3A-R	200.0	198.8	0.66	0.71	0.829	21.9	795.3	0.33	0.35	3.315	43.8
CTX300-3A-R	300.0	296.2	0.54	0.56	1.309	26.7	1185	0.27	0.28	5.236	53.5
CTX0.33-4A-R	0.33	0.313	22.5	12.2	0.0030	0.98	1.25	11.25	6.09	0.0119	1.96
CTX0.68-4A-R	0.68	0.744	15.0	10.6	0.0040	1.47	2.98	7.50	5.28	0.0158	2.94
CTX1-4A-R	1.0	1.39	11.25	9.23	0.0052	1.96	5.57	5.63	4.62	0.0207	3.93
CTX2-4A-R	2.0	2.18	9.00	8.38	0.0063	2.45	8.70	4.50	4.19	0.0251	4.91
CTX5-4A-R	5.0	4.26	6.43	7.21	0.0085	3.44	17.05	3.21	3.61	0.0339	6.87
CTX8-4A-R	8.0	8.70	4.50	5.49	0.015	4.91	34.80	2.25	2.74	0.059	9.81
CTX10-4A-R	10.0	10.53	4.09	4.67	0.020	5.40	42.11	2.05	2.33	0.081	10.8
CTX15-4A-R	15.0	14.70	3.46	3.87	0.029	6.38	58.81	1.73	1.94	0.117	12.8
CTX20-4A-R	20.0	19.58	3.00	3.62	0.034	7.36	78.30	1.50	1.81	0.135	14.7
CTX25-4A-R	25.0	25.14	2.65	3.02	0.048	8.34	100.51	1.32	1.51	0.193	16.7
CTX33-4A-R	33.0	34.80	2.25	2.49	0.071	9.81	139.2	1.13	1.25	0.283	19.6
CTX50-4A-R	50.0	50.11	1.88	2.05	0.104	11.8	200.4	0.94	1.03	0.418	23.6
CTX68-4A-R	68.0	68.21	1.61	1.70	0.153	13.7	272.8	0.80	0.85	0.612	27.5
CTX100-4A-R	100.0	100.57	1.32	1.37	0.235	16.7	402.3	0.66	0.69	0.939	33.4
CTX150-4A-R	150.0	153.5	1.07	1.10	0.365	20.6	613.9	0.54	0.55	1.462	41.2
CTX200-4A-R	200.0	200.4	0.94	0.92	0.521	23.6	801.8	0.47	0.46	2.085	47.1
CTX300-4A-R	300.0	302.8	0.76	0.75	0.787	29.0	1211	0.38	0.37	3.148	57.9

1) Open Circuit Inductance Test Parameters: 100kHz, 0.250 Vrms, 0.0 Adc
Parallel: (1,4 - 3,2) Series: (1 - 3) tie (2 - 4)
2) Peak current for approximately 30% roll-off
3) RMS current, delta temp. of 40° C ambient temperature of 85° C
4) DCR @ 20°C
5) Hipot rating: winding to winding: 300Vdc min.
6) Turns Ratio: (1-2):(4-3) 1:1
7) Applied volt-time product (v-us) across the inductor. This value represents the applied V-us at 300KHz necessary to generate a core loss equal to 10% of the total losses for a 40°C temperature rise.

Mechanical Diagrams

CTX 1, 1P, 1A Series

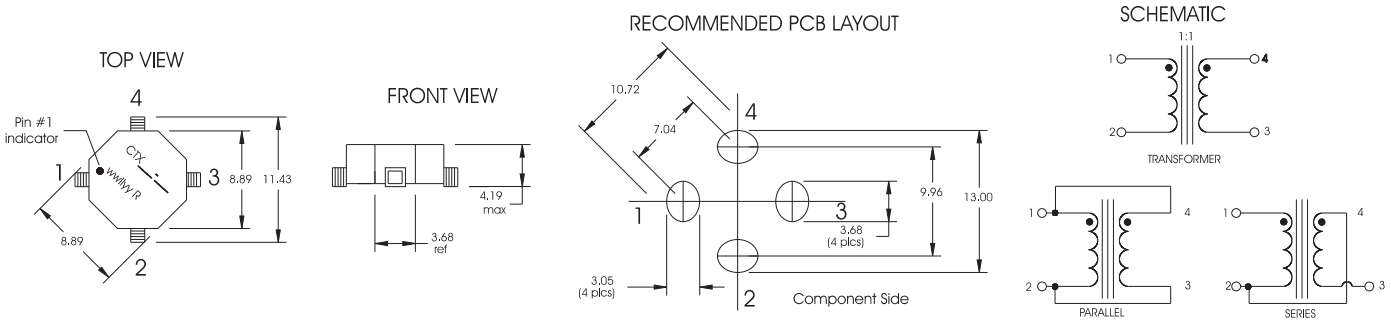

CTX 2, 2P, 2A Series

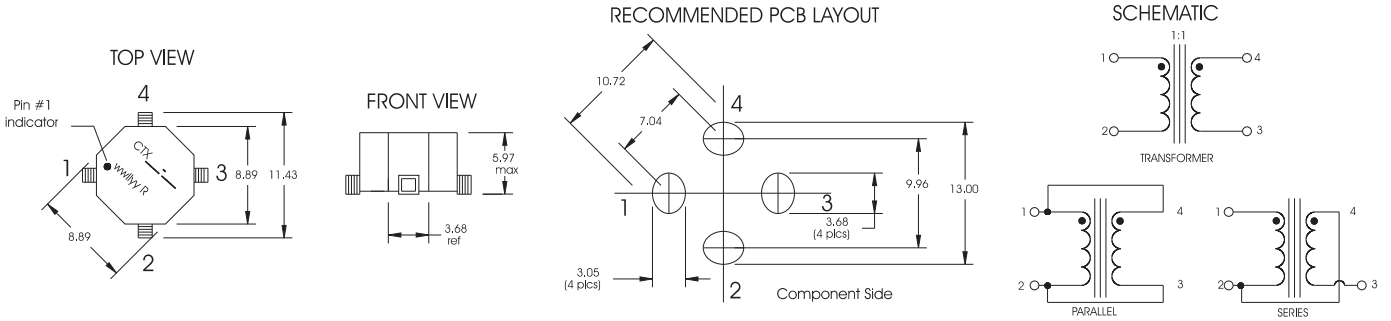

CTX 3, 3P, 3A Series

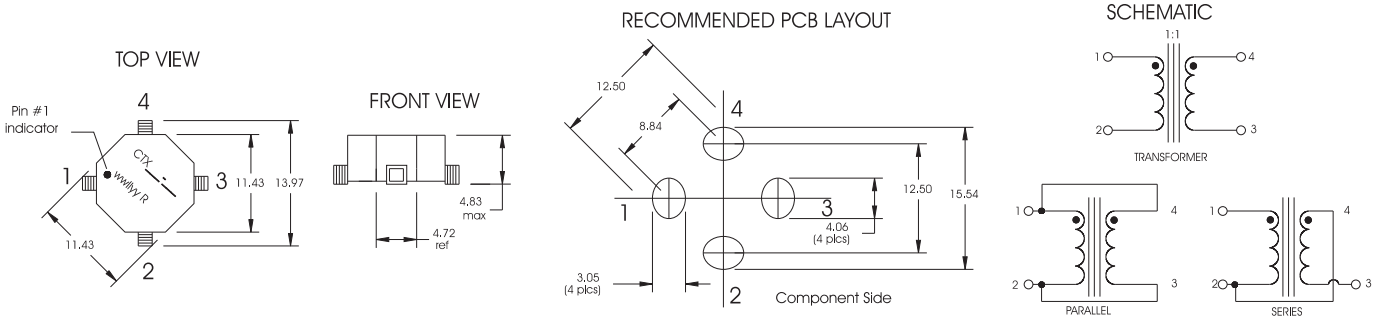

CTX 4, 4P, 4A Series

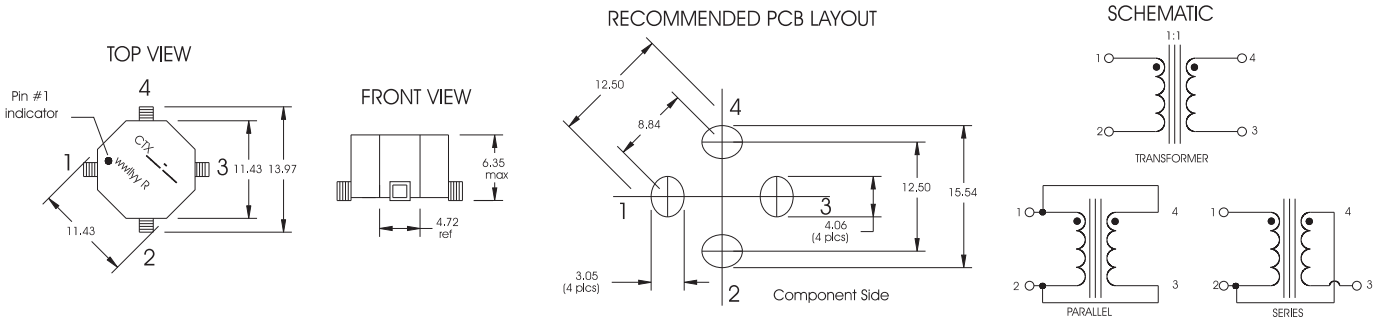

Dimensions in Millimeters.

wwllyy = (date code) R = revision level

Packaging Information

CTX 1, 1P, 1A Series

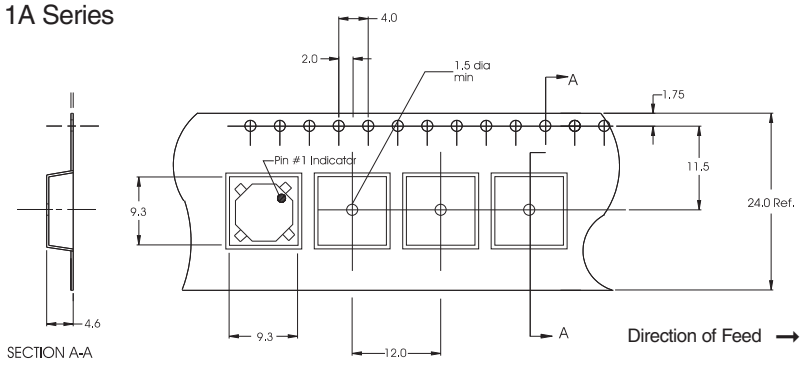

Parts packaged on 13" Diameter reel, 1,100 parts per reel.

CTX 2, 2P, 2A Series

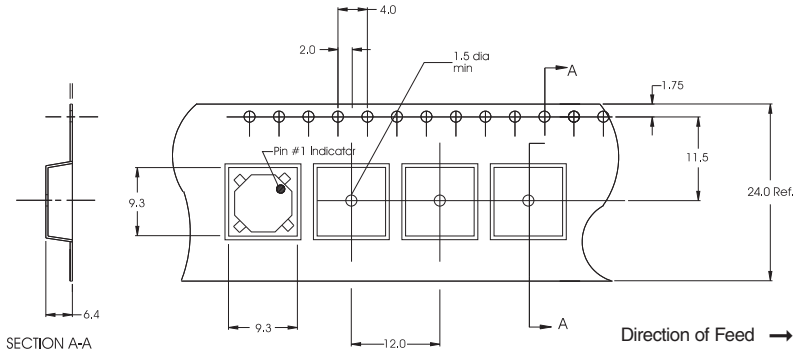

Parts packaged on 13" Diameter reel, 800 parts per reel.

CTX 3, 3P, 3A Series

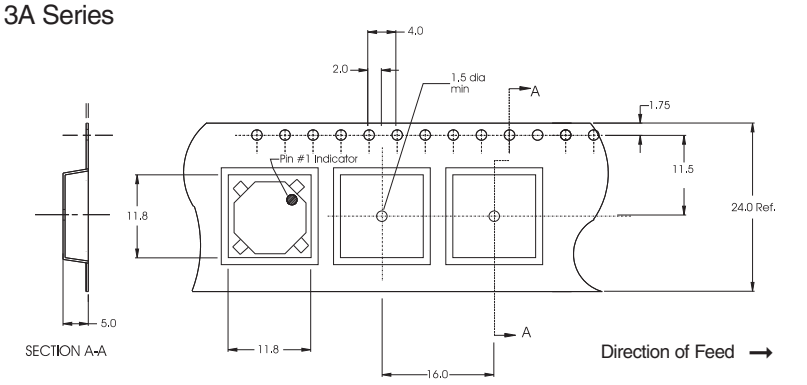

Parts packaged on 13" Diameter reel, 800 parts per reel.

CTX 4, 4P, 4A Series

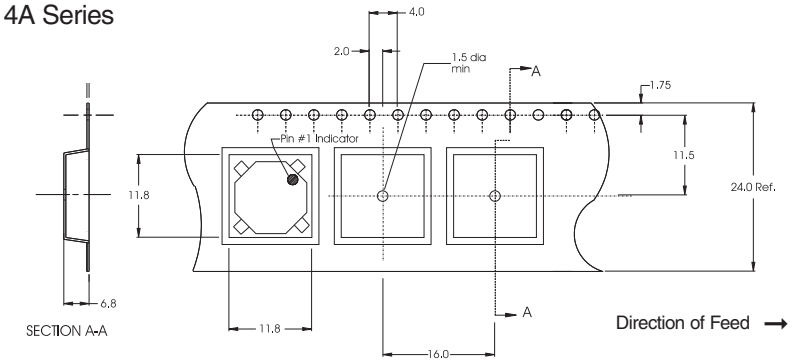

Parts packaged on 13" Diameter reel, 600 parts per reel.

Dimensions are in millimeters.

Performance Characteristics

INDUCTANCE VS. CURRENT

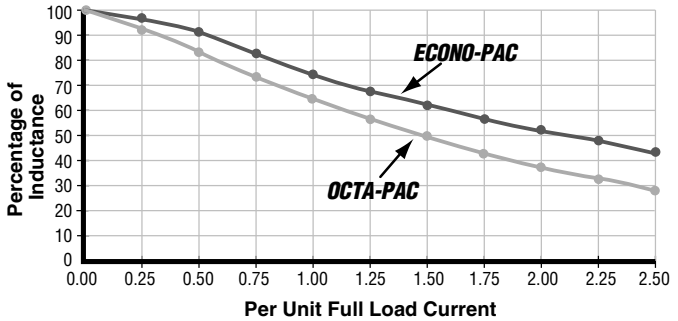

TEMPERATURE RISE VS. RATED CURRENT

Max. Ambient plus Rise = 125°C

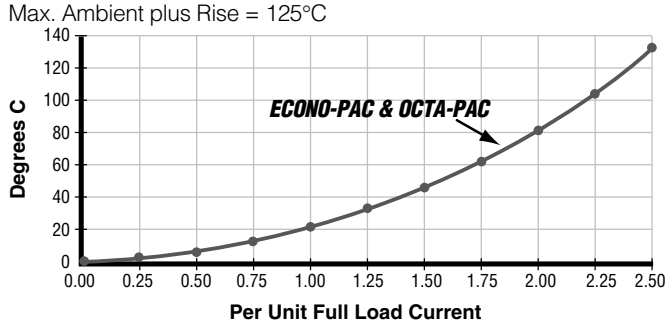

INDUCTANCE VS. TEMPERATURE

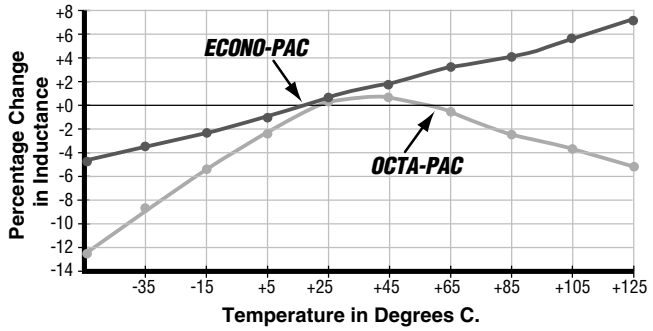

- **INDUCTANCE VS. CURRENT:**
  Inductance will fall off as DC Current is increased.
  (See Inductance vs. Current graph).
- **FREQUENCY RESPONSE:**
  Wide-band frequency response to 1 megaHertz.
- **CURRENT LIMITATION:**
  The maximum allowable currents are defined by the internal "hot-spot" temperatures which are limited to 130°C, including ambient.

OCTA-PAC® PLUS Typical Inductance vs. DC Current

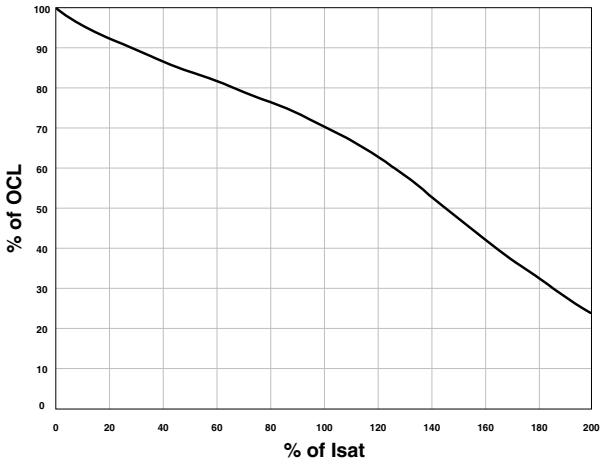

OCTA-PAC® PLUS Winding Loss Derating with Core Loss

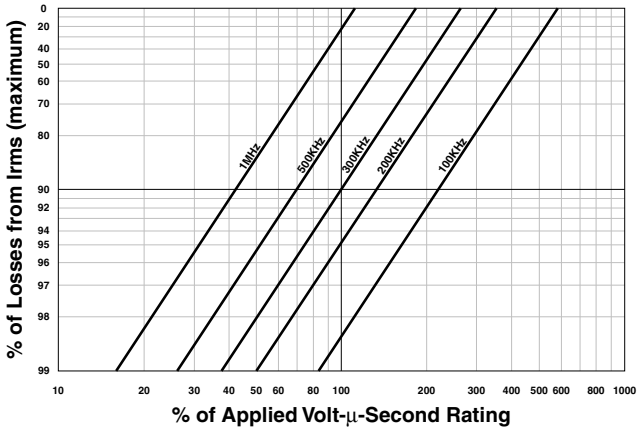

© Cooper Electronic Technologies 2007

Visit us on the Web at www.cooperbussmann.com

1225 Broken Sound Pkwy. Suite F Boca Raton, FL 33487
Tel: +1-561-998-4100 Toll Free: +1-888-414-2645 Fax: +1-561-241-6640

This bulletin is intended to present product design solutions and technical information that will help the end user with design applications. Cooper Electronic Technologies reserves the right, without notice, to change design or construction of any products and to discontinue or limit distribution of any products. Cooper Electronic Technologies also reserves the right to change or update, without notice, any technical information contained in this bulletin. Once a product has been selected, it should be tested by the user in all possible applications.

Life Support Policy: Cooper Electronic Technologies does not authorize the use of any of its products for use in life support devices or systems without the express written approval of an officer of the Company. Life support systems are devices which support or sustain life, and whose failure to perform, when properly used in accordance with instructions for use provided in the labeling, can be reasonably expected to result in significant injury to the user.

Mouser Electronics

Authorized Distributor

Click to View Pricing, Inventory, Delivery & Lifecycle Information:

Cooper Bussmann:

CTX210409TR-R CTX01-16025-R CTX250-4-R CTX16-17769-R CTX16-18405-R CTX06-14620 CTX06-14621 CTX06-14622 CTX82-2-R CTX03-12357-2 CTX03-12744 CTX03-12757 CTX03-14439 CTX03-14856 CTX03-15220 CTX03-15256 CTX03-17905-R CTX04-13770 CTX06-14599 CTX08-14225 CTX08-14729 CTX10-4-L CTX10-4A-L CTX100-4-L CTX110092-2 CTX110654-R CTX13-14602 CTX14-14749 CTX14-15150 CTX14-15151 CTX16-15218 CTX16-16364 CTX16-16365 CTX16-16366 CTX16-17360 CTX16-17413-R CTX16-18294-R CTX17-17640-R CTX210518-R CTX25-5-52-R CTX28-17489-R CTX33-17526-R CTX33-17678-R CTX33-17688-R CTX33-17807-R CTX33-18395-R CTX33-18428-R CTX33-4A-L CTX50-4-L CTX100-5-R CTX110602-R CTX210602-R CTX47-5-R CTX68-5P-R CTX210659TR-R CTX110651-R CTX16-18833-R