19-4998; Rev 0; 10/09

Low-Current I²C RTCs for High-ESR Crystals

DS1341/DS1342

General Description

The DS1341/DS1342 low-current real-time clocks (RTCs) are timekeeping devices that provide an extremely low standby current, which permits longer life from a power supply. The DS1341/DS1342 support high-ESR crystals, which broaden the pool of usable crystals for the devices. The DS1341 uses a 6pF crystal, while the DS1342 uses a 12.5pF crystal. These devices are accessed through an I²C serial interface. Other features include two time-of-day alarms, two interrupt outputs, a programmable square-wave output, and a serial bus timeout mechanism.

The clock/calendar provides seconds, minutes, hours, day, date, month, and year information. The date at the end of the month is automatically adjusted for months with fewer than 31 days, including corrections for leap year. The clock operates in either 24hr or 12hr format with an AM/PM indicator.

The DS1341/DS1342 also include an input for synchronization. When a reference clock (e.g., 60Hz power line or GPS 1PPS) is present at the CLKIN pin and the enable external clock input bit (ECLK) is set to 1, the DS1341/DS1342 RTCs are frequency-locked to the external clock and the clock accuracy is determined by the external source. In case of external clock failure, the clock is switched to the crystal oscillator.

The devices are available in a lead(Pb)-free/RoHS-compliant, 8-pin µSOP package. The devices support a -40°C to +85°C extended temperature range.

Applications

Medical	Portable Instruments
Point of Sale (POS)	Portable Audio
Telematics	Automotive

Features

- **Low Timekeeping Current of 250nA (typ)**
- **Compatible with Crystal ESR Up to 80kΩ**
- **Use Crystals with C_L = 6pF (DS1341) or C_L = 12.5pF (DS1342)**
- **+1.8V to +5.5V Operating Voltage Range**
- **Maintain Time Down to +1.15V (typ)**
- **Fast (400kHz) I²C Interface**
- **Bus Timeout for Lockup-Free Operation**
- **RTC Counts Seconds, Minutes, Hours, Day, Date, Month, and Year with Leap Year Compensation Valid Through 2099**
- **External Clock Source for Synchronization Clock Reference (e.g., 32kHz, 50Hz/60Hz Power Line, GPS 1PPS)**
- **Two Time-of-Day Alarms with Two Interrupt Outputs**
- **Programmable Square-Wave Output**
- **Industrial Temperature Range**
- **Small, 8-Pin µSOP Package**

Ordering Information

PART	TEMP RANGE	PIN-PACKAGE	OSC C_L (pF)
DS1341U+	-40°C to +85°C	8 µSOP	6
DS1341U+T&R	-40°C to +85°C	8 µSOP	6
DS1342U+*	-40°C to +85°C	8 µSOP	12.5
DS1342U+T&R*	-40°C to +85°C	8 µSOP	12.5

+Denotes a lead(Pb)-free/RoHS-compliant package.
T&R = Tape and reel.
**Future product—contact factory for availability.*

Typical Operating Circuit

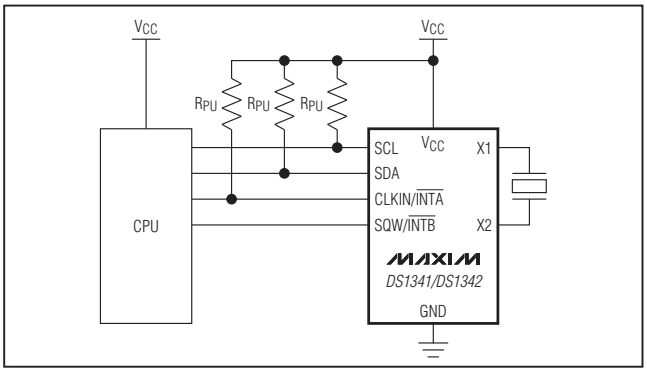

Pin Configuration

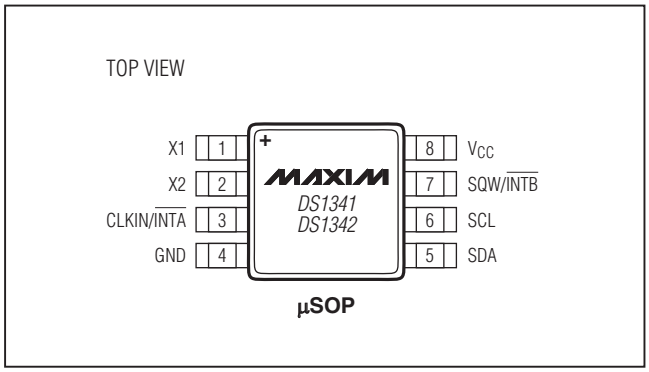

For pricing, delivery, and ordering information, please contact Maxim Direct at 1-888-629-4642, or visit Maxim's website at www.maxim-ic.com.

Downloaded from Elcodis.com electronic components distributor

ABSOLUTE MAXIMUM RATINGS

Voltage Range on Any Pin Relative to Ground....-0.3V to +6.0V
Operating Temperature Range..... -40°C to +85°C
Junction-to-Ambient Thermal
Resistance (θ_{JA}) (Note 1) ..... +221°C/W
Junction-to-Case Thermal
Resistance (θ_{JC}) (Note 1) ..... +39°C/W

Junction Temperature Maximum.....+150°C
Storage Temperature Range..... -55°C to +125°C
Soldering Temperature .....Refer to the IPC/JEDEC J-STD-020 Specification.

Note 1: Package thermal resistances were obtained using the method described in JEDEC specification JESD51-7, using a four-layer board. For detailed information on package thermal considerations, refer to **www.maxim-ic.com/thermal-tutorial**.

Stresses beyond those listed under "Absolute Maximum Ratings" may cause permanent damage to the device. These are stress ratings only, and functional operation of the device at these or any other conditions beyond those indicated in the operational sections of the specifications is not implied. Exposure to absolute maximum rating conditions for extended periods may affect device reliability.

DC ELECTRICAL CHARACTERISTICS

(V_{CC} = +1.8V to +5.5V, T_A = -40°C to +85°C, unless otherwise noted.) (Note 2)

PARAMETER	SYMBOL	CONDITIONS	MIN	TYP	MAX	UNITS
Operating Voltage Range	V_{CC}	Full operation (Note 3)	1.8		5.5	V
	V_{CCT}	Timekeeping (Notes 3, 4)	1.3		5.5	
Minimum Timekeeping Voltage	V_{CCTMIN}	T_A = +25°C (Notes 3, 4)		1.15	1.3	V
Timekeeping Current: DS1341 CLKIN = GND or CLKIN = V_{CC} (Note 4)	I_{CCT}	V_{CC} = +3.0V, EGFIL = 0, DOSF = 1		220	500	nA
		V_{CC} = +5.5V		250	600	
		V_{CC} = +3.0V, EGFIL = 1, DOSF = 0		280	560	
		V_{CC} = +5.5V		320	700	
Logic 1 Input	V_{IH}	(Note 2)	0.7 x V_{CC}		V_{CC} + 0.3	V
Logic 0 Input	V_{IL}	(Note 2)	-0.3		0.3 x V_{CC}	V
Input Leakage (SCL, CLKIN/$\overline{INTA}$)	I_{LI}	ECLK = 1, V_{IN} = 0V to V_{CC}	-0.1		+0.1	µA
Output Leakage (CLKIN/$\overline{INTA}$, SQW/$\overline{INTB}$)	I_O	ECLK = A1IE = A2IE = 0	-1.0		+1.0	µA
Output Logic 1 V_{OH} = +1.0V (SQW /$\overline{INTB}$)	I_{OH}	$V_{CC} \geq$ 1.8V, INTCN = 0	-3.0			mA
		$V_{CC} \geq$ 1.3V, INTCN = 0	-250			µA
Output Logic 0 V_{OL} = +0.4V (SDA, CLKIN/$\overline{INTA}$, SQW/$\overline{INTB}$)	I_{OL}	$V_{CC} \geq$ 1.8V	3.0			mA
		$V_{CC} \geq$ 1.3V (Note 5)	250			µA

Downloaded from Elcodis.com electronic components distributor

AC ELECTRICAL CHARACTERISTICS

(V_{CC} = +1.8V to +5.5V, T_A = -40°C to +85°C, unless otherwise noted.) (Note 2, Figure 1)

PARAMETER	SYMBOL	CONDITIONS	MIN	TYP	MAX	UNITS
SCL Clock Frequency	f_{SCL}	(Note 6)			400	kHz
Bus Free Time Between a STOP and START Condition	t_{BUF}		1.3			µs
Hold Time (Repeated) START Condition	$t_{HD:STA}$	(Note 7)	0.6			µs
Low Period of SCL Clock	t_{LOW}		1.3			µs
High Period of SCL Clock	t_{HIGH}		0.6			µs
Data Hold Time	$t_{HD:DAT}$	(Notes 8, 9)	0		0.9	µs
Data Setup Time	$t_{SU:DAT}$	(Note 10)	100			ns
Setup Time for a Repeated START Condition	$t_{SU:STA}$		0.6			µs
Rise Time of Both SDA and SCL Signals	t_R	(Note 11)	20 + 0.1C_B		300	ns
Fall Time for Both SDA and SCL Signals	t_F	(Note 11)	20 + 0.1C_B		300	ns
Setup Time for STOP Condition	$t_{SU:STO}$		0.6			µs
Capacitive Load for Each Bus Line	C_B	(Note 11)			400	pF
I/O Capacitance	$C_{I/O}$			10		pF
SCL Spike Suppression	t_{SP}			30		ns
Oscillator Stop Flag (OSF) Delay	t_{OSF}	(Note 12)		25	100	ms
Timeout Interval	$t_{TIMEOUT}$	(Note 13)	25		35	ms

CRYSTAL PARAMETERS

PARAMETER	SYMBOL	CONDITIONS	MIN	TYP	MAX	UNITS
Nominal Frequency	f_O			32.768		kHz
Series Resistance	ESR			35	80	kΩ
Load Capacitance	C_L	DS1341		6		pF
		DS1342		12.5		

Note 2: Limits at -40°C are guaranteed by design and not production tested.
Note 3: Voltage referenced to ground.
Note 4: Specified with I2C bus inactive. Oscillator operational, INTCN = 1, ECLK = 0.
Note 5: Applies to CLKIN/$\overline{INTA}$ and SQW/$\overline{INTB}$ only.
Note 6: The minimum SCL clock frequency is limited by the bus timeout feature, which resets the serial bus interface if SCL is held low for $t_{TIMEOUT}$.
Note 7: After this period, the first clock pulse is generated.
Note 8: A device must internally provide a hold time of at least 300ns for the SDA signal (referred to the V_{IHMIN} of the SCL signal) to bridge the undefined region of the falling edge of SCL.
Note 9: The maximum $t_{HD:DAT}$ need only be met if the device does not stretch the low period (t_{LOW}) of the SCL signal.
Note 10: A fast-mode device can be used in a standard-mode system, but the requirement $t_{SU:DAT} \geq$ to 250ns must then be met. This is automatically the case if the device does not stretch the low period of the SCL signal. If such a device does stretch the low period of the SCL signal, it must output the next data bit to the SDA line $t_{RMAX} + t_{SU:DAT}$ = 1000 + 250 = 1250ns before the SCL line is released.

Downloaded from Elcodis.com electronic components distributor

Note 11: C_B is the total capacitance of one bus line, including all connected devices, in pF.

Note 12: The parameter t_{OSF} is the period of time the oscillator must be stopped for the OSF flag to be set over the voltage range of $2.4V \leq V_{CC} \leq V_{CCMAX}$.

Note 13: The DS1341/DS1342 can detect any single SCL clock held low longer than $t_{TIMEOUTMIN}$. The devices' I2C interface is in reset state and can receive a new START condition when SCL is held low for at least $t_{TIMEOUTMAX}$. Once the device detects this condition, the SDA output is released. The oscillator must be running for this function to work.

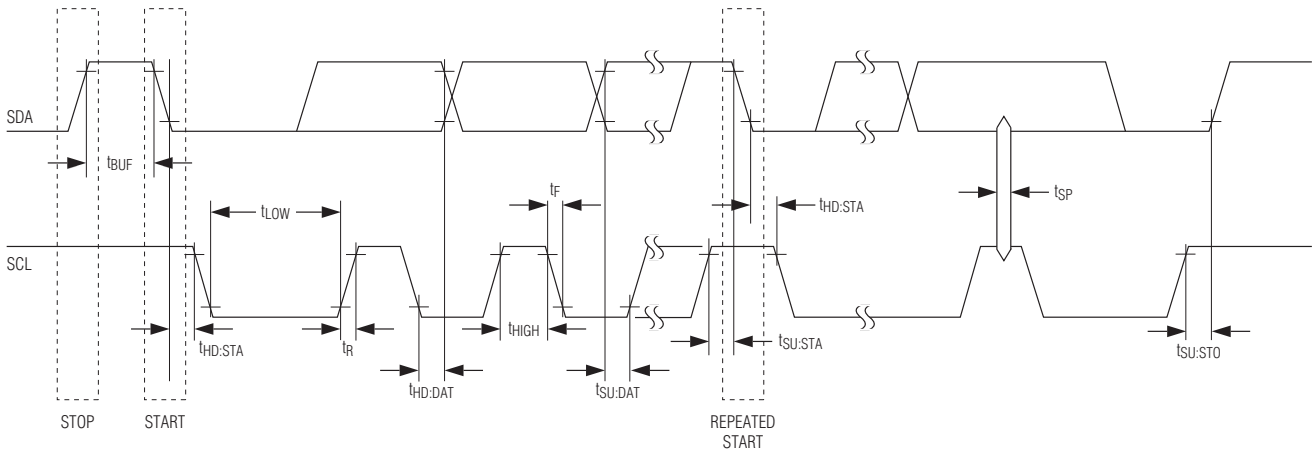

NOTE: TIMING IS REFERENCED TO V_{ILMAX} AND V_{IHMIN}.

Figure 1. Data Transfer on I2C Serial Bus

Downloaded from Elcodis.com electronic components distributor

Functional Diagram

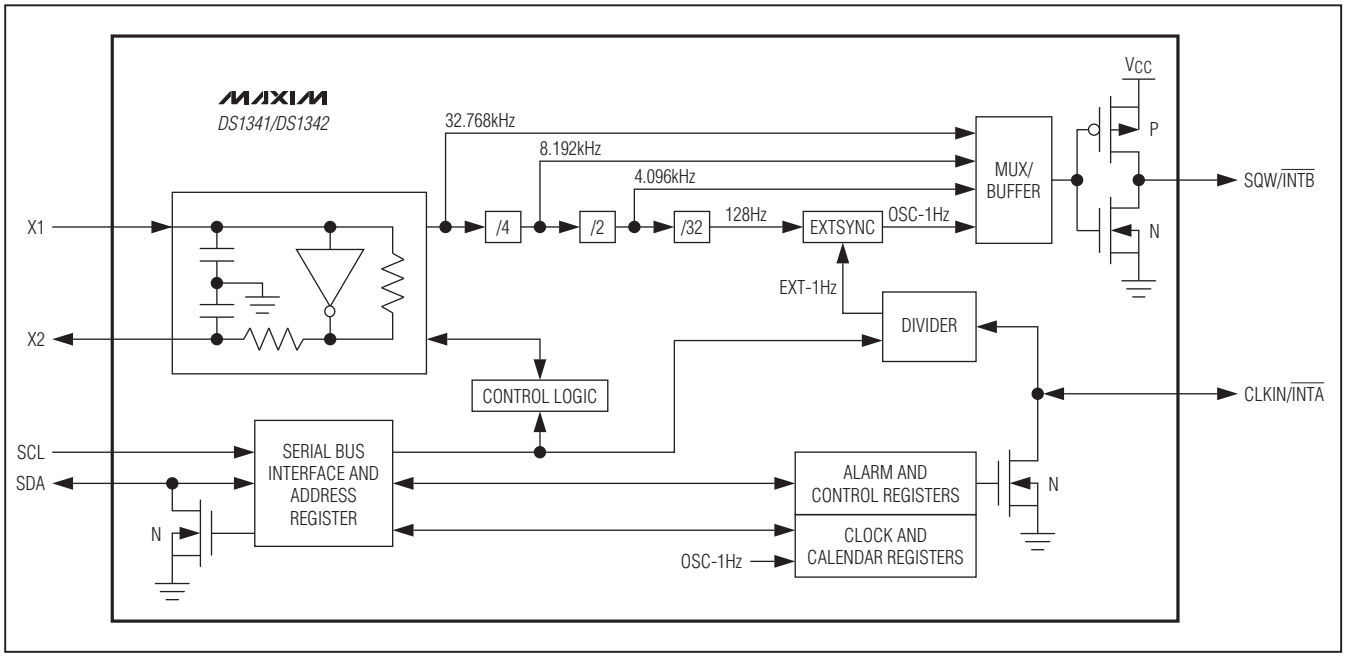

Pin Description

PIN	NAME	FUNCTION
1	X1	Connections for a Standard 32.768kHz Quartz Crystal. The internal oscillator circuitry is designed for operation with a crystal having a specified load capacitance (C_L) of 6pF (DS1341) or 12.5pF (DS1342).
2	X2	
3	CLKIN/$\overline{\text{INTA}}$	Clock Input/Active-Low Interrupt Output. This I/O pin is used to output an alarm interrupt or accept an external clock input to drive the RTC counter. In the output mode, this is an open drain and requires an external pullup resistor. If not used, connect this pin to ground.
4	GND	Ground
5	SDA	Serial-Data Input/Output. SDA is the input/output pin for the I2C serial interface. The SDA pin is open drain and requires an external pullup resistor.
6	SCL	Serial-Clock Input. SCL is used to synchronize data movement on the serial interface.
7	SQW/$\overline{\text{INTB}}$	Square-Wave/Active-Low Interrupt Output. This pin is used to output a programmable square wave or an alarm interrupt signal. This is a CMOS push-pull output and does not require an external pullup resistor. If not used, this pin can be left unconnected.
8	V_{CC}	DC Power Input. This pin should be decoupled using a 0.01µF or 0.1µF capacitor.

Downloaded from Elcodis.com electronic components distributor

Low-Current I²C RTCs for High-ESR Crystals

Detailed Description

The DS1341/DS1342 low-current RTCs are timekeeping devices that consume an extremely low timekeeping current, which permits longer life from a power supply. The clock/calendar provides seconds, minutes, hours, day, date, month, and year information. The date at the end of the month is automatically adjusted for months with fewer than 31 days, including corrections for leap year through 2099. The clock operates in either a 24hr or 12hr format with an AM/PM indicator.

The DS1341/DS1342 use an external 32.768kHz crystal. The oscillator circuit does not require any external resistors or capacitors to operate. The devices support a high-ESR crystal, which broadens the pool of usable crystals for the device. The DS1342 uses a 12.5pF crystal. The DS1341 uses a 6pF crystal, which decreases oscillator current draw, but is less commonly available than the 12.5pF crystals.

The DS1341/DS1342 also accept an external clock reference for synchronization. The external clock can be a 32.768kHz, 50Hz, 60Hz, or 1Hz source. When the enable oscillator bit ($\overline{EOSC}$) is a 0, the DS1341/DS1342 use the oscillator for timekeeping. If the enable external clock input bit (ECLK) is set to 1, the time base derived from the oscillator is compared to the 1Hz signal that is derived from the CLKIN signal. The conditioned signal drives the RTC time and date counters. If the oscillator is disabled and the CLKIN signal is absent, the time and date values remain static, provided that V_{CC} remains at a valid level.

When the external clock is lost or when the frequency differs more than ±0.8% from the crystal frequency, the signal derived from the crystal oscillator drives the RTC counter.

When ECLK is set to 0, the RTC counter is always driven with the signal derived from the crystal oscillator. When the $\overline{EOSC}$ bit is a 1 and the external clock source is selected, the RTC counter is always clocked by the signal from the CLKIN pin.

Address and data are transferred serially through an I²C serial interface. Other features include two time-of-day alarms, two interrupts, a programmable square-wave output, and a bus timeout mechanism that resets the I²C bus if it remains inactive for a minimum of $t_{TIMEOUT}$.

The DS1341/DS1342 are available in a lead(Pb)-free/RoHS-compliant, 8-pin µSOP package. Both devices support a -40°C to +85°C extended temperature range.

Oscillator Circuit

The DS1341/DS1342 use an external 32.768kHz crystal. The oscillator circuit does not require any external resistors or capacitors to operate. The DS1341 includes integrated capacitive loading for a 6pF C_L crystal, and the DS1342 includes integrated capacitive loading for a 12.5pF C_L crystal. See the *Crystal Parameters* table for the external crystal parameters. The *Functional Diagram* shows a simplified schematic of the oscillator circuit. The startup time is usually less than 1 second when using a crystal with the specified characteristics.

Clock Accuracy

When running from the internal oscillator, the accuracy of the clock is dependent upon the accuracy of the crystal and the accuracy of the match between the capacitive load of the oscillator circuit and the capacitive load for which the crystal was trimmed. Additional error is added by crystal frequency drift caused by temperature shifts. External circuit noise coupled into the oscillator circuit can result in the clock running fast. Figure 2 shows a typical PCB layout for isolation of the crystal and oscillator from noise. Refer to Application Note 58: *Crystal Considerations with Dallas Real-Time Clocks* for detailed information.

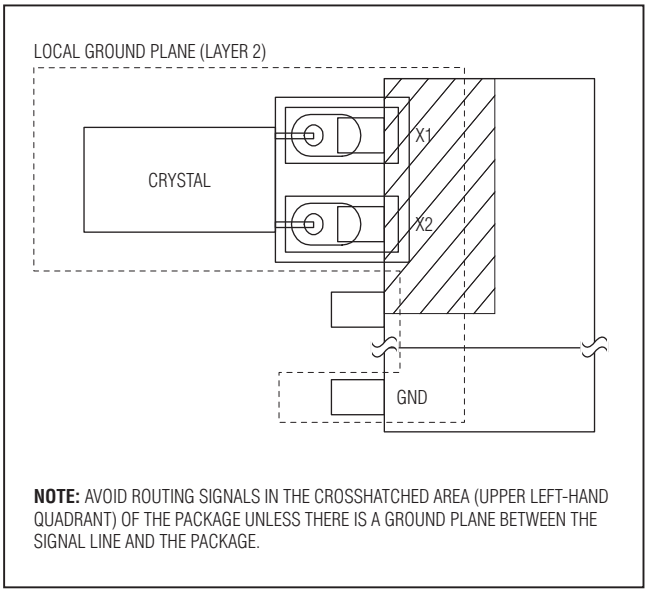

Figure 2. Layout Example

Downloaded from Elcodis.com electronic components distributor

External Synchronization

When an external clock reference is used, the input from CLKIN/$\overline{\text{INTA}}$ is divided down to 1Hz by the divisor selected by the CLKSEL[2:1] bits. The 1Hz from the divider (Ext-1Hz, see the *Functional Diagram*) is used to correct the 1Hz that is derived from the 32.768kHz oscillator (Osc-1Hz). As Osc-1Hz drifts in relation to Ext-1Hz, Osc-1Hz is digitally adjusted.

As shown in the *Functional Diagram*, the three highest frequencies driving the SQW/$\overline{\text{INTB}}$ pin are derived from the uncorrected oscillator, while the 1Hz output is derived from the adjusted Osc-1Hz signal.

Conceptually, the circuit can be thought of as two 1Hz signals, one derived from the internal oscillator and the other derived from the external reference clock, with the oscillator-derived 1Hz signal being locked to the 1Hz signal derived from the external reference clock. The edges of the 1Hz signals do not need to be aligned with each other. While the external clock source is present and within tolerance, the Ext-1Hz and Osc-1Hz maintain their existing lock, regardless of their edge alignment, with periodic correction of the Osc-1Hz signal. If the external signal is lost and then regained sometime later, the signals relock with whatever new alignment exists (see Figure 3).

The Ext-1Hz is used by the device as long as it is within tolerance, which is about 0.8% of Osc-1Hz. While Ext-1Hz is within tolerance, the skew between the two signals could shift until a change of approximately 7.8ms accumulates, after which the Osc-1Hz signal is adjusted (see Figure 4). The adjustment is accomplished by digitally adjusting the 32kHz oscillator divider chain.

If the difference between Ext-1Hz and Osc-1Hz is greater than approximately 0.8%, Osc-1Hz runs unadjusted (see Figure 3) and the loss of signal (LOS) is set, provided the ECLK bit is set.

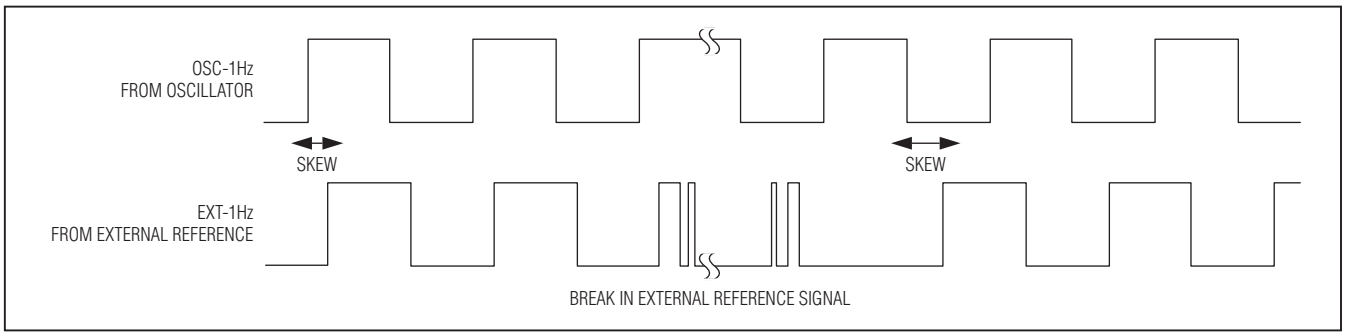

Figure 3. Loss and Reacquisition of External Reference Clock

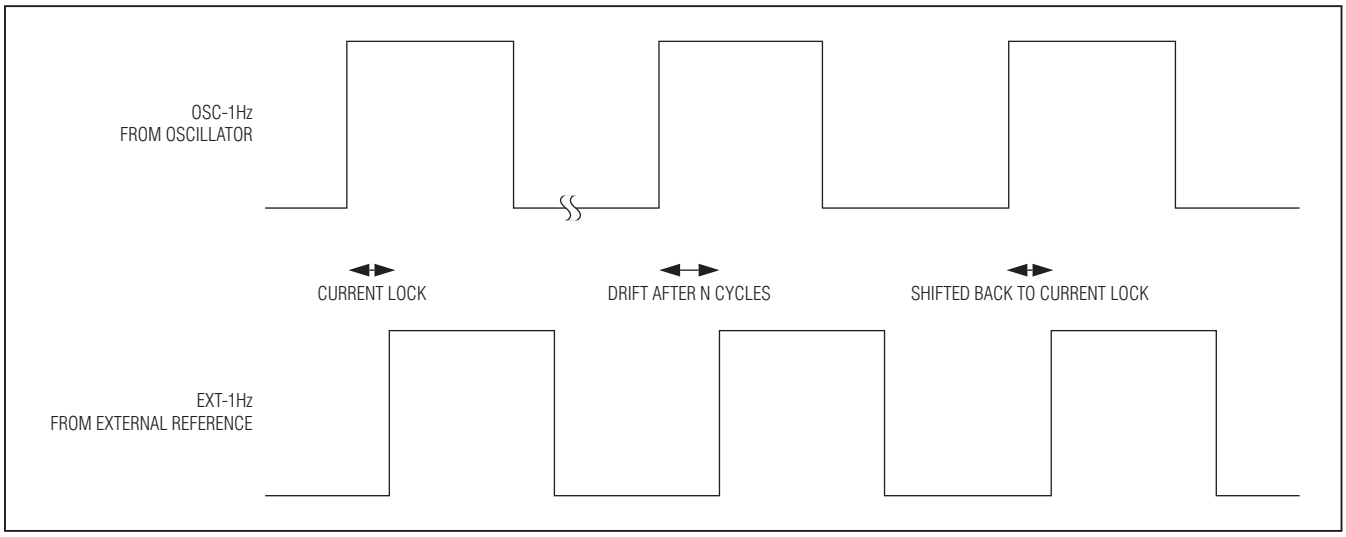

Figure 4. Drift and Adjustment of Internal 1Hz to External Reference Clock

Downloaded from Elcodis.com electronic components distributor

Low-Current I²C RTCs for High-ESR Crystals

Register Map

Table 1 shows the map for the DS1341/DS1342 registers. During a multibyte access, if the address pointer reaches the end of the register space (0Fh), it wraps around to location 00h. On either an I²C START or address pointer incrementing to location 00h, the current time is transferred to a second set of registers. The time information is read from these secondary registers while the clock continues to run. This eliminates the need to reread the registers in case the main registers update during a read.

I²C Interface

The I²C interface is guaranteed to operate when V_{CC} is between 1.8V and 5.5V and the $\overline{EOSC}$ bit is 0. The I²C interface is accessible whenever V_{CC} is at a valid level. To prevent invalid device operation, the I²C interface should not be accessed when V_{CC} is below +1.8V.

If a microcontroller connected to the DS1341/DS1342 resets during I²C communications, it is possible that the microcontroller and the DS1341/DS1342 could become unsynchronized. When the microcontroller resets, the DS1341/DS1342 I²C interface can be placed into a

Table 1. Register Map

ADDRESS	BIT 7	BIT 6	BIT 5	BIT 4	BIT 3	BIT 2	BIT 1	BIT 0	FUNCTION	RANGE
00h	0	10 Seconds			Seconds				Seconds	00–59
01h	0	10 Minutes			Minutes				Minutes	00–59
02h	0	12/$\overline{24}$	$\overline{AM}$/PM 10hr	10hr	Hour				Hours	1–12+$\overline{AM}$/PM 00–23
03h	0	0	0	0	0	Day			Day	1–7
04h	0	0	10 Date		Date				Date	01–31
05h	CENT	0	0	10 MO	Month				Month/ Century	01–12 + Century
06h	10 Year				Year				Year	00–99
07h	A1M1	10 Seconds			Seconds				Alarm 1 Seconds	00–59
08h	A1M2	10 Minutes			Minutes				Alarm 1 Minutes	00–59
09h	A1M3	12/$\overline{24}$	$\overline{AM}$/PM 10hr	10hr	Hour				Alarm 1 Hours	1–12 + $\overline{AM}$/PM 00–23
0Ah	A1M4	DY/$\overline{DT}$	10 Date		Day, Date				Alarm 1 Day, Alarm 1 Date	1–7 1–31
0Bh	A2M2	10 Minutes			Minutes				Alarm 2 Minutes	00–59
0Ch	A2M3	12/$\overline{24}$	$\overline{AM}$/PM 10hr	10hr	Hour				Alarm 2 Hours	1–12 + $\overline{AM}$/PM 00–23
0Dh	A2M4	DY/$\overline{DT}$	10 Date		Day, Date				Alarm 2 Day, Alarm 2 Date	1–7 1–31
0Eh	$\overline{EOSC}$	0	EGFIL	RS2	RS1	INTCN	A2IE	A1IE	Control	—
0Fh	OSF	DOSF	LOS	CLKSEL2	CLKSEL1	ECLK	A2F	A1F	Control/ Status	—

Note: *Bits listed as 0 always read back as 0 and cannot be written to a 1.*

Downloaded from Elcodis.com electronic components distributor

known state by holding SCL low for $t_{TIMEOUT}$. Doing so limits the minimum frequency at which the I²C interface can be operated. If data is being written to the device when the interface timeout is exceeded, prior to the acknowledge, the incomplete byte of data is not written.

Clock and Calendar (00h–06h)

The time and calendar information is obtained by reading the appropriate register bytes. The RTC registers are illustrated in Table 1. The time and calendar are set or initialized by writing the appropriate register bytes. The contents of the time and calendar registers are in the binary-coded decimal (BCD) format. The Day register increments at midnight and rolls over from 7 to 1. Values that correspond to the day-of-week are user-defined but must be sequential (i.e., if 1 equals Sunday, then 2 equals Monday, and so on). The CENT bit in the Month register toggles when the Years register rolls over from 99 to 00. Illogical time and date entries result in an undefined operation.

The DS1341/DS1342 can be run in either 12hr or 24hr mode. Bit 6 of the Hours register is defined as the 12hr or 24hr mode select bit. When high, the 12hr mode is selected. In the 12hr mode, bit 5 is the $\overline{AM}$/PM bit, with a content of 1 being PM. In the 24hr mode, bit 5 is the second bit of the 10hr field. The century bit (bit 7 of the Month register) is toggled when the Years register increments from 99 to 00. On a power-on reset (POR), the time and date are set to 00:00:00 00/01/01 and the Day register is set to 01.

Alarms (07h–0Dh)

The DS1341/DS1342 contain two time-of-day/date alarms. Alarm 1 can be set by writing to registers 07h–0Ah. Alarm 2 can be set by writing to registers 0Bh–0Dh. The alarms can be programmed to activate the CLKIN/$\overline{INTA}$ or SQW/$\overline{INTB}$ outputs (see Table 5) on an alarm match condition. Bit 7 of each of the time of day/date alarm registers are mask bits. When all the mask bits for each alarm are 0, an alarm only occurs when the values in the timekeeping registers 00h–06h match the values stored in the time of day/date alarm registers. The alarms can also be programmed to repeat every second, minute, hour, day, or date. Tables 2 and 3 show the possible alarm settings. Configurations not listed in the tables result in illogical operation. POR values are undefined.

The DY/$\overline{DT}$ bits (bit 6 of the alarm day/date registers) control whether the alarm value stored in bits 0 to 5 of that register reflects the day of the week or the date of the month. If DY/$\overline{DT}$ is written to 0, the alarm is the result

Table 2. Alarm 1 Mask Bits

DY/$\overline{DT}$	ALARM 1 MASK BITS (BIT 7)				ALARM RATE
	A1M4	A1M3	A1M2	A1M1	
X	1	1	1	1	Alarm once per second.
X	1	1	1	0	Alarm when seconds match.
X	1	1	0	0	Alarm when minutes and seconds match.
X	1	0	0	0	Alarm when hours, minutes, and seconds match.
0	0	0	0	0	Alarm when date, hours, minutes, and seconds match.
1	0	0	0	0	Alarm when day, hours, minutes, and seconds match.

X = Don't care.

Table 3. Alarm 2 Mask Bits

DY/$\overline{DT}$	ALARM 2 MASK BITS (BIT 7)			ALARM RATE
	A2M4	A2M3	A2M2	
X	1	1	1	Alarm once per minute (00 second of every minute).
X	1	1	0	Alarm when minutes match.
X	1	0	0	Alarm when hours and minutes match.
0	0	0	0	Alarm when date, hours, and minutes match.
1	0	0	0	Alarm when day, hours, and minutes match.

X = Don't care.

Downloaded from Elcodis.com electronic components distributor

of a match with date of the month. If DY/$\overline{DT}$ is written to 1, the alarm is the result of a match with day of the week.

When the RTC register values match alarm register settings, the corresponding alarm flag bit (A1F or A2F) is set to 1 in the Control/Status register. If the corresponding alarm interrupt enable bit (A1IE or A2IE) is also set to 1 in the Control register, the alarm condition activates the output(s) defined by the ECLK and INTCN bits (see Table 5).

Control Register (0Eh)

Bit 7: Enable Oscillator ($\overline{EOSC}$). When the $\overline{EOSC}$ bit is 0, the oscillator is enabled. When this bit is a 1, the oscillator is disabled. This bit is cleared (0) when power is first applied.

Bit 6: No Function

Bit 5: Enable Glitch Filter (EGFIL). When the EGFIL bit is 1, the 5µs glitch filter at the output of the crystal oscillator is enabled. The glitch filter is disabled when this bit is 0. Disabling the glitch filter is useful in reducing power consumption. This bit is cleared (0) when power is first applied.

Bits 4 and 3: Rate Select (RS[2:1]). These bits control the frequency of the square-wave output when the square wave has been enabled. Table 4 shows the square-wave frequencies that can be selected with the RS bits. These bits are both set to 1 (32.768kHz) when power is first applied.

The 32.768kHz oscillator is the source of all square-wave output frequencies. Frequencies above 1Hz are not conditioned by CLKIN. The 1Hz output is the 32.768kHz oscillator frequency, divided down to 1Hz and conditioned by CLKIN, provided that the CLKIN frequency differs by no more than ±0.8% from the crystal frequency. Cycle-to-cycle jitter of the 1Hz square wave can be up to 2ms.

Bit 2: Interrupt Control (INTCN). This bit controls the relationship between the two alarms and the interrupt output pins. When the INTCN bit is 0, a square wave is output on the SQW/$\overline{INTB}$ pin, and the state of the ECLK bit determines the function of the CLKIN/$\overline{INTA}$ pin (see Table 5). When the INTCN bit is 1 and the ECLK bit is a 0, a match between the timekeeping registers and the alarm 1 registers activates the CLKIN/$\overline{INTA}$ pin (provided that the alarm is enabled) and a match between the timekeeping registers and the alarm 2 registers activates the SQW/$\overline{INTB}$ pin (provided that the alarm is enabled). When the INTCN bit is 1 and the ECLK bit is a 1, a match between the timekeeping registers and the alarm 1 registers **or** a match between the timekeeping registers and the alarm 2 registers activates the SQW/$\overline{INTB}$ pin (provided that the alarm is enabled). This bit is cleared (0) when power is first applied.

Bit 1: Alarm 2 Interrupt Enable (A2IE). When the A2IE bit is 0, the alarm 2 interrupt function is disabled. When the A2IE bit is 1, the alarm 2 interrupt function is enabled and is routed to an output, based upon the steering defined by the INTCN and ECLK bits, as noted in Table 5. Regardless of the state of A2IE, a match between the timekeeping registers and the alarm 2 registers (0Bh–0Dh) sets the alarm 2 flag bit (A2F). This bit is cleared (0) when power is first applied.

Bit 0: Alarm 1 Interrupt Enable (A1IE). When the A1IE bit is 0, the alarm 1 interrupt function is disabled. When the A1IE bit is 1, the alarm 1 interrupt function is enabled and is routed to an output, based upon the steering defined by the INTCN and ECLK bits, as noted in Table 5. Regardless of the state of A1IE, a match between the timekeeping registers and the alarm 1 registers (07h–0Ah) sets the alarm 1 flag bit (A1F). This bit is cleared (0) when power is first applied.

Control Register Bitmap (0Eh)

BIT 7	BIT 6	BIT 5	BIT 4	BIT 3	BIT 2	BIT 1	BIT 0
$\overline{EOSC}$	0	EGFIL	RS2	RS1	INTCN	A2IE	A1IE
0	0	0	1	1	0	0	0

Table 4. SQW/$\overline{INTB}$ Output Settings

RS2	RS1	SQW/$\overline{INTB}$
0	0	1Hz
0	1	4.098kHz
1	0	8.192kHz
1	1	32.768kHz

Table 5. Interrupt Output Routing

INTCN	ECLK	CLKIN/$\overline{INTA}$	SQW/$\overline{INTB}$
0	0	A1F + A2F	SQW
0	1	CLKIN Input	SQW
1	0	A1F	A2F
1	1	CLKIN Input	A1F + A2F

Downloaded from Elcodis.com electronic components distributor

Control/Status Register Bitmap (0Fh)

BIT 7	BIT 6	BIT 5	BIT 4	BIT 3	BIT 2	BIT 1	BIT 0
OSF	DOSF	LOS	CLKSEL2	CLKSEL1	ECLK	A2F	A1F
1	0	1	0	0	0	X	X

Control/Status Register (0Fh)

Bit 7: Oscillator Stop Flag (OSF). If the OSF bit is a 1, that indicates the oscillator has stopped or was stopped for some period of time, and could be used to judge the validity of the clock and calendar data. This bit is edge triggered and is set to 1 when the internal circuitry senses the oscillator has transitioned from a normal run state to a STOP condition. The following are examples of conditions that can cause the OSF bit to be set:

1) Power is applied for the first time.
2) The voltage present on V_{CC} is insufficient to support oscillation.
3) The $\overline{EOSC}$ bit is turned off.
4) There are external influences on the crystal (e.g., noise, leakage, etc.).

This bit remains at 1 until written to 0. Attempting to write OSF to 1 leaves the value unchanged.

Bit 6: Disable Oscillator Stop Flag (DOSF). This bit, when set to 1, disables the sensing of the oscillator conditions that would set the OSF bit. OSF remains at 0 regardless of what happens to the oscillator. This bit is cleared (0) when power is first applied. Disabling the oscillator sensing is useful in reducing power consumption.

Bit 5: Loss of Signal (LOS). This status bit indicates the state of the CLKIN pin. The bit is set to 1 when the RTC counter is no longer conditioned by the external clock. This happens when ECLK = 0, or when the clock signal at CLKIN stops toggling, or when the CLKIN frequency differs more than ±0.8% from the selected input frequency. This bit remains at 1 until written to 0. Attempting to write LOS to 1 leaves the value unchanged. Clearing the LOS flag when the CLKIN frequency is invalid inhibits subsequent detections of the input frequency deviation.

Bits 4 and 3: Select Clock Source (CLKSEL[2:1]). These two register bits select the clock source to drive the RTC counter. Table 6 lists the input frequencies that can be selected. Upon power-up, the bits are cleared to 0 and the 1Hz rate is selected.

Table 6. Input Frequency Options

CLKSEL2	CLKSEL1	CLKIN/$\overline{INTA}$
0	0	1Hz Input
0	1	50Hz Input
1	0	60Hz Input
1	1	32.768kHz Input

Bit 2: Enable External Clock Input (ECLK). This bit controls the direction of the CLKIN/$\overline{INTA}$ pin (see Table 5). When the ECLK bit is 1, the CLKIN/$\overline{INTA}$ pin is an input, with the expected input rate defined by the state of CLKSEL2 and CLKSEL1 (see Table 6).

When the ECLK bit is 0, the CLKIN/$\overline{INTA}$ pin is an interrupt output (see Table 5). If the INTCN bit is 0, CLKIN/$\overline{INTA}$ contains the status of A1F (provided that the A1IE bit is 1) or A2F (provided that the A2IE bit is 1). If the INTCN bit is 1, CLKIN/$\overline{INTA}$ contains the status of A1F (provided that the A1IE bit is 1).

This bit is set to 0 when power is first applied.

Bit 1: Alarm 2 Flag (A2F). A 1 in the alarm 2 flag bit indicates that the time matched the alarm 2 registers. This flag can be used to generate an interrupt on either CLKIN/$\overline{INTA}$ or SQW/$\overline{INTB}$ depending on the status of the INTCN bit in the Control register. If the INTCN bit is set to 0 and A2F bit is a 1 (and A2IE bit is also 1), the CLKIN/$\overline{INTA}$ pin goes low. If the INTCN bit is set to 1 and A2F bit is 1 (and A2IE bit is also 1), the SQW/$\overline{INTB}$ pin goes low. The A2F bit is cleared when written to 0. This bit can only be written to 0. Attempting to write this bit to 1 leaves the value unchanged.

Bit 0: Alarm 1 Flag (A1F). A 1 in the alarm 1 flag bit indicates that the time matched the alarm 1 registers. If the A1IE bit is also 1, the CLKIN/$\overline{INTA}$ pin goes low. A1F is cleared when written to 0. This bit can only be written to 0. Attempting to write this bit to 1 leaves the value unchanged.

Downloaded from Elcodis.com electronic components distributor

I2C Serial Port Operation

I2C Slave Address

The DS1341/DS1342s' slave address byte is D0h. The first byte sent to the device includes the device identifier, device address, and the R/$\overline{W}$ bit (Figure 5). The device address sent by the I2C master must match the address assigned to the device.

I2C Definitions

The following terminology is commonly used to describe I2C data transfers.

Master Device: The master device controls the slave devices on the bus. The master device generates SCL clock pulses and START and STOP conditions.

Slave Devices: Slave devices send and receive data at the master's request.

Bus Idle or Not Busy: Time between STOP and START conditions when both SDA and SCL are inactive and in their logic-high states. When the bus is idle, it often initiates a low-power mode for slave devices.

START Condition: A START condition is generated by the master to initiate a new data transfer with a slave. Transitioning SDA from high to low while SCL remains high generates a START condition. See Figure 1 for applicable timing.

STOP Condition: A STOP condition is generated by the master to end a data transfer with a slave. Transitioning SDA from low to high while SCL remains high generates a STOP condition. See Figure 1 for applicable timing.

Repeated START Condition: The master can use a repeated START condition at the end of one data transfer to indicate that it immediately initiates a new data transfer following the current one. Repeated STARTs are commonly used during read operations to identify a specific memory address to begin a data transfer. A repeated START condition is issued identically to a normal START condition. See Figure 1 for applicable timing.

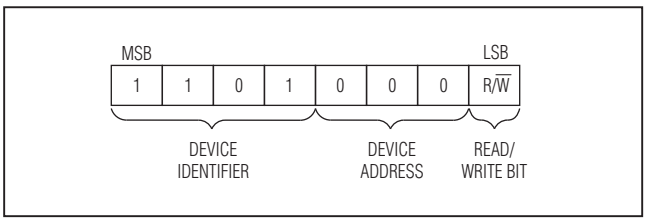

Figure 5. Slave Address Byte

Bit Write: Transitions of SDA must occur during the low state of SCL. The data on SDA must remain valid and unchanged during the entire high pulse of SCL plus the setup and hold time requirements (see Figure 1). Data is shifted into the device during the rising edge of the SCL.

Bit Read: At the end of a write operation, the master must release the SDA bus line for the proper amount of setup time (see Figure 1) before the next rising edge of SCL during a bit read. The device shifts out each bit of data on SDA at the falling edge of the previous SCL pulse and the data bit is valid at the rising edge of the current SCL pulse. Remember that the master generates all SCL clock pulses including when it is reading bits from the slave.

Acknowledge (ACK and NACK): An acknowledge (ACK) or not acknowledge (NACK) is always the ninth bit transmitted during a byte transfer. The device receiving data (the master during a read or the slave during a write operation) performs an ACK by transmitting a 0 during the ninth bit. A device performs a NACK by transmitting a 1 during the ninth bit. Timing for the ACK and NACK is identical to all other bit writes. An ACK is the acknowledgment that the device is properly receiving data. A NACK is used to terminate a read sequence or as an indication that the device is not receiving data.

Byte Write: A byte write consists of 8 bits of information transferred from the master to the slave (most significant bit first) plus a 1-bit acknowledgment from the slave to the master. The 8 bits transmitted by the master are done according to the bit write definition and the acknowledgment is read using the bit read definition.

Byte Read: A byte read is an 8-bit information transfer from the slave to the master plus a 1-bit ACK or NACK from the master to the slave. The 8 bits of information that are transferred (most significant bit first) from the slave to the master are read by the master using the bit read definition, and the master transmits an ACK using the bit write definition to receive additional data bytes. The master must NACK the last byte read to terminate communication so the slave returns control of SDA to the master.

Slave Address Byte: Each slave on the I2C bus responds to a slave address byte sent immediately following a START condition. The slave address byte contains the slave address in the most significant 7 bits and the R/$\overline{W}$ bit in the least significant bit. The

Downloaded from Elcodis.com electronic components distributor

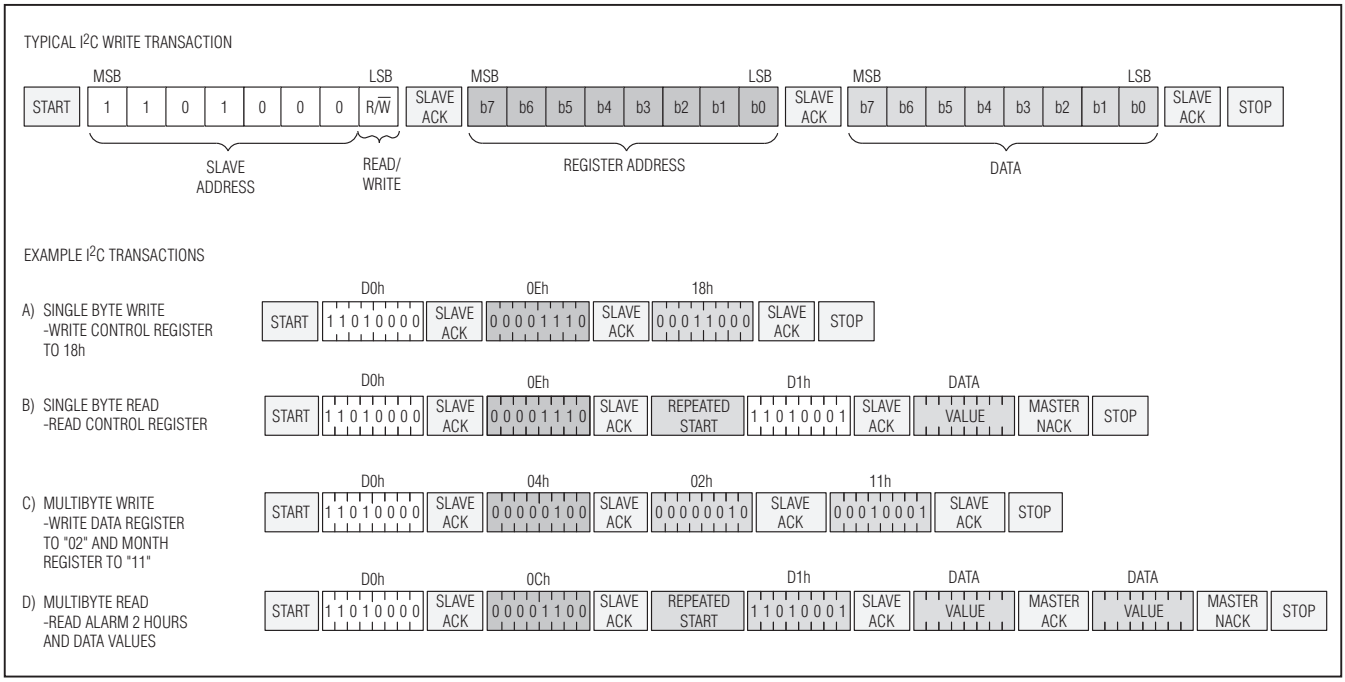

Figure 6. I2C Transactions

DS1341/DS1342s' slave address is D0h and cannot be modified by the user. When the R/$\overline{W}$ bit is 0 (such as in D0h), the master is indicating it writes data to the slave. If R/$\overline{W}$ = 1 (D1h in this case), the master is indicating it wants to read from the slave. If an incorrect slave address is written, the DS1341/DS1342 assume the master is communicating with another I2C device and ignore the communication until the next START condition is sent.

Memory Address: During an I2C write operation, the master must transmit a memory address to identify the memory location where the slave is to store the data. The memory address is always the second byte transmitted during a write operation following the slave address byte.

I2C Communication

See Figure 6 for an I2C communication example.

Writing a Single Byte to a Slave: The master must generate a START condition, write the slave address byte (R/$\overline{W}$ = 0), write the memory address, write the byte of data, and generate a STOP condition. Remember the master must read the slave's acknowledgment during all byte write operations.

Writing Multiple Bytes to a Slave: To write multiple bytes to a slave, the master generates a START condition, writes the slave address byte (R/$\overline{W}$ = 0), writes the starting memory address, writes multiple data bytes, and generates a STOP condition.

Reading a Single Byte from a Slave: Unlike the write operation that uses the specified memory address byte to define where the data is to be written, the read operation occurs at the present value of the memory address counter. To read a single byte from the slave, the master generates a START condition, writes the slave address byte with R/$\overline{W}$ = 1, reads the data byte with a NACK to indicate the end of the transfer, and generates a STOP condition. However, since requiring the master to keep track of the memory address counter is impractical, use the method for manipulating the address counter for reads.

Manipulating the Address Counter for Reads: A dummy write cycle can be used to force the address counter to a particular value. To do this the master generates a START condition, writes the slave address byte (R/$\overline{W}$ = 0), writes the memory address where it desires to read, generates a repeated START condition, writes the slave address byte (R/$\overline{W}$ = 1),

Downloaded from Elcodis.com electronic components distributor

Low-Current I²C RTCs for High-ESR Crystals

reads data with ACK or NACK as applicable, and generates a STOP condition. See Figure 6 for a read example using the repeated START condition to specify the starting memory location.

Reading Multiple Bytes from a Slave: The read operation can be used to read multiple bytes with a single transfer. When reading bytes from the slave, the master simply ACKs the data byte if it desires to read another byte before terminating the transaction. After the master reads the last byte it must NACK to indicate the end of the transfer and then it generates a STOP condition.

Bus Timeout

To avoid an unintended I²C interface timeout, SCL should not be held low longer than $t_{TIMEOUTMIN}$. The I²C interface is in the reset state and can receive a new START condition when SCL is held low for at least $t_{TIMEOUTMAX}$. When the device detects this condition, SDA is released and allowed to be pulled high by the external pullup resistor. For the timeout function to work, the oscillator must be enabled and running.

Applications Information

Power-Supply Decoupling

To achieve the best results when using the DS1341/DS1342, decouple the V_{CC} power supply with a 0.01µF and/or 0.1µF capacitor. Use a high-quality, ceramic, surface-mount capacitor if possible. Surface-mount components minimize lead inductance, which improves performance, and ceramic capacitors tend to have adequate high-frequency response for decoupling applications.

Using Open-Drain Outputs

The CLKIN/$\overline{\text{INTA}}$ output is open drain and, therefore, requires an external pullup resistor to realize a logic-high output level.

SDA and SCL Pullup Resistors

SDA is an open-drain output and requires an external pullup resistor to realize a logic-high level.

Because the DS1341/DS1342 do not use clock cycle stretching, a master using either an open-drain output with a pullup resistor or CMOS output driver (push-pull) could be used for SCL.

Chip Information

SUBSTRATE CONNECTED TO GROUND

Package Information

For the latest package outline information and land patterns, go to **www.maxim-ic.com/packages**. Note that a "+", "#", or "-" in the package code indicates RoHS status only. Package drawings may show a different suffix character, but the drawing pertains to the package regardless of RoHS status.

PACKAGE TYPE	PACKAGE CODE	DOCUMENT NO.
8 µSOP	U8+1	21-0036

Maxim cannot assume responsibility for use of any circuitry other than circuitry entirely embodied in a Maxim product. No circuit patent licenses are implied. Maxim reserves the right to change the circuitry and specifications without notice at any time.

© 2009 Maxim Integrated Products Maxim is a registered trademark of Maxim Integrated Products, Inc.

Downloaded from Elcodis.com electronic components distributor