DSP56301

24-Bit Digital Signal Processor

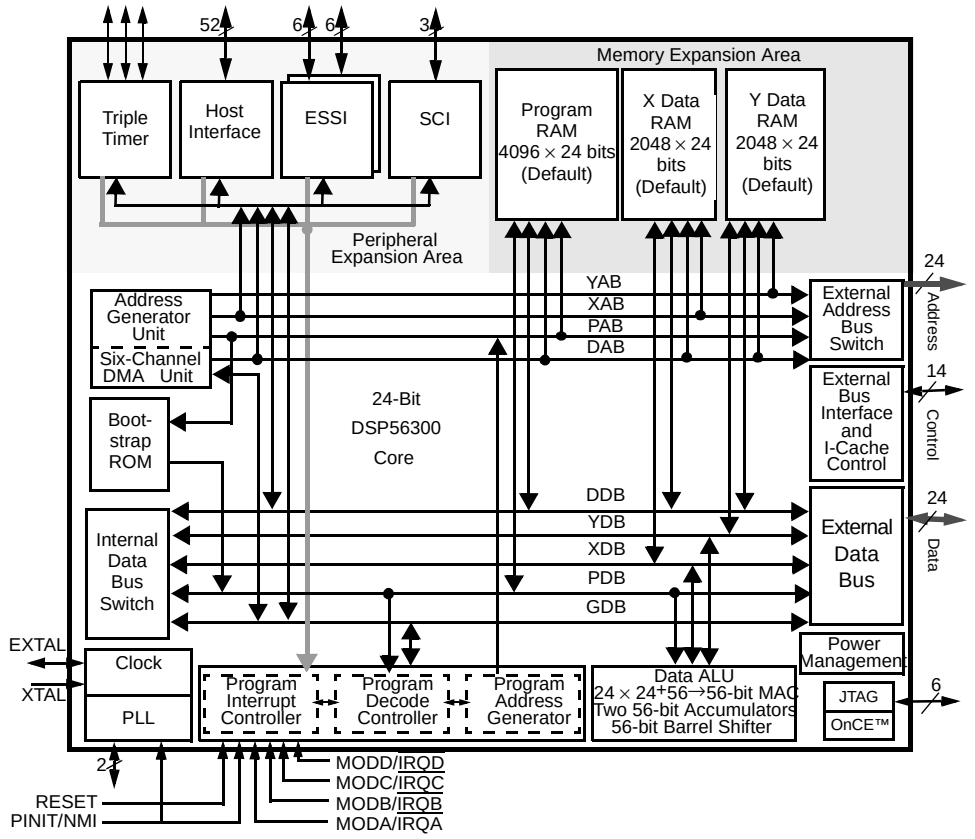

Figure 1. DSP56301 Block Diagram

The DSP56301 is intended for general-purpose digital signal processing, particularly in multimedia and telecommunication applications, such as video conferencing and cellular telephony.

What's New?

Rev. 10 includes the following changes:

- Removes all references to Motorola. No specifications or part numbers were changed.

The DSP56301 is a member of the DSP56300 core family of programmable CMOS Digital Signal Processors (DSPs). This family uses a high-performance, single clock cycle per instruction engine. Significant architectural features of the DSP56300 core family include a barrel shifter, 24-bit addressing, instruction cache, and DMA. The DSP56301 offers 80/100 MIPS using an internal 80/100 MHz clock at 3.0–3.6 volts. The DSP56300 core family offers a rich instruction set and low power dissipation, as well as increasing levels of speed and power, enabling wireless, telecommunications, and multimedia products.

Because of an order from the United States International Trade Commission, BGA-packaged product lines and part numbers indicated here currently are not available from Freescale for import or sale in the United States prior to September 2010: DSP56301

© Freescale Semiconductor, Inc., 1996, 2006. All rights reserved.

Downloaded from Elcodis.com electronic components distributor

Table of Contents

DSP56301 Features iii
Target Applications iv
Product Documentation iv

Chapter 1 Signals/Connections

1.1 Power 1-4
1.2 Ground 1-4
1.3 Clock 1-5
1.4 Phase Lock Loop (PLL) 1-5
1.5 External Memory Expansion Port (Port A) 1-6
1.6 Interrupt and Mode Control 1-9
1.7 Host Interface (HI32) 1-10
1.8 Enhanced Synchronous Serial Interface 0 (ESSI0) 1-16
1.9 Enhanced Synchronous Serial Interface 1 (ESSI1) 1-18
1.10 Serial Communication Interface (SCI) 1-19
1.11 Timers 1-20
1.12 JTAG/OnCE Interface 1-21

Chapter 2 Specifications

2.1 Maximum Ratings 2-1
2.2 Absolute Maximum Ratings 2-2
2.3 Thermal Characteristics 2-2
2.4 DC Electrical Characteristics 2-2
2.5 AC Electrical Characteristics 2-4

Chapter 3 Packaging

3.1 TQFP Package Description 3-2
3.2 TQFP Package Mechanical Drawing 3-11
3.3 MAP-BGA Package Description 3-12
3.4 MAP-BGA Package Mechanical Drawing 3-23

Chapter 4 Design Considerations

4.1 Thermal Design Considerations 4-1
4.2 Electrical Design Considerations 4-2
4.3 Power Consumption Considerations 4-3
4.4 PLL Performance Issues 4-4
4.5 Input (EXTAL) Jitter Requirements 4-4

Chapter A Power Consumption Benchmark

Index

Data Sheet Conventions

$\overline{\text{OVERBAR}}$	Indicates a signal that is active when pulled low (For example, the $\overline{\text{RESET}}$ pin is active when low.)
"asserted"	Means that a high true (active high) signal is high or that a low true (active low) signal is low
"deasserted"	Means that a high true (active high) signal is low or that a low true (active low) signal is high

Examples:

Signal/Symbol	Logic State	Signal State	Voltage
$\overline{\text{PIN}}$	True	Asserted	V_{IL}/V_{OL}
$\overline{\text{PIN}}$	False	Deasserted	V_{IH}/V_{OH}
PIN	True	Asserted	V_{IH}/V_{OH}
PIN	False	Deasserted	V_{IL}/V_{OL}

Note: Values for V_{IL}, V_{OL}, V_{IH}, and V_{OH} are defined by individual product specifications.

Because of an order from the United States International Trade Commission, BGA-packaged product lines and part numbers indicated here currently are not available from Freescale for import or sale in the United States prior to September 2010: DSP56301

Downloaded from Elcodis.com electronic components distributor

DSP56301 Features

High-Performance DSP56300 Core

- 80/100 million instructions per second (MIPS) with a 80/100 MHz clock at 3.0–3.6 V
- Object code compatible with the DSP56000 core with highly parallel instruction set
- Data Arithmetic Logic Unit (Data ALU) with fully pipelined 24 × 24-bit parallel Multiplier-Accumulator (MAC), 56-bit parallel barrel shifter (fast shift and normalization; bit stream generation and parsing), conditional ALU instructions, and 24-bit or 16-bit arithmetic support under software control
- Program Control Unit (PCU) with Position Independent Code (PIC) support, addressing modes optimized for DSP applications (including immediate offsets), internal instruction cache controller, internal memory-expandable hardware stack, nested hardware DO loops, and fast auto-return interrupts
- Direct Memory Access (DMA) with six DMA channels supporting internal and external accesses; one-, two-, and three-dimensional transfers (including circular buffering); end-of-block-transfer interrupts; and triggering from interrupt lines and all peripherals
- Phase Lock Loop (PLL) allows change of low-power Divide Factor (DF) without loss of lock and output clock with skew elimination
- Hardware debugging support including On-Chip Emulation (OnCE™) module, Joint Test Action Group (JTAG) Test Access Port (TAP)

Internal Peripherals

- 32-bit parallel PCI/Universal Host Interface (HI32), PCI Rev. 2.1 compliant with glueless interface to other DSP563xx buses or ISA interface requiring only 74LS45-style buffers
- Two enhanced synchronous serial interfaces (ESSI), each with one receiver and three transmitters (allows six-channel home theater)
- Serial communications interface (SCI) with baud rate generator
- Triple timer module
- Up to forty-two programmable general-purpose input/output (GPIO) pins, depending on which peripherals are enabled

Internal Memories

- 3 K × 24-bit bootstrap ROM
- 8 K × 24-bit internal RAM total
- Program RAM, Instruction Cache, X data RAM, and Y data RAM sizes are programmable:

Program RAM Size	Instruction Cache Size	X Data RAM Size	Y Data RAM Size	Instruction Cache	Switch Mode
4096 × 24 bits	0	2048 × 24 bits	2048 × 24 bits	disabled	disabled
3072 × 24 bits	1024 × 24-bit	2048 × 24 bits	2048 × 24 bits	enabled	disabled
2048 × 24 bits	0	3072 × 24 bits	3072 × 24 bits	disabled	enabled
1024 × 24 bits	1024 × 24-bit	3072 × 24 bits	3072 × 24 bits	enabled	enabled

Because of an order from the United States International Trade Commission, BGA-packaged product lines and part numbers indicated here currently are not available from Freescale for import or sale in the United States prior to September 2010: DSP56301

Downloaded from Elcodis.com electronic components distributor

External Memory Expansion

- Data memory expansion to two 16 M × 24-bit word memory spaces in 24-Bit mode or two 64 K × 16-bit memory spaces in 16-Bit Compatibility mode
- Program memory expansion to one 16 M × 24-bit words memory space in 24-Bit mode or 64 K × 16-bit in 16-Bit Compatibility mode
- External memory expansion port
- Chip Select Logic for glueless interface to SRAMs
- Internal DRAM Controller for glueless interface to dynamic random access memory (DRAMs)

Reduced Power Dissipation

- Very low-power CMOS design
- Wait and Stop low-power standby modes
- Fully static design specified to operate down to 0 Hz (dc)
- Optimized power management circuitry (instruction-dependent, peripheral-dependent, and mode-dependent)

Packaging

The DSP56301 is available in a 208-pin thin quad flat pack (TQFP) or a 252-pin molded array process-ball grid array (MAP-BGA) package. Both packages are available in lead-bearing and lead-free versions.

Target Applications

Examples of target applications include:

- Wireless and wireline infrastructure applications
- Multi-channel wireless local loop systems
- DSP resource boards
- High-speed modem banks
- Packet telephony

Product Documentation

The three documents listed in the following table are required for a complete description of the DSP56301 and are necessary to design properly with the part. Documentation is available from the following sources. (See the back cover for detailed information.)

- A local Freescale distributor
- A Freescale semiconductor sales office
- A Freescale Literature Distribution Center
- The World Wide Web (WWW)

Table 1. DSP56301 Documentation

Name	Description	Order Number
DSP56300 Family Manual	Detailed description of the DSP56300 family processor core and instruction set	DSP56300FM/AD
DSP56301 User's Manual	Detailed functional description of the DSP56301 memory configuration, operation, and register programming	DSP56301UM/D
DSP56301 Technical Data	DSP56301 features list and physical, electrical, timing, and package specifications	DSP56301

Because of an order from the United States International Trade Commission, BGA-packaged product lines and part numbers indicated here currently are not available from Freescale for import or sale in the United States prior to September 2010: DSP56301

Downloaded from Elcodis.com electronic components distributor

Signals/Connections 1

The DSP56301 input and output signals are organized into functional groups, as shown in **Table 1-1** and illustrated in **Figure 1-1**. The DSP56301 operates from a 3 V supply; however, some of the inputs can tolerate 5 V. A special notice for this feature is added to the signal descriptions of those inputs.

Table 1-1. DSP56301 Functional Signal Groupings

Functional Group		Number of Signals by Package Type		Detailed Description
		TQFP	MAP-BGA	
Power (V_{CC})[1]		25	45	**Table 1-2**
Ground (GND)[1]		26	38	**Table 1-3**
Clock		2	2	**Table 1-4**
PLL		3	3	**Table 1-5**
Address Bus	Port A[2]	24	24	**Table 1-6**
Data Bus		24	24	**Table 1-7**
Bus Control		15	15	**Table 1-8**
Interrupt and Mode Control		5	5	**Table 1-9**
Host Interface (HI32)	Port B[3]	52	52	**Table 1-11**
Enhanced Synchronous Serial Interface (ESSI)	Ports C and D[4]	12	12	**Table 1-12** and **Table 1-13**
Serial Communication Interface (SCI)	Port E[5]	3	3	**Table 1-14**
Timer		3	3	**Table 1-15**
JTAG/OnCE Port		6	6	**Table 1-16**

Notes:
1. The number of available power and ground signals is package-dependent. In the TQFP package specific pins are dedicated internally to device subsystems. In the MAP-BGA package, power and ground connections (except those providing PLL power) connect to internal power and ground planes, respectively.
2. Port A signals define the external memory interface port, including the external address bus, data bus, and control signals.
3. Port B signals are the HI32 port signals multiplexed with the GPIO signals.
4. Port C and D signals are the two ESSI port signals multiplexed with the GPIO signals.
5. Port E signals are the SCI port signals multiplexed with the GPIO signals.
6. Each device also includes several no connect (NC) pins. The number of NC connections is package-dependent: the TQFP has 9 NCs and the MAP-BGA has 20 NCs. Do not connect any line, component, trace, or via to these pins. See **Chapter 3** for details.

Because of an order from the United States International Trade Commission, BGA-packaged product lines and part numbers indicated here currently are not available from Freescale for import or sale in the United States prior to September 2010: DSP56301

Downloaded from Elcodis.com electronic components distributor

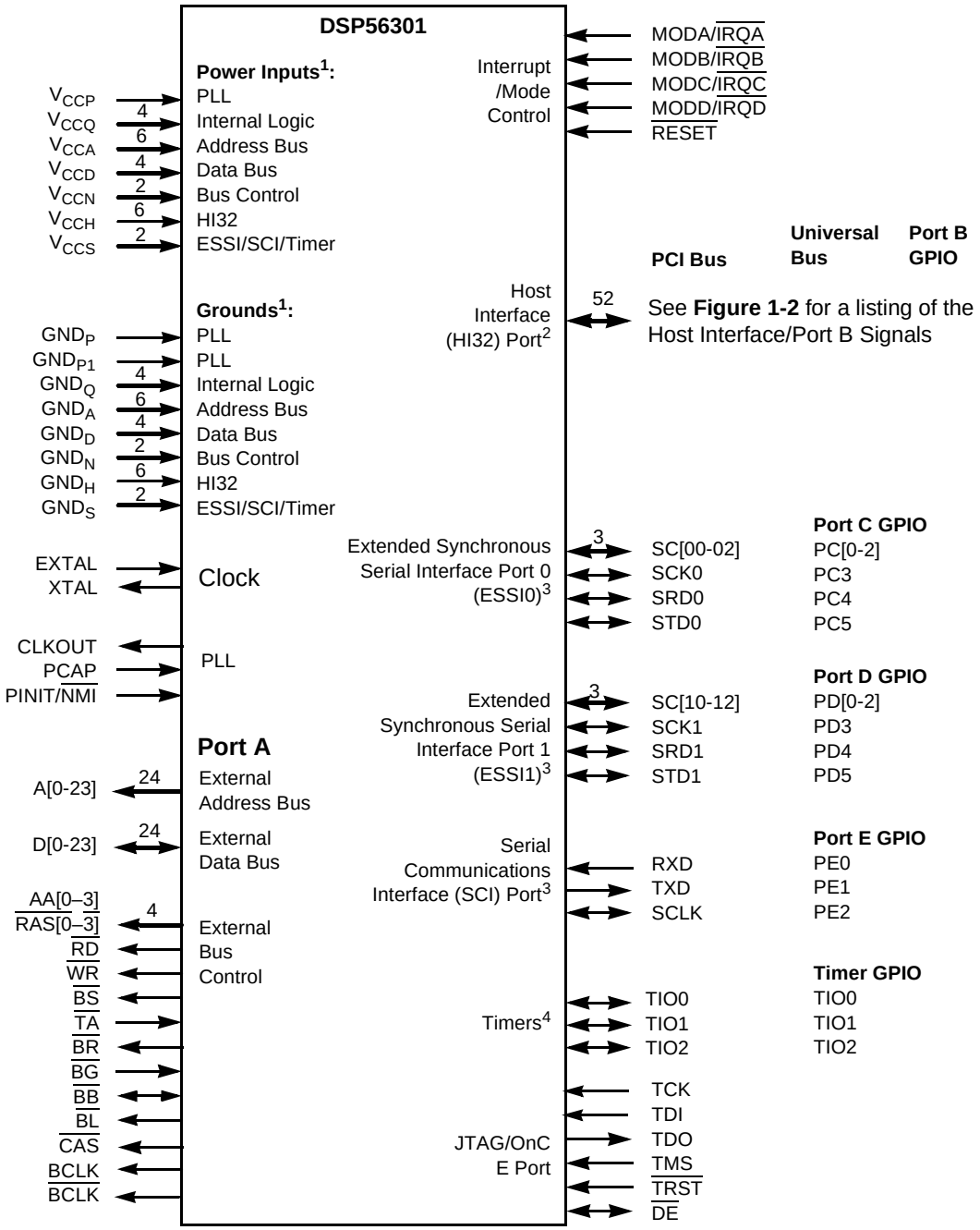

Notes:

1. Power and ground connections are shown for the TQFP package. The MAP-BGA package uses one V_{CCP} for the PLL power input and 44 V_{CC} pins that connect to an internal power plane. The MAP-BGA package uses two ground connections for the PLL (GND_P and GND_{P1}) and 36 GND pins that connect to an internal ground plane.
2. The HI32 port supports PCI and non-PCI bus configurations. Twenty-four HI32 signals can also be configured as GPIO signals (PB[0–23]).
3. The ESSI0, ESSI1, and SCI signals are multiplexed with the Port C GPIO signals (PC[0–5]), Port D GPIO signals (PD[0–5]), and Port E GPIO signals (PE[0–2]), respectively.
4. TIO[0–2] can be configured as GPIO signals.

Figure 1-1. Signals Identified by Functional Group

Because of an order from the United States International Trade Commission, BGA-packaged product lines and part numbers indicated here currently are not available from Freescale for import or sale in the United States prior to September 2010: DSP56301

Downloaded from Elcodis.com electronic components distributor

DSP56301	PCI Bus	Universal Bus	Port B GPIO	Host Port (HP) Reference
Host Interface (HI32)/ Port B Signals	HAD0	HA3	PB0	HP0
	HAD1	HA4	PB1	HP1
	HAD2	HA5	PB2	HP2
	HAD3	HA6	PB3	HP3
	HAD4	HA7	PB4	HP4
	HAD5	HA8	PB5	HP5
	HAD6	HA9	PB6	HP6
	HAD7	HA10	PB7	HP7
	HAD8	HD0	PB8	HP8
	HAD9	HD1	PB9	HP9
	HAD10	HD2	PB10	HP10
	HAD11	HD3	PB11	HP11
	HAD12	HD4	PB12	HP12
	HAD13	HD5	PB13	HP13
	HAD14	HD6	PB14	HP14
	HAD15	HD7	PB15	HP15
	HC0/$\overline{\text{HBE0}}$	HA0	PB16	HP16
	HC1/$\overline{\text{HBE1}}$	HA1	PB17	HP17
	HC2/$\overline{\text{HBE2}}$	HA2	PB18	HP18
	HC3/$\overline{\text{HBE3}}$	Tie to pull-up or V_{CC}	PB19	HP19
	$\overline{\text{HTRDY}}$	$\overline{\text{HDBEN}}$	PB20	HP20
	$\overline{\text{HIRDY}}$	$\overline{\text{HDBDR}}$	PB21	HP21
	$\overline{\text{HDEVSEL}}$	$\overline{\text{HSAK}}$	PB22	HP22
	HLOCK	$\overline{\text{HBS}}$	PB23	HP23
	$\overline{\text{HPAR}}$	$\overline{\text{HDAK}}$	Internal disconnect	HP24
	$\overline{\text{HPERR}}$	HDRQ	Internal disconnect	HP25
	$\overline{\text{HGNT}}$	$\overline{\text{HAEN}}$	Internal disconnect	HP26
	$\overline{\text{HREQ}}$	$\overline{\text{HTA}}$	Internal disconnect	HP27
	$\overline{\text{HSERR}}$	$\overline{\text{HIRQ}}$	Internal disconnect	HP28
	HSTOP	$\overline{\text{HWR}}$/$\overline{\text{HRW}}$	Internal disconnect	HP29
	$\overline{\text{HIDSEL}}$	$\overline{\text{HRD}}$/$\overline{\text{HDS}}$	Internal disconnect	HP30
	$\overline{\text{HFRAME}}$	Tie to pull-up or V_{CC}	Internal disconnect	HP31
	HCLK	Tie to pull-up or V_{CC}	Internal disconnect	HP32
	HAD16	HD8	Internal disconnect	HP33
	HAD17	HD9	Internal disconnect	HP34
	HAD18	HD10	Internal disconnect	HP35
	HAD19	HD11	Internal disconnect	HP36
	HAD20	HD12	Internal disconnect	HP37
	HAD21	HD13	Internal disconnect	HP38
	HAD22	HD14	Internal disconnect	HP39
	HAD23	HD15	Internal disconnect	HP40
	HAD24	HD16	Internal disconnect	HP41
	HAD25	HD17	Internal disconnect	HP42
	HAD26	HD18	Internal disconnect	HP43
	HAD27	HD19	Internal disconnect	HP44
	HAD28	HD20	Internal disconnect	HP45
	HAD29	HD21	Internal disconnect	HP46
	HAD30	HD22	Internal disconnect	HP47
	HAD31	HD23	Internal disconnect	HP48
	$\overline{\text{HRST}}$	$\overline{\text{HRST}}$	Internal disconnect	HP49
	HINTA	HINTA	Internal disconnect	HP50
	PVCL	Leave unconnected	Leave unconnected	PVCL

Note: HPxx is a reference only and is not a signal name. GPIO references formerly designated as HIOxx have been renamed PBxx for consistency with other Freescale DSPs.

Figure 1-2. Host Interface/Port B Detail Signal Diagram

Because of an order from the United States International Trade Commission, BGA-packaged product lines and part numbers indicated here currently are not available from Freescale for import or sale in the United States prior to September 2010: DSP56301

Downloaded from Elcodis.com electronic components distributor

1.1 Power

Table 1-2. Power Inputs

Power Name	Description
V_{CCP}	**PLL Power** Isolated power for the Phase Lock Loop (PLL). The voltage should be well-regulated and the input should be provided with an extremely low impedance path to the V_{CC} power rail.
V_{CCQ}	**Quiet Power** Isolated power for the internal processing logic. This input must be tied externally to all other chip power inputs. The user must provide adequate external decoupling capacitors.
V_{CCA}	**Address Bus Power** Isolated power for sections of the address bus I/O drivers. This input must be tied externally to all other chip power inputs. The user must provide adequate external decoupling capacitors.
V_{CCD}	**Data Bus Power** Isolated power for sections of the data bus I/O drivers. This input must be tied externally to all other chip power inputs. The user must provide adequate external decoupling capacitors.
V_{CCN}	**Bus Control Power** Isolated power for the bus control I/O drivers. This input must be tied externally to all other chip power inputs. The user must provide adequate external decoupling capacitors.
V_{CCH}	**Host Power** Isolated power for the HI32 I/O drivers. This input must be tied externally to all other chip power inputs. The user must provide adequate external decoupling capacitors.
V_{CCS}	**ESSI, SCI, and Timer Power** Isolated power for the ESSI, SCI, and timer I/O drivers. This input must be tied externally to all other chip power inputs. The user must provide adequate external decoupling capacitors.
Note:	These designations are package-dependent. Some packages connect all V_{CC} inputs except V_{CCP} to each other internally. On those packages, all power input except V_{CCP} are labeled V_{CC}.

1.2 Ground

Table 1-3. Grounds

Ground Name	Description
GND_P	**PLL Ground** Ground dedicated for PLL use. The connection should be provided with an extremely low-impedance path to ground. V_{CCP} should be bypassed to GND_P by a 0.47 µF capacitor located as close as possible to the chip package.
GND_{P1}	**PLL Ground 1** Ground dedicated for PLL use. The connection should be provided with an extremely low-impedance path to ground.
GND_Q	**Quiet Ground** Isolated ground for the internal processing logic. This connection must be tied externally to all other chip ground connections. The user must provide adequate external decoupling capacitors.
GND_A	**Address Bus Ground** Isolated ground for sections of the address bus I/O drivers. This connection must be tied externally to all other chip ground connections. The user must provide adequate external decoupling capacitors.
GND_D	**Data Bus Ground** Isolated ground for sections of the data bus I/O drivers. This connection must be tied externally to all other chip ground connections. The user must provide adequate external decoupling capacitors.

Because of an order from the United States International Trade Commission, BGA-packaged product lines and part numbers indicated here currently are not available from Freescale for import or sale in the United States prior to September 2010: DSP56301

Downloaded from Elcodis.com electronic components distributor

Table 1-3. Grounds

Ground Name	Description
GND_N	**Bus Control Ground** Isolated ground for the bus control I/O drivers. This connection must be tied externally to all other chip ground connections. The user must provide adequate external decoupling capacitors.
GND_H	**Host Ground** Isolated ground for the HI32 I/O drivers. This connection must be tied externally to all other chip ground connections. The user must provide adequate external decoupling capacitors.
GND_S	**ESSI, SCI, and Timer Ground** Isolated ground for the ESSI, SCI, and timer I/O drivers. This connection must be tied externally to all other chip ground connections. The user must provide adequate external decoupling capacitors.
Note: These designations are package-dependent. Some packages connect all GND inputs except GND_P and GND_{P1} to each other internally. On those packages, all ground connections except GND_P and GND_{P1} are labeled GND.	

1.3 Clock

Table 1-4. Clock Signals

Signal Name	Type	State During Reset	Signal Description
EXTAL	Input	Input	**External Clock/Crystal Input** Interfaces the internal crystal oscillator input to an external crystal or an external clock.
XTAL	Output	Chip-driven	**Crystal Output** Connects the internal crystal oscillator output to an external crystal. If an external clock is used, leave XTAL unconnected.

1.4 Phase Lock Loop (PLL)

Table 1-5. Phase Lock Loop Signals

Signal Name	Type	State During Reset	Signal Description
CLKOUT	Output	Chip-driven	**Clock Output** Provides an output clock synchronized to the internal core clock phase. If the PLL is enabled and both the multiplication and division factors equal one, then CLKOUT is also synchronized to EXTAL. If the PLL is disabled, the CLKOUT frequency is half the frequency of EXTAL.
PCAP	Input	Input	**PLL Capacitor** Connects an off-chip capacitor to the PLL filter. Connect one capacitor terminal to PCAP and the other terminal to V_{CCP}. If the PLL is not used, PCAP can be tied to V_{CC}, GND, or left floating.

Because of an order from the United States International Trade Commission, BGA-packaged product lines and part numbers indicated here currently are not available from Freescale for import or sale in the United States prior to September 2010: DSP56301

Downloaded from Elcodis.com electronic components distributor

Table 1-5. Phase Lock Loop Signals (Continued)

Signal Name	Type	State During Reset	Signal Description
PINIT/$\overline{\text{NMI}}$	Input	Input	**PLL Initial/Non-Maskable Interrupt** During assertion of $\overline{\text{RESET}}$, the value of PINIT/$\overline{\text{NMI}}$ is written into the PLL Enable (PEN) bit of the PLL control register, determining whether the PLL is enabled or disabled. After $\overline{\text{RESET}}$ deassertion and during normal instruction processing, the PINIT/$\overline{\text{NMI}}$ Schmitt-trigger input is a negative-edge-triggered Non-Maskable Interrupt (NMI) request internally synchronized to CLKOUT. PINIT/$\overline{\text{NMI}}$ can tolerate 5 V.

1.5 External Memory Expansion Port (Port A)

Note: When the DSP56301 enters a low-power stand-by mode (Stop or Wait), it releases bus mastership and tri-states the relevant Port A signals: A[0–23], D[0–23], AA0/$\overline{\text{RAS0}}$–AA3/$\overline{\text{RAS3}}$, $\overline{\text{RD}}$, $\overline{\text{WR}}$, $\overline{\text{BB}}$, $\overline{\text{CAS}}$, BCLK, and $\overline{\text{BCLK}}$. If hardware refresh of external DRAM is enabled, Port A exits the Wait mode to allow the refresh to occur and then returns to the Wait mode.

1.5.1 External Address Bus

Table 1-6. External Address Bus Signals

Signal Name	Type	State During Reset	Signal Description
A[0–23]	Output	Tri-stated	**Address Bus** When the DSP is the bus master, A[0–23] specify the address for external program and data memory accesses. Otherwise, the signals are tri-stated. To minimize power dissipation, A[0–23] do not change state when external memory spaces are not being accessed.

1.5.2 External Data Bus

Table 1-7. External Data Bus Signals

Signal Name	Type	State During Reset	Signal Description
D[0–23]	Input/Output	Tri-stated	**Data Bus** When the DSP is the bus master, D[0–23] provide the bidirectional data bus for external program and data memory accesses. Otherwise, D[0–23] are tri-stated.

Because of an order from the United States International Trade Commission, BGA-packaged product lines and part numbers indicated here currently are not available from Freescale for import or sale in the United States prior to September 2010: DSP56301

Downloaded from Elcodis.com electronic components distributor

1.5.3 External Bus Control

Table 1-8. External Bus Control Signals

Signal Name	Type	State During Reset	Signal Description
AA0/$\overline{\text{RAS0}}$–AA3/$\overline{\text{RAS3}}$	Output	Tri-stated	**Address Attribute or Row Address Strobe** As AA, these signals function as chip selects or additional address lines. Unlike address lines, however, the AA lines do not hold their state after a read or write operation. As $\overline{\text{RAS}}$, these signals can be used for Dynamic Random Access Memory (DRAM) interface. These signals have programmable polarity.
$\overline{\text{RD}}$	Output	Tri-stated	**Read Enable** When the DSP is the bus master, $\overline{\text{RD}}$ is asserted to read external memory on the data bus (D[0–23]). Otherwise, $\overline{\text{RD}}$ is tri-stated.
$\overline{\text{WR}}$	Output	Tri-stated	**Write Enable** When the DSP is the bus master, $\overline{\text{WR}}$ is asserted to write external memory on the data bus (D[0–23]). Otherwise, $\overline{\text{WR}}$ is tri-stated.
$\overline{\text{TA}}$	Input	Ignored Input	**Transfer Acknowledge** If the DSP56301 is the bus master and there is no external bus activity, or the DSP56301 is not the bus master, the $\overline{\text{TA}}$ input is ignored. The $\overline{\text{TA}}$ input is a Data Transfer Acknowledge (DTACK) function that can extend an external bus cycle indefinitely. Any number of wait states (1, 2,..., infinity) can be added to the wait states inserted by the BCR by keeping $\overline{\text{TA}}$ deasserted. In typical operation, $\overline{\text{TA}}$ is deasserted at the start of a bus cycle, asserted to enable completion of the bus cycle, and deasserted before the next bus cycle. The current bus cycle completes one clock period after $\overline{\text{TA}}$ is asserted synchronous to CLKOUT. The number of wait states is determined by the $\overline{\text{TA}}$ input or by the Bus Control Register (BCR), whichever is longer. The BCR can set the minimum number of wait states in external bus cycles. To use the $\overline{\text{TA}}$ functionality, the BCR must be programmed to at least one wait state. A zero wait state access cannot be extended by $\overline{\text{TA}}$ deassertion; otherwise improper operation may result. $\overline{\text{TA}}$ can operate synchronously or asynchronously, depending on the setting of the TAS bit in the Operating Mode Register (OMR). $\overline{\text{TA}}$ functionality cannot be used during DRAM-type accesses; otherwise improper operation may result.
$\overline{\text{BR}}$	Output	Output (deasserted)	**Bus Request** Asserted when the DSP requests bus mastership and deasserted when the DSP no longer needs the bus. $\overline{\text{BR}}$ can be asserted or deasserted independently of whether the DSP56301 is a bus master or a bus slave. Bus “parking” allows $\overline{\text{BR}}$ to be deasserted even though the DSP56301 is the bus master (see the description of bus “parking” in the $\overline{\text{BB}}$ signal description). The Bus Request Hole (BRH) bit in the BCR allows $\overline{\text{BR}}$ to be asserted under software control, even though the DSP does not need the bus. $\overline{\text{BR}}$ is typically sent to an external bus arbitrator that controls the priority, parking and tenure of each master on the same external bus. $\overline{\text{BR}}$ is affected only by DSP requests for the external bus, never for the internal bus. During hardware reset, $\overline{\text{BR}}$ is deasserted and the arbitration is reset to the bus slave state.
$\overline{\text{BG}}$	Input	Ignored Input	**Bus Grant** Must be asserted/deasserted synchronous to CLKOUT for proper operation. An external bus arbitration circuit asserts $\overline{\text{BG}}$ when the DSP56301 becomes the next bus master. When $\overline{\text{BG}}$ is asserted, the DSP56301 must wait until $\overline{\text{BB}}$ is deasserted before taking bus mastership. When $\overline{\text{BG}}$ is deasserted, bus mastership is typically given up at the end of the current bus cycle. This may occur in the middle of an instruction that requires more than one external bus cycle for execution.

Because of an order from the United States International Trade Commission, BGA-packaged product lines and part numbers indicated here currently are not available from Freescale for import or sale in the United States prior to September 2010: DSP56301

Downloaded from Elcodis.com electronic components distributor

Table 1-8. External Bus Control Signals (Continued)

Signal Name	Type	State During Reset	Signal Description
$\overline{BB}$	Input/ Output	Input	**Bus Busy** Indicates that the bus is active and must be asserted and deasserted synchronous to CLKOUT. Only after $\overline{BB}$ is deasserted can the pending bus master become the bus master (and then assert the signal again). The bus master can keep $\overline{BB}$ asserted after ceasing bus activity, regardless of whether $\overline{BR}$ is asserted or deasserted. This is called “bus parking” and allows the current bus master to reuse the bus without re-arbitration until another device requires the bus. $\overline{BB}$ is deasserted by an “active pull-up” method (that is, $\overline{BB}$ is driven high and then released and held high by an external pull-up resistor). $\overline{BB}$ requires an external pull-up resistor.
$\overline{BL}$	Output	Driven high (deasserted)	**Bus Lock**—$\overline{BL}$ is asserted at the start of an external divisible Read-Modify-Write (RMW) bus cycle, remains asserted between the read and write cycles, and is deasserted at the end of the write bus cycle. This provides an “early bus start” signal for the bus controller. BL may be used to “resource lock” an external multi-port memory for secure semaphore updates. Early deassertion provides an “early bus end” signal useful for external bus control. If the external bus is not used during an instruction cycle, BL remains deasserted until the next external indivisible RMW cycle. The only instructions that assert $\overline{BL}$ automatically are the BSET, CLR, and BCHG instructions when they are used to modify external memory. An operation can also assert $\overline{BL}$ by setting the BLH bit in the Bus Control Register.
$\overline{CAS}$	Output	Tri-stated	**Column Address Strobe** When the DSP is the bus master, DRAM uses $\overline{CAS}$ to strobe the column address. Otherwise, if the Bus Mastership Enable (BME) bit in the DRAM Control Register is cleared, the signal is tri-stated.
BCLK	Output	Tri-stated	**Bus Clock** When the DSP is the bus master, BCLK is active when the OMR[ATE] is set. When BCLK is active and synchronized to CLKOUT by the internal PLL, BCLK precedes CLKOUT by one-fourth of a clock cycle.
$\overline{BCLK}$	Output	Tri-stated	**Bus Clock Not** When the DSP is the bus master, $\overline{BCLK}$ is the inverse of the BCLK signal. Otherwise, the signal is tri-stated.

Because of an order from the United States International Trade Commission, BGA-packaged product lines and part numbers indicated here currently are not available from Freescale for import or sale in the United States prior to September 2010: DSP56301

Downloaded from Elcodis.com electronic components distributor

1.6 Interrupt and Mode Control

The interrupt and mode control signals select the chip's operating mode as it comes out of hardware reset. After RESET is deasserted, these inputs are hardware interrupt request lines.

Table 1-9. Interrupt and Mode Control

Signal Name	Type	State During Reset	Signal Description
MODA	Input	Input	**Mode Select A** Selects the initial chip operating mode during hardware reset and becomes a level-sensitive or negative-edge-triggered, maskable interrupt request input IRQA during normal instruction processing. MODA, MODB, MODC, and MODD select one of sixteen initial chip operating modes, latched into the OMR when the RESET signal is deasserted.
IRQA	Input		**External Interrupt Request A** Internally synchronized to CLKOUT. If IRQA is asserted synchronous to CLKOUT, multiple processors can be re-synchronized using the WAIT instruction and asserting IRQA to exit the Wait state. If the processor is in the Stop stand-by state and IRQA is asserted, the processor exits the Stop state. These inputs are 5 V tolerant.
MODB	Input	Input	**Mode Select B** Selects the initial chip operating mode during hardware reset and becomes a level-sensitive or negative-edge-triggered, maskable interrupt request input IRQB during normal instruction processing. MODA, MODB, MODC, and MODD select one of sixteen initial chip operating modes, latched into the OMR when the RESET signal is deasserted.
IRQB	Input		**External Interrupt Request B** Internally synchronized to CLKOUT. If IRQB is asserted synchronous to CLKOUT, multiple processors can be re-synchronized using the WAIT instruction and asserting IRQB to exit the Wait state. If the processor is in the Stop stand-by state and IRQC is asserted, the processor will exit the Stop state. These inputs are 5 V tolerant.
MODC	Input	Input	**Mode Select C** Selects the initial chip operating mode during hardware reset and becomes a level-sensitive or negative-edge-triggered, maskable interrupt request input IRQC during normal instruction processing. MODA, MODB, MODC, and MODD select one of sixteen initial chip operating modes, latched into the OMR when the RESET signal is deasserted.
IRQC	Input		**External Interrupt Request C** Internally synchronized to CLKOUT. If IRQC is asserted synchronous to CLKOUT, multiple processors can be re-synchronized using the WAIT instruction and asserting IRQC to exit the Wait state. If the processor is in the Stop stand-by state and IRQC is asserted, the processor exits the Stop state. These inputs are 5 V tolerant.

Because of an order from the United States International Trade Commission, BGA-packaged product lines and part numbers indicated here currently are not available from Freescale for import or sale in the United States prior to September 2010: DSP56301

Downloaded from Elcodis.com electronic components distributor

Table 1-9. Interrupt and Mode Control (Continued)

Signal Name	Type	State During Reset	Signal Description
MODD $\overline{\text{IRQD}}$	Input Input	Input	**Mode Select D** Selects the initial chip operating mode during hardware reset and becomes a level-sensitive or negative-edge-triggered, maskable interrupt request input $\overline{\text{IRQD}}$ during normal instruction processing. MODA, MODB, MODC, and MODD select one of sixteen initial chip operating modes, latched into the OMR when the $\overline{\text{RESET}}$ signal is deasserted. **External Interrupt Request D** Internally synchronized to CLKOUT. If $\overline{\text{IRQD}}$ is asserted synchronous to CLKOUT, multiple processors can be re-synchronized using the WAIT instruction and asserting $\overline{\text{IRQD}}$ to exit the Wait state. If the processor is in the Stop stand-by state and $\overline{\text{IRQD}}$ is asserted, the processor exits the Stop state. These inputs are 5 V tolerant.
$\overline{\text{RESET}}$	Input	Input	**Reset** Deassertion of $\overline{\text{RESET}}$ is internally synchronized to the clock out (CLKOUT). When asserted, the chip is placed in the Reset state and the internal phase generator is reset. The Schmitt-trigger input allows a slowly rising input (such as a capacitor charging) to reset the chip reliably. If $\overline{\text{RESET}}$ is deasserted synchronous to CLKOUT, exact start-up timing is guaranteed, allowing multiple processors to start synchronously and operate together in “lock-step.” When the $\overline{\text{RESET}}$ signal is deasserted, the initial chip operating mode is latched from the MODA, MODB, MODC, and MODD inputs. The $\overline{\text{RESET}}$ signal must be asserted after power-up. This input is 5 V tolerant.

1.7 Host Interface (HI32)

The Host Interface (HI32) provides fast parallel data to a 32-bit port directly connected to the host bus. The HI32 supports a variety of standard buses and directly connects to a PCI bus and a number of industry-standard microcomputers, microprocessors, DSPs, and DMA hardware.

1.7.1 Host Port Usage Considerations

Careful synchronization is required when the system reads multiple-bit registers that are written by another asynchronous system. This is a common problem when two asynchronous systems are connected (as they are in the Host port). The considerations for proper operation are discussed in **Table 1-10**.

Table 1-10. Host Port Usage Considerations

Action	Description
Asynchronous read of receive byte registers	When reading the receive byte registers, Receive register High (RXH), Receive register Middle (RXM), or Receive register Low (RXL), use interrupts or poll the Receive register Data Full (RXDF) flag that indicates data is available. This assures that the data in the receive byte registers is valid.
Asynchronous write to transmit byte registers	Do not write to the transmit byte registers, Transmit register High (TXH), Transmit register Middle (TXM), or Transmit register Low (TXL), unless the Transmit register Data Empty (TXDE) bit is set, indicating that the transmit byte registers are empty. This guarantees that the transmit byte registers transfer valid data to the Host Receive (HRX) register.

Because of an order from the United States International Trade Commission, BGA-packaged product lines and part numbers indicated here currently are not available from Freescale for import or sale in the United States prior to September 2010: DSP56301

Downloaded from Elcodis.com electronic components distributor

Table 1-10. Host Port Usage Considerations (Continued)

Action	Description
Asynchronous write to host vector	Change the Host Vector (HV) register only when the Host Command bit (HC) is clear. This practice guarantees that the DSP interrupt control logic receives a stable vector.

1.7.2 Host Port Configuration

HI32 signal functions vary according to the programmed configuration of the interface as determined by the 24-bit DSP Control Register (DCTR). Refer to the *DSP56301 User's Manual* for details on HI32 configuration registers.

Table 1-11. Host Interface

Signal Name	Type	State During Reset	Signal Description
HAD[0–7]	Input/Output	Tri-stated	**Host Address/Data 0–7** When the HI32 is programmed to interface with a PCI bus and the HI function is selected, these signals are lines 0–7 of the Address/Data bus.
HA[3–10]	Input		**Host Address 3–10** When HI32 is programmed to interface with a universal, non-PCI bus and the HI function is selected, these signals are lines 3–10 of the Address bus.
PB[0–7]	Input or Output		**Port B 0–7** When the HI32 is configured as GPIO through the DCTR, these signals are individually programmed through the HI32 Data Direction Register (DIRH). These inputs are 5 V tolerant.
HAD[8–15]	Input/Output	Tri-stated	**Host Address/Data 8–15** When the HI32 is programmed to interface with a PCI bus and the HI function is selected, these signals are lines 8–15 of the Address/Data bus.
HD[0–7]	Input/Output		**Host Data 0–7** When HI32 is programmed to interface with a universal non-PCI bus and the HI function is selected, these signals are lines 0–7 of the Data bus.
PB[8–15]	Input or Output		**Port B 8–15** When the HI32 is configured as GPIO through the DCTR, these signals are individually programmed through the HI32 DIRH. These inputs are 5 V tolerant.
HC[0–3]/ HBE[0–3]	Input/Output	Tri-stated	**Command 0–3/Byte Enable 0–3** When the HI32 is programmed to interface with a PCI bus and the HI function is selected, these signals are lines 0–7 of the Address/Data bus.
HA[0–2]	Input		**Host Address 0–2** When HI32 is programmed to interface with a universal, non-PCI bus and the HI function is selected, these signals are lines 0–2 of the Address bus. The fourth signal in this set should connect to a pull-up resistor or directly to V_{CC} when a non-PCI bus is used.
PB[16–19]	Input or Output		**Port B 16–19** When the HI32 is configured as GPIO through the DCTR, these signals are individually programmed through the HI32 DIRH. These inputs are 5 V tolerant.

Because of an order from the United States International Trade Commission, BGA-packaged product lines and part numbers indicated here currently are not available from Freescale for import or sale in the United States prior to September 2010: DSP56301

Downloaded from Elcodis.com electronic components distributor

Table 1-11. Host Interface (Continued)

Signal Name	Type	State During Reset	Signal Description
$\overline{\text{HTRDY}}$	Input/ Output	Tri-stated	**Host Target Ready** When the HI32 is programmed to interface with a PCI bus and the HI function is selected, this is the Host Target Ready signal.
$\overline{\text{HDBEN}}$	Output		**Host Data Bus Enable** When HI32 is programmed to interface with a universal, non-PCI bus and the HI function is selected, this is the Host Data Bus Enable signal.
PB20	Input or Output		**Port B 20** When the HI32 is configured as GPIO through the DCTR, this signal is individually programmed through the HI32 DIRH. This input is 5 V tolerant.
$\overline{\text{HIRDY}}$	Input/ Output	Tri-stated	**Host Initiator Ready** When the HI32 is programmed to interface with a PCI bus and the HI function is selected, this is the Host Initiator Ready signal.
$\overline{\text{HDBDR}}$	Output		**Host Data Bus Direction** When HI32 is programmed to interface with a universal, non-PCI bus and the HI function is selected, this is the Host Data Bus Direction signal.
PB21	Input or Output		**Port B 21** When the HI32 is configured as GPIO through the DCTR, this signal is individually programmed through the HI32 DIRH. This input is 5 V tolerant.
$\overline{\text{HDEVSEL}}$	Input/ Output	Tri-stated	**Host Device Select** When the HI32 is programmed to interface with a PCI bus and the HI function is selected, this is the Host Device Select signal.
$\overline{\text{HSAK}}$	Output		**Host Select Acknowledge** When HI32 is programmed to interface with a universal, non-PCI bus and the HI function is selected, this is the Host Select Acknowledge signal.
PB22	Input or Output		**Port B 22** When the HI32 is configured as GPIO through the DCTR, this signal is individually programmed through the HI32 DIRH. This input is 5 V tolerant.
$\overline{\text{HLOCK}}$	Input	Tri-stated	**Host Lock** When the HI32 is programmed to interface with a PCI bus and the HI function is selected, this is the Host Lock signal.
$\overline{\text{HBS}}$	Input		**Host Bus Strobe** When HI32 is programmed to interface with a universal, non-PCI bus and the HI function is selected, this is the Host Bus Strobe Schmitt-trigger signal.
PB23	Input or Output		**Port B 23** When the HI32 is configured as GPIO through the DCTR, this signal is individually programmed through the HI32 DIRH. This input is 5 V tolerant.

Because of an order from the United States International Trade Commission, BGA-packaged product lines and part numbers indicated here currently are not available from Freescale for import or sale in the United States prior to September 2010: DSP56301

Downloaded from Elcodis.com electronic components distributor

Table 1-11. Host Interface (Continued)

Signal Name	Type	State During Reset	Signal Description
HPAR $\overline{\text{HDAK}}$	Input/ Output Input	Tri-stated	**Host Parity** When the HI32 is programmed to interface with a PCI bus and the HI function is selected, this is the Host Parity signal. **Host DMA Acknowledge** When HI32 is programmed to interface with a universal, non-PCI bus and the HI function is selected, this is the Host DMA Acknowledge Schmitt-trigger signal. **Port B** When the HI32 is configured as GPIO through the DCTR, this signal is internally disconnected. This input is 5 V tolerant.
$\overline{\text{HPERR}}$ HDRQ	Input/ Output Output	Tri-stated	**Host Parity Error** When the HI32 is programmed to interface with a PCI bus and the HI function is selected, this is the Host Parity Error signal. **Host DMA Request** When HI32 is programmed to interface with a universal, non-PCI bus and the HI function is selected, this is the Host DMA Request output. **Port B** When the HI32 is configured as GPIO through the DCTR, this signal is internally disconnected. This input is 5 V tolerant.
$\overline{\text{HGNT}}$ HAEN	Input Input	Input	**Host Bus Grant** When the HI32 is programmed to interface with a PCI bus and the HI function is selected, this is the Host Bus Grant signal. **Host Address Enable** When HI32 is programmed to interface with a universal, non-PCI bus and the HI function is selected, this is the Host Address Enable output signal. **Port B** When the HI32 is configured as GPIO through the DCTR, this signal is internally disconnected. This input is 5 V tolerant.
$\overline{\text{HREQ}}$ $\overline{\text{HTA}}$	Output Output	Tri-stated	**Host Bus Request** When the HI32 is programmed to interface with a PCI bus and the HI function is selected, this is the Host Bus Request signal. **Host Transfer Acknowledge**—When HI32 is programmed to interface with a universal, non-PCI bus and the HI function is selected, this is the Host Data Bus Enable signal. $\overline{\text{HTA}}$ can be programmed as active high or active low. **Port B** When the HI32 is configured as GPIO through the DCTR, this signal is internally disconnected. This input is 5 V tolerant.

Because of an order from the United States International Trade Commission, BGA-packaged product lines and part numbers indicated here currently are not available from Freescale for import or sale in the United States prior to September 2010: DSP56301

Downloaded from Elcodis.com electronic components distributor

Table 1-11. Host Interface (Continued)

Signal Name	Type	State During Reset	Signal Description
$\overline{\text{HSERR}}$ $\overline{\text{HIRQ}}$	Output, open drain Output, open drain	Tri-stated	**Host System Error** When the HI32 is programmed to interface with a PCI bus and the HI function is selected, this is the Host System Error signal. **Host Interrupt Request** When HI32 is programmed to interface with a universal, non-PCI bus and the HI function is selected, this is the Host Interrupt Request signal. **Port B** When the HI32 is configured as GPIO through the DCTR, this signal is internally disconnected. This input is 5 V tolerant.
$\overline{\text{HSTOP}}$ $\overline{\text{HWR}}$/HRW	Input/ Output Input	Tri-stated	**Host Stop** When the HI32 is programmed to interface with a PCI bus and the HI function is selected, this is the Host Stop signal. **Host Write/Host Read-Write** When HI32 is programmed to interface with a universal, non-PCI bus and the HI function is selected, this is the Host Write/Host Read-Write Schmitt-trigger signal. **Port B** When the HI32 is configured as GPIO through the DCTR, this signal is internally disconnected. This input is 5 V tolerant.
HIDSEL $\overline{\text{HRD}}$/$\overline{\text{HDS}}$	Input Input	Input	**Host Initialization Device Select** When the HI32 is programmed to interface with a PCI bus and the HI function is selected, this is the Host Initialization Device Select signal. **Host Read/Host Data Strobe** When HI32 is programmed to interface with a universal, non-PCI bus and the HI function is selected, this is the Host Data Read/Host Data Strobe Schmitt-trigger signal. **Port B** When the HI32 is configured as GPIO through the DCTR, this signal is internally disconnected. This input is 5 V tolerant.
$\overline{\text{HFRAME}}$	Input/ Output	Tri-stated	**Host Frame** When the HI32 is programmed to interface with a PCI bus and the HI function is selected, this is the Host cycle Frame signal. **Non-PCI bus** When HI32 is programmed to interface with a universal, non-PCI bus and the HI function is selected, this signal must be connected to a pull-up resistor or directly to V_{CC}. **Port B** When the HI32 is configured as GPIO through the DCTR, this signal is internally disconnected. This input is 5 V tolerant.

Because of an order from the United States International Trade Commission, BGA-packaged product lines and part numbers indicated here currently are not available from Freescale for import or sale in the United States prior to September 2010: DSP56301

Downloaded from Elcodis.com electronic components distributor

Table 1-11. Host Interface (Continued)

Signal Name	Type	State During Reset	Signal Description
HCLK	Input	Input	**Host Clock** When the HI32 is programmed to interface with a PCI bus and the HI function is selected, this is the Host Bus Clock input. **Non-PCI bus** When HI32 is programmed to interface a universal non-PCI bus and the HI function is selected, this signal must be connected to a pull-up resistor or directly to V_{CC}. **Port B** When the HI32 is configured as GPIO through the DCTR, this signal is internally disconnected. This input is 5 V tolerant.
HAD[16–31] HD[8–23]	Input/Output Input/Output	Tri-stated	**Host Address/Data 16–31** When the HI32 is programmed to interface with a PCI bus and the HI function is selected, these signals are lines 16–31 of the Address/Data bus. **Host Data 8–23** When HI32 is programmed to interface with a universal, non-PCI bus and the HI function is selected, these signals are lines 8–23 of the Data bus. **Port B** When the HI32 is configured as GPIO through the DCTR, these signals are internally disconnected. These inputs are 5 V tolerant.
$\overline{\text{HRST}}$ HRST	Input Input	Tri-stated	**Hardware Reset** When the HI32 is programmed to interface with a PCI bus and the HI function is selected, this is the Hardware Reset input. **Hardware Reset** When HI32 is programmed to interface with a universal, non-PCI bus and the HI function is selected, this is the Hardware Reset Schmitt-trigger signal. **Port B** When the HI32 is configured as GPIO through the DCTR, this signal is internally disconnected. This input is 5 V tolerant.
$\overline{\text{HINTA}}$	Output, open drain	Tri-stated	**Host Interrupt A** When the HI function is selected, this signal is the Interrupt A open-drain output. **Port B** When the HI32 is configured as GPIO through the DCTR, this signal is internally disconnected. This input is 5 V tolerant.
PVCL	Input	Input	**PCI Voltage Clamp** When the HI32 is programmed to interface with a PCI bus and the HI function is selected and the PCI bus uses a 3 V signal environment, connect this pin to V_{CC} (3.3 V) to enable the high voltage clamping required by the PCI specifications. In all other cases, including a 5 V PCI signal environment, leave the input unconnected.

Because of an order from the United States International Trade Commission, BGA-packaged product lines and part numbers indicated here currently are not available from Freescale for import or sale in the United States prior to September 2010: DSP56301

Downloaded from Elcodis.com electronic components distributor

1.8 Enhanced Synchronous Serial Interface 0 (ESSI0)

Two synchronous serial interfaces (ESSI0 and ESSI1) provide a full-duplex serial port for serial communication with a variety of serial devices, including one or more industry-standard codecs, other DSPs, microprocessors, and peripherals that implement the Serial Peripheral Interface (SPI).

Table 1-12. Enhanced Synchronous Serial Interface 0 (ESSI0)

Signal Name	Type	State During Reset	Signal Description
SC00 PC0	Input or Output	Input	**Serial Control 0** Functions in either Synchronous or Asynchronous mode. For Asynchronous mode, this signal is the receive clock I/O (Schmitt-trigger input). For Synchronous mode, this signal is either for Transmitter 1 output or Serial I/O Flag 0. **Port C 0** The default configuration following reset is GPIO. For PC0, signal direction is controlled through the Port Directions Register (PRR0). The signal can be configured as ESSI signal SC00 through the Port Control Register (PCR0). This input is 5 V tolerant.
SC01 PC1	Input/Output Input or Output	Input	**Serial Control 1** Functions in either Synchronous or Asynchronous mode. For Asynchronous mode, this signal is the receiver frame sync I/O. For Synchronous mode, this signal is either Transmitter 2 output or Serial I/O Flag 1. **Port C 1** The default configuration following reset is GPIO. For PC1, signal direction is controlled through PRR0. The signal can be configured as an ESSI signal SC01 through PCR0. This input is 5 V tolerant.
SC02 PC2	Input/Output Input or Output	Input	**Serial Control Signal 2** The frame sync for both the transmitter and receiver in Synchronous mode, and for the transmitter only in Asynchronous mode. When configured as an output, this signal is the internally generated frame sync signal. When configured as an input, this signal receives an external frame sync signal for the transmitter (and the receiver in synchronous operation). **Port C 2** The default configuration following reset is GPIO. For PC2, signal direction is controlled through PRR0. The signal can be configured as an ESSI signal SC02 through PCR0. This input is 5 V tolerant.

Because of an order from the United States International Trade Commission, BGA-packaged product lines and part numbers indicated here currently are not available from Freescale for import or sale in the United States prior to September 2010: DSP56301

Downloaded from Elcodis.com electronic components distributor

Table 1-12. Enhanced Synchronous Serial Interface 0 (ESSI0) (Continued)

Signal Name	Type	State During Reset	Signal Description
SCK0	Input/Output	Input	**Serial Clock** Provides the serial bit rate clock for the ESSI interface for both the transmitter and receiver in Synchronous modes, or the transmitter only in Asynchronous modes. Although an external serial clock can be independent of and asynchronous to the DSP system clock, it must exceed the minimum clock cycle time of 6 T (that is, the system clock frequency must be at least three times the external ESSI clock frequency). The ESSI needs at least three DSP phases inside each half of the serial clock.
PC3	Input or Output		**Port C 3** The default configuration following reset is GPIO. For PC3, signal direction is controlled through PRR0. The signal can be configured as an ESSI signal SCK0 through PCR0. This input is 5 V tolerant.
SRD0	Input/Output	Input	**Serial Receive Data** Receives serial data and transfers the data to the ESSI receive shift register. SRD0 is an input when data is being received.
PC4	Input or Output		**Port C 4** The default configuration following reset is GPIO. For PC4, signal direction is controlled through PRR0. The signal can be configured as an ESSI signal SRD0 through PCR0. This input is 5 V tolerant.
STD0	Input/Output	Input	**Serial Transmit Data** Transmits data from the serial transmit shift register. STD0 is an output when data is being transmitted.
PC5	Input or Output		**Port C 5** The default configuration following reset is GPIO. For PC5, signal direction is controlled through PRR0. The signal can be configured as an ESSI signal STD0 through PCR0. This input is 5 V tolerant.

Because of an order from the United States International Trade Commission, BGA-packaged product lines and part numbers indicated here currently are not available from Freescale for import or sale in the United States prior to September 2010: DSP56301

Downloaded from Elcodis.com electronic components distributor

1.9 Enhanced Synchronous Serial Interface 1 (ESSI1)

Table 1-13. Enhanced Synchronous Serial Interface 1 (ESSI1)

Signal Name	Type	State During Reset	Signal Description
SC10 PD0	Input or Output	Input	**Serial Control 0** Selection of Synchronous or Asynchronous mode determines function. For Asynchronous mode, this signal is the receive clock I/O (Schmitt-trigger input). For Synchronous mode, this signal is either Transmitter 1 output or Serial I/O Flag 0. **Port D 0** The default configuration following reset is GPIO. For PD0, signal direction is controlled through the Port Directions Register (PRR1). The signal can be configured as an ESSI signal SC10 through the Port Control Register (PCR1). This input is 5 V tolerant.
SC11 PD1	Input/Output Input or Output	Input	**Serial Control 1** Selection of Synchronous or Asynchronous mode determines function. For Asynchronous mode, this signal is the receiver frame sync I/O. For Synchronous mode, this signal is either Transmitter 2 output or Serial I/O Flag 1. **Port D 1** The default configuration following reset is GPIO. For PD1, signal direction is controlled through PRR1. The signal can be configured as an ESSI signal SC11 through PCR1. This input is 5 V tolerant.
SC12 PD2	Input/Output Input or Output	Input	**Serial Control Signal 2** Frame sync for both the transmitter and receiver in Synchronous mode, for the transmitter only in Asynchronous mode. When configured as an output, this signal is the internally generated frame sync signal. When configured as an input, this signal receives an external frame sync signal for the transmitter (and the receiver in Synchronous operation). **Port D 2** The default configuration following reset is GPIO. For PD2, signal direction is controlled through PRR1. The signal can be configured as an ESSI signal SC12 through PCR1. This input is 5 V tolerant.
SCK1 PD3	Input/Output Input or Output	Input	**Serial Clock** Provides the serial bit rate clock for the ESSI interface. Clock input or output can be used by the transmitter and receiver in Synchronous modes, by the transmitter only in Asynchronous modes. Although an external serial clock can be independent of and asynchronous to the DSP system clock, it must exceed the minimum clock cycle time of 6T (that is, the system clock frequency must be at least three times the external ESSI clock frequency). The ESSI needs at least three DSP phases inside each half of the serial clock. **Port D 3** The default configuration following reset is GPIO. For PD3, signal direction is controlled through PRR1. The signal can be configured as an ESSI signal SCK1 through PCR1. This input is 5 V tolerant.

Because of an order from the United States International Trade Commission, BGA-packaged product lines and part numbers indicated here currently are not available from Freescale for import or sale in the United States prior to September 2010: DSP56301

Downloaded from Elcodis.com electronic components distributor

Table 1-13. Enhanced Synchronous Serial Interface 1 (ESSI1) (Continued)

Signal Name	Type	State During Reset	Signal Description
SRD1 PD4	Input/Output Input or Output	Input	**Serial Receive Data** Receives serial data and transfers it to the ESSI receive shift register. SRD1 is an input when data is being received. **Port D 4** The default configuration following reset is GPIO. For PD4, signal direction is controlled through PRR1. The signal can be configured as an ESSI signal SRD1 through PCR1. This input is 5 V tolerant.
STD1 PD5	Input/Output Input or Output	Input	**Serial Transmit Data** Transmits data from the serial transmit shift register. STD1 is an output when data is being transmitted. **Port D 5** The default configuration following reset is GPIO. For PD5, signal direction is controlled through PRR1. The signal can be configured as an ESSI signal STD1 through PCR1. This input is 5 V tolerant.

1.10 Serial Communication Interface (SCI)

The Serial Communication interface (SCI) provides a full duplex port for serial communication with other DSPs, microprocessors, or peripherals such as modems.

Table 1-14. Serial Communication Interface (SCI)

Signal Name	Type	State During Reset	Signal Description
RXD PE0	Input Input or Output	Input	**Serial Receive Data** Receives byte-oriented serial data and transfers it to the SCI receive shift register. **Port E 0** The default configuration following reset is GPIO. When configured as PE0, signal direction is controlled through the SCI Port Directions Register (PRR). The signal can be configured as an SCI signal RXD through the SCI Port Control Register (PCR). This input is 5 V tolerant.
TXD PE1	Output Input or Output	Input	**Serial Transmit Data** Transmits data from SCI transmit data register. **Port E 1** The default configuration following reset is GPIO. When configured as PE1, signal direction is controlled through the SCI PRR. The signal can be configured as an SCI signal TXD through the SCI PCR. This input is 5 V tolerant.

Because of an order from the United States International Trade Commission, BGA-packaged product lines and part numbers indicated here currently are not available from Freescale for import or sale in the United States prior to September 2010: DSP56301

Downloaded from Elcodis.com electronic components distributor

Table 1-14. Serial Communication Interface (SCI) (Continued)

Signal Name	Type	State During Reset	Signal Description
SCLK	Input/Output	Input	**Serial Clock** Provides the input or output clock used by the transmitter and/or the receiver.
PE2	Input or Output		**Port E 2** The default configuration following reset is GPIO. For PE2, signal direction is controlled through the SCI PRR. The signal can be configured as an SCI signal SCLK through the SCI PCR. This input is 5 V tolerant.

1.11 Timers

The DSP56301 has three identical and independent timers. Each can use internal or external clocking, interrupt the DSP56301 after a specified number of events (clocks), or signal an external device after counting a specific number of internal events.

Table 1-15. Triple Timer Signals

Signal Name	Type	State During Reset	Signal Description
TIO0	Input or Output	Input	**Timer 0 Schmitt-Trigger Input/Output** As an external event counter or in Measurement mode, TIO0 is input. In Watchdog, Timer, or Pulse Modulation mode, TIO0 is output. The default mode after reset is GPIO input. This can be changed to output or configured as a Timer Input/Output through the Timer 0 Control/Status Register (TCSR0). This input is 5 V tolerant.
TIO1	Input or Output	Input	**Timer 1 Schmitt-Trigger Input/Output** As an external event counter or in Measurement mode, TIO1 is input. In Watchdog, Timer, or Pulse Modulation mode, TIO1 is output. The default mode after reset is GPIO input. This can be changed to output or configured as a Timer Input/Output through the Timer 1 Control/Status Register (TCSR1). This input is 5 V tolerant.
TIO2	Input or Output	Input	**Timer 2 Schmitt-Trigger Input/Output** As an external event counter or in Measurement mode, TIO2 is input. In Watchdog, Timer, or Pulse Modulation mode, TIO2 is output. The default mode after reset is GPIO input. This can be changed to output or configured as a Timer Input/Output through the Timer 2 Control/Status Register (TCSR2). This input is 5 V tolerant.

Because of an order from the United States International Trade Commission, BGA-packaged product lines and part numbers indicated here currently are not available from Freescale for import or sale in the United States prior to September 2010: DSP56301

Downloaded from Elcodis.com electronic components distributor

1.12 JTAG/OnCE Interface

Table 1-16. JTAG/OnCE Interface

Signal Name	Type	State During Reset	Signal Description
TCK	Input	Input	**Test Clock** A test clock signal for synchronizing JTAG test logic. This input is 5 V tolerant.
TDI	Input	Input	**Test Data Input** A test data serial signal for test instructions and data. TDI is sampled on the rising edge of TCK and has an internal pull-up resistor. This input is 5 V tolerant.
TDO	Output	Tri-stated	**Test Data Output** A test data serial signal for test instructions and data. TDO can be tri-stated. The signal is actively driven in the shift-IR and shift-DR controller states and changes on the falling edge of TCK. This input is 5 V tolerant.
TMS	Input	Input	**Test Mode Select** Sequences the test controller's state machine, is sampled on the rising edge of TCK, and has an internal pull-up resistor. This input is 5 V tolerant.
$\overline{\text{TRST}}$	Input	Input	**Test Reset** Asynchronously initializes the test controller, has an internal pull-up resistor, and must be asserted after power up. This input is 5 V tolerant.
$\overline{\text{DE}}$	Input/Output	Input	**Debug Event** Provides a way to enter Debug mode from an external command controller (as input) or to acknowledge that the chip has entered Debug mode (as output). When asserted as an input, $\overline{\text{DE}}$ causes the DSP56300 core to finish the current instruction, save the instruction pipeline information, enter Debug mode, and wait for commands from the debug serial input line. When a debug request or a breakpoint condition causes the chip to enter Debug mode, $\overline{\text{DE}}$ is asserted as an output for three clock cycles. $\overline{\text{DE}}$ has an internal pull-up resistor. $\overline{\text{DE}}$ is not a standard part of the JTAG Test Access Port (TAP) Controller. It connects to the OnCE module to initiate Debug mode directly or to provide a direct external indication that the chip has entered the Debug mode. All other interface with the OnCE module must occur through the JTAG port. This input is 5 V tolerant.

Because of an order from the United States International Trade Commission, BGA-packaged product lines and part numbers indicated here currently are not available from Freescale for import or sale in the United States prior to September 2010: DSP56301

Downloaded from Elcodis.com electronic components distributor

Because of an order from the United States International Trade Commission, BGA-packaged product lines and part numbers indicated here currently are not available from Freescale for import or sale in the United States prior to September 2010: DSP56301

Downloaded from Elcodis.com electronic components distributor

Specifications 2

The DSP56301 is fabricated in high-density CMOS with Transistor-Transistor Logic (TTL) compatible inputs and outputs.

2.1 Maximum Ratings

CAUTION

This device contains circuitry protecting against damage due to high static voltage or electrical fields; however, normal precautions should be taken to avoid exceeding maximum voltage ratings. Reliability is enhanced if unused inputs are tied to an appropriate logic voltage level (for example, either GND or V_{CC}).

Note: In the calculation of timing requirements, adding a maximum value of one specification to a minimum value of another specification does not yield a reasonable sum. A maximum specification is calculated using a worst case variation of process parameter values in one direction. The minimum specification is calculated using the worst case for the same parameters in the opposite direction. Therefore, a “maximum” value for a specification never occurs in the same device that has a “minimum” value for another specification; adding a maximum to a minimum represents a condition that can never exist.

Because of an order from the United States International Trade Commission, BGA-packaged product lines and part numbers indicated here currently are not available from Freescale for import or sale in the United States prior to September 2010: DSP56301

Downloaded from Elcodis.com electronic components distributor

2.2 Absolute Maximum Ratings

Table 2-1. Maximum Ratings

Rating[1]	Symbol	Value[1, 2]	Unit
Supply Voltage	V_{CC}	–0.3 to +4.0	V
All input voltages excluding “5 V tolerant” inputs[3]	V_{IN}	GND – 0.3 to V_{CC} + 0.3	V
All “5 V tolerant” input voltages[3]	V_{IN5}	GND – 0.3 to V_{CC} + 3.95	V
Current drain per pin excluding V_{CC} and GND	I	10	mA
Operating temperature range	T_J	–40 to +100	°C
Storage temperature	T_{STG}	–55 to +150	°C

Notes:
1. GND = 0 V, V_{CC} = 3.3 V ± 0.3 V, T_J = –40°C to +100°C, CL = 50 pF
2. Absolute maximum ratings are stress ratings only, and functional operation at the maximum is not guaranteed. Stress beyond the maximum rating may affect device reliability or cause permanent damage to the device.
3. **CAUTION**: All “5 V Tolerant” input voltages cannot be more than 3.95 V greater than the supply voltage; this restriction applies to “power on,” as well as during normal operation. In any case, the input voltages must not be higher than 5.75 V. “5 V Tolerant” inputs are inputs that tolerate 5 V.

2.3 Thermal Characteristics

Table 2-2. Thermal Characteristics

Characteristic	Symbol	TQFP Value	PBGA[3] Value	PBGA[4] Value	Unit
Junction-to-ambient thermal resistance[1]	$R_{\theta JA}$ or θ_{JA}	49.5	48.4	25.2	°C/W
Junction-to-case thermal resistance[2]	$R_{\theta JC}$ or θ_{JC}	7.2	9	—	°C/W
Thermal characterization parameter	Ψ_{JT}	4.7	5	—	°C/W

Notes:
1. Junction-to-ambient thermal resistance is based on measurements on a horizontal single-sided printed circuit board per JEDEC Specification JESD51-3.
2. Junction-to-case thermal resistance is based on measurements using a cold plate per SEMI G30-88, with the exception that the cold plate temperature is used for the case temperature.
3. These are simulated values. See note 1 for test board conditions.
4. These are simulated values. The test board has two 2-ounce signal layers and two 1-ounce solid ground planes internal to the test board.

2.4 DC Electrical Characteristics

Table 2-3. DC Electrical Characteristics[6]

Characteristics	Symbol	Min	Typ	Max	Unit
Supply voltage	V_{CC}	3.0	3.3	3.6	V

Because of an order from the United States International Trade Commission, BGA-packaged product lines and part numbers indicated here currently are not available from Freescale for import or sale in the United States prior to September 2010: DSP56301

Downloaded from Elcodis.com electronic components distributor

Table 2-3. DC Electrical Characteristics[6] (Continued)

Characteristics	Symbol	Min	Typ		Max	Unit
Input high voltage • D[0–23], $\overline{BG}$, $\overline{BB}$, $\overline{TA}$ • MOD[1]/$\overline{IRQ}$[1], $\overline{RESET}$, PINIT/$\overline{NMI}$ and all JTAG/ESSI/SCI/Timer/HI32 pins • EXTAL[8]	 V_{IH} V_{IHP} V_{IHX}	 2.0 2.0 $0.8 \times V_{CC}$	 — — —		 V_{CC} 5.25 V_{CC}	 V V V
Input low voltage • D[0–23], $\overline{BG}$, $\overline{BB}$, $\overline{TA}$, MOD[1]/$\overline{IRQ}$[1], $\overline{RESET}$, PINIT • All JTAG/ESSI/SCI/Timer/HI32 pins • EXTAL[8]	 V_{IL} V_{ILP} V_{ILX}	 –0.3 –0.3 –0.3	 — — —		 0.8 0.8 $0.2 \times V_{CC}$	 V V V
Input leakage current	I_{IN}	–10	—		10	µA
High impedance (off-state) input current (@ 2.4 V / 0.4 V)	I_{TSI}	–10	—		10	µA
Output high voltage • TTL (I_{OH} = –0.4 mA)[5,7] • CMOS (I_{OH} = –10 µA)[5]	V_{OH}	 2.4 V_{CC} – 0.01	 — —		 — —	 V V
Output low voltage • TTL (I_{OL} = 1.6 mA, open-drain pins I_{OL} = 6.7 mA)[5,7] • CMOS (I_{OL} = 10 µA)[5]	V_{OL}	 — —	 — —		 0.4 0.01	 V V
Internal supply current[2]: • In Normal mode • In Wait mode[3] • In Stop mode[4]	 I_{CCI} I_{CCW} I_{CCS}	 — — —	**80 MHz** 102 6 100	**100 MHz** 127 7.5 100	 — — —	 mA mA µA
PLL supply current		—	1		2.5	mA
Input capacitance[5]	C_{IN}	—	—		10	pF

Notes:
1. Refers to MODA/$\overline{IRQA}$, MODB/$\overline{IRQB}$, MODC/$\overline{IRQC}$, and MODD/$\overline{IRQD}$ pins.
2. **Power Consumption Considerations** on page 4-3 provides a formula to compute the estimated current requirements in Normal mode. To obtain these results, all inputs must be terminated (that is, not allowed to float). Measurements are based on synthetic intensive DSP benchmarks (see **Appendix A**). The power consumption numbers in this specification are 90 percent of the measured results of this benchmark. This reflects typical DSP applications. Typical internal supply current is measured with V_{CC} = 3.0 V at T_J = 100°C.
3. To obtain these results, all inputs must be terminated (that is, not allowed to float).
4. To obtain these results, all inputs that are not disconnected at Stop mode must be terminated (that is, not allowed to float). PLL and XTAL signals are disabled during Stop state.
5. Periodically sampled and not 100 percent tested.
6. V_{CC} = 3.3 V ± 0.3 V; T_J = –40°C to +100 °C, C_L = 50 pF
7. This characteristic does not apply to XTAL and PCAP.
8. Driving EXTAL to the low V_{IHX} or the high V_{ILX} value may cause additional power consumption (DC current). To minimize power consumption, the minimum V_{IHX} should be no lower than $0.9 \times V_{CC}$ and the maximum V_{ILX} should be no higher than $0.1 \times V_{CC}$.

Because of an order from the United States International Trade Commission, BGA-packaged product lines and part numbers indicated here currently are not available from Freescale for import or sale in the United States prior to September 2010: DSP56301

Downloaded from Elcodis.com electronic components distributor

2.5 AC Electrical Characteristics

The timing waveforms shown in the AC electrical characteristics section are tested with a V_{IL} maximum of 0.3 V and a V_{IH} minimum of 2.4 V for all pins except EXTAL, which is tested using the input levels shown in Note 6 of **Table 2-3**. AC timing specifications, which are referenced to a device input signal, are measured in production with respect to the 50 percent point of the respective input signal's transition.

Note: Although the minimum value for the frequency of EXTAL is 0 MHz, the device AC test conditions are 15 MHz and rated speed.

All specifications for the high impedance state are guaranteed by design.

2.5.1 Internal Clocks

Table 2-4. Internal Clocks, CLKOUT

Characteristics	Symbol	Expression[1, 2]		
		Min	Typ	Max
Internal operation frequency and CLKOUT with PLL enabled	f	—	(Ef × MF)/ (PDF × DF)	—
Internal operation frequency and CLKOUT with PLL disabled	f	—	Ef/2	—
Internal clock and CLKOUT high period • With PLL disabled • With PLL enabled and MF ≤ 4 • With PLL enabled and MF > 4	T_H	— 0.49 × ET_C × PDF × DF/MF 0.47 × ET_C × PDF × DF/MF	ET_C — —	— 0.51 × ET_C × PDF × DF/MF 0.53 × ET_C × PDF × DF/MF
Internal clock and CLKOUT low period • With PLL disabled • With PLL enabled and MF ≤ 4 • With PLL enabled and MF > 4	T_L	— 0.49 × ET_C × PDF × DF/MF 0.47 × ET_C × PDF × DF/MF	ET_C — —	— 0.51 × ET_C × PDF × DF/MF 0.53 × ET_C × PDF × DF/MF
Internal clock and CLKOUT cycle time with PLL enabled	T_C	—	ET_C × PDF × DF/MF	—
Internal clock and CLKOUT cycle time with PLL disabled	T_C	—	2 × ET_C	—
Instruction cycle time	I_{CYC}	—	T_C	—

Notes: 1. DF = Division Factor; Ef = External frequency; ET_C = External clock cycle = 1/Ef; MF = Multiplication Factor; PDF = Predivision Factor; T_C = Internal clock cycle
2. See the PLL and Clock Generator section in the *DSP56300 Family Manual* for details on the PLL.

Because of an order from the United States International Trade Commission, BGA-packaged product lines and part numbers indicated here currently are not available from Freescale for import or sale in the United States prior to September 2010: DSP56301

Downloaded from Elcodis.com electronic components distributor

2.5.2 External Clock Operation

The DSP56301 system clock is derived from the on-chip oscillator or it is externally supplied. To use the on-chip oscillator, connect a crystal and associated resistor/capacitor components to EXTAL and XTAL; examples are shown in **Figure 2-1**.

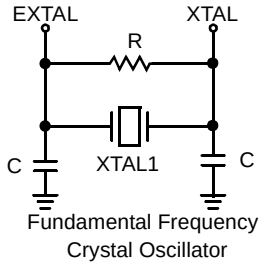

Note: Make sure that in the PCTL Register:
- XTLD (bit 16) = 0
- If f_{OSC} > 200 kHz, XTLR (bit 15) = 0

Suggested Component Values:

f_{OSC} = 4 MHz	f_{OSC} = 20 MHz
R = 680 kΩ ± 10%	R = 680 kΩ ± 10%
C = 56 pF ± 20%	C = 22 pF ± 20%

Calculations were done for a 4/20 MHz crystal with the following parameters:
- C_L of 30/20 pF,
- C_0 of 7/6 pF,
- series resistance of 100/20 Ω, and
- drive level of 2 mW.

Figure 2-1. Crystal Oscillator Circuits

If an externally supplied square wave voltage source is used, disable the internal oscillator circuit during boot-up by setting XTLD (PCTL Register bit 16 = 1—see the *DSP56301 User's Manual*). The external square wave source connects to EXTAL; XTAL is not physically connected to the board or socket. **Figure 2-2** shows the relationship between the EXTAL input and the internal clock and CLKOUT.

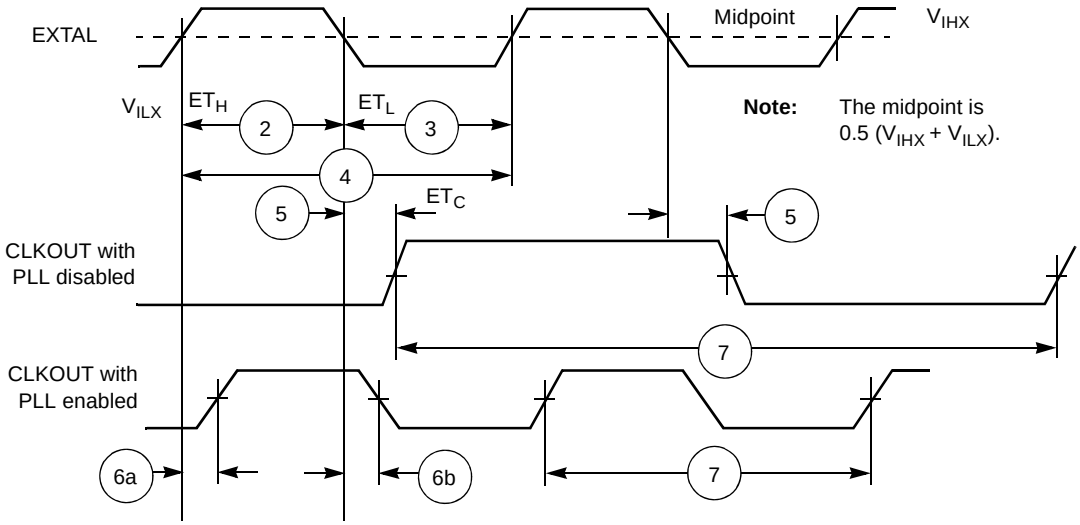

Figure 2-2. External Clock Timing

Because of an order from the United States International Trade Commission, BGA-packaged product lines and part numbers indicated here currently are not available from Freescale for import or sale in the United States prior to September 2010: DSP56301

Downloaded from Elcodis.com electronic components distributor

Table 2-5. Clock Operation

No.	Characteristics	Symbol	80 MHz		100 MHz	
			Min	Max	Min	Max
1	Frequency of EXTAL (EXTAL Pin Frequency) The rise and fall time of this external clock should be 3 ns maximum.	Ef	0	80.0 MHz	0	100.0 MHz
2	EXTAL input high[1, 2] • With PLL disabled (46.7%–53.3% duty cycle[6]) • With PLL enabled (42.5%–57.5% duty cycle[6])	ET_H	5.84 ns 5.31 ns	∞ 157.0 µs	4.67 ns 4.25 ns	∞ 157.0 µs
3	EXTAL input low[1, 2] • With PLL disabled (46.7%–53.3% duty cycle[6]) • With PLL enabled (42.5%–57.5% duty cycle[6])	ET_L	5.84 ns 5.31 ns	∞ 157.0 µs	4.67 ns 4.25 ns	∞ 157.0 µs
4	EXTAL cycle time[2] • With PLL disabled • With PLL enabled	ET_C	12.50 ns 12.50 ns	∞ 273.1 µs	10.00 ns 10.00 ns	∞ 273.1 µs
5	CLKOUT change from EXTAL fall with PLL disabled		4.3 ns	11.0 ns	4.3 ns	11.0 ns
6	a. CLKOUT rising edge from EXTAL rising edge with PLL enabled (MF = 1 or 2 or 4, PDF = 1, Ef > 15 MHz)[3,5] b. CLKOUT falling edge from EXTAL falling edge with PLL enabled (MF ≤ 4, PDF ≠ 1, Ef / PDF > 15 MHz)[3,5]		0.0 ns 0.0 ns	1.8 ns 1.8 ns	0.0 ns 0.0 ns	1.8 ns 1.8 ns
7	Instruction cycle time = I_{CYC} = T_C[4] (see **Table 2-4**) (46.7%–53.3% duty cycle) • With PLL disabled • With PLL enabled	I_{CYC}	25.0 ns 12.50 ns	∞ 8.53 µs	20.0 ns 10.00 ns	∞ 8.53 µs

Notes:
1. Measured at 50 percent of the input transition
2. The maximum value for PLL enabled is given for minimum VCO frequency (see **Table 2-6**) and maximum MF.
3. Periodically sampled and not 100 percent tested
4. The maximum value for PLL enabled is given for minimum VCO frequency and maximum DF.
5. The skew is not guaranteed for any other MF value.
6. The indicated duty cycle is for the specified maximum frequency for which a part is rated. The minimum clock high or low time required for correction operation, however, remains the same at lower operating frequencies; therefore, when a lower clock frequency is used, the signal symmetry may vary from the specified duty cycle as long as the minimum high time and low time requirements are met.

2.5.3 Phase Lock Loop (PLL) Characteristics

Table 2-6. PLL Characteristics

Characteristics	80 MHz		100 MHz		Unit
	Min	Max	Min	Max	
Voltage Controlled Oscillator (VCO) frequency when PLL enabled (MF × E_f × 2/PDF)	30	160	30	200	MHz
PLL external capacitor (PCAP pin to V_{CCP}) (C_{PCAP}) • @ MF ≤ 4 • @ MF > 4	 (MF × 580) – 100 MF × 830	 (MF × 780) – 140 MF × 1470	 (MF × 580) – 100 MF × 830	 (MF × 780) – 140 MF × 1470	 pF pF

Note: C_{PCAP} is the value of the PLL capacitor (connected between the PCAP pin and V_{CCP}). The recommended value in pF for C_{PCAP} can be computed from one of the following equations:
(680 × MF) – 120, for MF ≤ 4, or
1100 × MF, for MF > 4.

Because of an order from the United States International Trade Commission, BGA-packaged product lines and part numbers indicated here currently are not available from Freescale for import or sale in the United States prior to September 2010: DSP56301

Downloaded from Elcodis.com electronic components distributor

2.5.4 Reset, Stop, Mode Select, and Interrupt Timing

Table 2-7. Reset, Stop, Mode Select, and Interrupt Timing[6]

No.	Characteristics	Expression	80 MHz		100 MHz		Unit
			Min	Max	Min	Max	
8	Delay from $\overline{\text{RESET}}$ assertion to all pins at reset value[3]	—	—	26.0	—	26.0	ns
9	Required $\overline{\text{RESET}}$ duration[4]						
	• Power on, external clock generator, PLL disabled	$50 \times ET_C$	625.0	—	500.0	—	ns
	• Power on, external clock generator, PLL enabled	$1000 \times ET_C$	12.5	—	10.0	—	µs
	• Power on, internal oscillator	$75000 \times ET_C$	1.0	—	0.75	—	ms
	• During STOP, XTAL disabled (PCTL Bit 16 = 0)	$75000 \times ET_C$	1.0	—	0.75	—	ms
	• During STOP, XTAL enabled (PCTL Bit 16 = 1)	$2.5 \times T_C$	31.3	—	25.0	—	ns
	• During normal operation	$2.5 \times T_C$	31.3	—	25.0	—	ns
10	Delay from asynchronous $\overline{\text{RESET}}$ deassertion to first external address output (internal reset deassertion)[5]						
	• Minimum	$3.25 \times T_C + 2.0$	42.6	—	34.5	—	ns
	• Maximum	$20.25\ T_C + 10.0$	—	263.1	—	212.5	ns
11	Synchronous reset setup time from $\overline{\text{RESET}}$ deassertion to CLKOUT Transition 1	T_C					
	• Minimum		7.4	—	5.9	—	ns
	• Maximum		—	12.5	—	10.0	ns
12	Synchronous reset deasserted, delay time from the CLKOUT Transition 1 to the first external address output						
	• Minimum	$3.25 \times T_C + 1.0$	41.6	—	33.5	—	ns
	• Maximum	$20.25 \times T_C + 1.0$	—	258.1	—	207.5	ns
13	Mode select setup time		30.0	—	30.0	—	ns
14	Mode select hold time		0.0	—	0.0	—	ns
15	Minimum edge-triggered interrupt request assertion width		8.25	—	6.6	—	ns
16	Minimum edge-triggered interrupt request deassertion width		8.25	—	7.1	—	ns
17	Delay from $\overline{\text{IRQA}}$, $\overline{\text{IRQB}}$, $\overline{\text{IRQC}}$, $\overline{\text{IRQD}}$, $\overline{\text{NMI}}$ assertion to external memory access address out valid						
	• Caused by first interrupt instruction fetch	$4.25 \times T_C + 2.0$	55.1	—	44.5	—	ns
	• Caused by first interrupt instruction execution	$7.25 \times T_C + 2.0$	92.6	—	74.5	—	ns
18	Delay from $\overline{\text{IRQA}}$, $\overline{\text{IRQB}}$, $\overline{\text{IRQC}}$, $\overline{\text{IRQD}}$, $\overline{\text{NMI}}$ assertion to general-purpose transfer output valid caused by first interrupt instruction execution	$10 \times T_C + 5.0$	130.0	—	105.0	—	ns
19	Delay from address output valid caused by first interrupt instruction execute to interrupt request deassertion for level sensitive fast interrupts[1]	**80 MHz**: $3.75 \times T_C + WS \times T_C - 12.4$	—	Note 8			ns
		100 MHz: $3.75 \times T_C + WS \times T_C - 10.94$			—	Note 8	ns
20	Delay from $\overline{\text{RD}}$ assertion to interrupt request deassertion for level sensitive fast interrupts[1]	**80 MHz**: $3.25 \times T_C + WS \times T_C - 12.4$	—	Note 8			ns
		100 MHz: $3.25 \times T_C + WS \times T_C - 10.94$			—	Note 8	ns

Because of an order from the United States International Trade Commission, BGA-packaged product lines and part numbers indicated here currently are not available from Freescale for import or sale in the United States prior to September 2010: DSP56301

Downloaded from Elcodis.com electronic components distributor

Table 2-7. Reset, Stop, Mode Select, and Interrupt Timing[6] (Continued)

No.	Characteristics	Expression	80 MHz		100 MHz		Unit
			Min	Max	Min	Max	
21	Delay from $\overline{WR}$ assertion to interrupt request deassertion for level sensitive fast interrupts[1]						
	• DRAM for all WS[7]	**80 MHz**: (WS + 3.5) × T_C – 12.4	—	Note 8			ns
		100 MHz: (WS + 3.5) × T_C – 10.94			—	Note 8	ns
	• SRAM WS = 1	**80 MHz**: (WS + 3.5) × T_C – 12.4	—	Note 8			ns
		100 MHz: (WS + 3.5) × T_C – 10.94			—	Note 8	ns
	• SRAM WS = 2, 3	**80 MHz**: (WS + 3) × T_C – 12.4	—	Note 8			ns
		100 MHz: (WS + 3) × T_C – 10.94			—	Note 8	ns
	• SRAM WS ≥ 4	**80 MHz**: (WS + 2.5) × T_C – 12.4	—	Note 8			ns
		100 MHz: (WS + 2.5) × T_C – 10.94			—	Note 8	ns
22	Synchronous interrupt setup time from $\overline{IRQA}$, $\overline{IRQB}$, $\overline{IRQC}$, $\overline{IRQD}$, $\overline{NMI}$ assertion to the CLKOUT Transition 2		7.4	T_C	5.9	T_C	ns
23	Synchronous interrupt delay time from the CLKOUT Transition 2 to the first external address output valid caused by the first instruction fetch after coming out of Wait Processing state						
	• Minimum	8.25 × T_C + 1.0	116.6	—	83.5	—	ns
	• Maximum	24.75 × T_C + 5.0	—	314.4	—	252.5	ns
24	Duration for $\overline{IRQA}$ assertion to recover from Stop state		7.4	—	5.9	—	ns
25	Delay from $\overline{IRQA}$ assertion to fetch of first instruction (when exiting Stop)[2, 3]						
	• PLL is not active during Stop (PCTL Bit 17 = 0) and Stop delay is enabled (Operating Mode Register Bit 6 = 0)	PLC × ET_C × PDF + (128 K – PLC/2) × T_C	1.6	17.0	1.3	13.6	ms
	• PLL is not active during Stop (PCTL Bit 17 = 0) and Stop delay is not enabled (Operating Mode Register Bit 6 = 1)	PLC × ET_C × PDF + (23.75 ± 0.5) × T_C	290.6 ns	15.4 ms	232.5 ns	12.3 ms	
	• PLL is active during Stop (PCTL Bit 17 = 1) (Implies No Stop Delay)	(9.25 ± 0.5) × TC	109.4	121.9	87.5	97.5	ns
26	Duration of level sensitive $\overline{IRQA}$ assertion to ensure interrupt service (when exiting Stop)[2, 3]						
	• PLL is not active during Stop (PCTL Bit 17 = 0) and Stop delay is enabled (Operating Mode Register Bit 6 = 0)	PLC × ET_C × PDF + (128K – PLC/2) × T_C	17.0	—	13.6	—	ms
	• PLL is not active during Stop (PCTL Bit 17 = 0) and Stop delay is not enabled (Operating Mode Register Bit 6 = 1)	PLC × ET_C × PDF + (20.5 ± 0.5) × T_C	15.4	—	12.3	—	ms
	• PLL is active during Stop (PCTL Bit 17 = 1) (implies no Stop delay)	5.5 × T_C	68.8	—	55.0	—	ns
27	Interrupt Request Rate						
	• HI32, ESSI, SCI, Timer	12 × T_C	—	150.0	—	120.0	ns
	• DMA	8 × T_C	—	100.0	—	80.0	ns
	• $\overline{IRQ}$, $\overline{NMI}$ (edge trigger)	8 × T_C	—	100.0	—	80.0	ns
	• $\overline{IRQ}$, $\overline{NMI}$ (level trigger)	12 × T_C	—	150.0	—	120.0	ns

Because of an order from the United States International Trade Commission, BGA-packaged product lines and part numbers indicated here currently are not available from Freescale for import or sale in the United States prior to September 2010: DSP56301

Downloaded from Elcodis.com electronic components distributor

Table 2-7. Reset, Stop, Mode Select, and Interrupt Timing[6] (Continued)

No.	Characteristics	Expression	80 MHz		100 MHz		Unit
			Min	Max	Min	Max	
28	DMA Request Rate						
	• Data read from HI32, ESSI, SCI	$6 \times T_C$	—	75.0	—	60.0	ns
	• Data write to HI32, ESSI, SCI	$7 \times T_C$	—	87.5	—	70.0	ns
	• Timer	$2 \times T_C$	—	25.0	—	20.0	ns
	• $\overline{IRQ}$, $\overline{NMI}$ (edge trigger)	$3 \times T_C$	—	37.5	—	30.0	ns
29	Delay from $\overline{IRQA}$, $\overline{IRQB}$, $\overline{IRQC}$, $\overline{IRQD}$, $\overline{NMI}$ assertion to external memory (DMA source) access address out valid	$4.25 \times T_C + 2.0$	55.1	—	44.5	—	ns

Notes:

1. When using fast interrupts and $\overline{IRQA}$, $\overline{IRQB}$, $\overline{IRQC}$, and $\overline{IRQD}$ are defined as level-sensitive, timings 19 through 21 apply to prevent multiple interrupt service. To avoid these timing restrictions, the deasserted Edge-triggered mode is recommended when using fast interrupts. Long interrupts are recommended when using Level-sensitive mode.
2. This timing depends on several settings:
   • For PLL disable, using internal oscillator (PLL Control Register (PCTL) Bit 16 = 0) and oscillator disabled during Stop (PCTL Bit 17 = 0), a stabilization delay is required to assure that the oscillator is stable before programs are executed. Resetting the Stop delay (Operating Mode Register Bit 6 = 0) provides the proper delay. While Operating Mode Register Bit 6 = 1 can be set, it is not recommended, and these specifications do not guarantee timings for that case.
   • For PLL disable, using internal oscillator (PCTL Bit 16 = 0) and oscillator enabled during Stop (PCTL Bit 17=1), no stabilization delay is required and recovery is minimal (Operating Mode Register Bit 6 setting is ignored).
   • For PLL disable, using external clock (PCTL Bit 16 = 1), no stabilization delay is required and recovery time is defined by the PCTL Bit 17 and Operating Mode Register Bit 6 settings.
   • For PLL enable, if PCTL Bit 17 is 0, the PLL is shutdown during Stop. Recovering from Stop requires the PLL to get locked. The PLL lock procedure duration, PLL Lock Cycles (PLC), may be in the range of 0 to 1000 cycles. This procedure occurs in parallel with the stop delay counter, and stop recovery ends when the last of these two events occurs. The stop delay counter completes count or PLL lock procedure completion.
   • PLC value for PLL disable is 0.
   • The maximum value for ET_C is 4096 (maximum MF) divided by the desired internal frequency (that is, for 66 MHz it is 4096/66 MHz = 62 µs). During the stabilization period, T_C, T_H, and T_L is not constant, and their width may vary, so timing may vary as well.
3. Periodically sampled and not 100 percent tested.
4. Value depends on clock source:
   • For an external clock generator, $\overline{RESET}$ duration is measured while $\overline{RESET}$ is asserted, V_{CC} is valid, and the EXTAL input is active and valid.
   • For an internal oscillator, $\overline{RESET}$ duration is measured while $\overline{RESET}$ is asserted and V_{CC} is valid. The specified timing reflects the crystal oscillator stabilization time after power-up. This number is affected both by the specifications of the crystal and other components connected to the oscillator and reflects worst case conditions.
   • When the V_{CC} is valid, but the other "required $\overline{RESET}$ duration" conditions (as specified above) have not been yet met, the device circuitry is in an uninitialized state that can result in significant power consumption and heat-up. Designs should minimize this state to the shortest possible duration.
5. If PLL does not lose lock.
6. V_{CC} = 3.3 V ± 0.3 V; T_J = –40°C to +100°C, C_L = 50 pF.
7. WS = number of wait states (measured in clock cycles, number of T_C).
8. Use the expression to compute a maximum value.

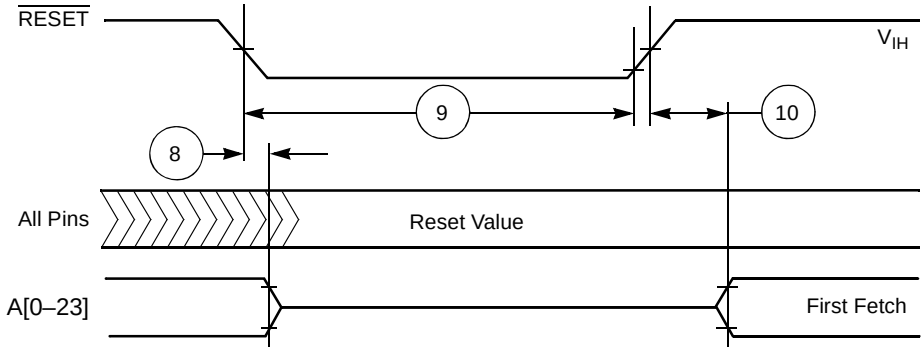

Figure 2-3. Reset Timing

Because of an order from the United States International Trade Commission, BGA-packaged product lines and part numbers indicated here currently are not available from Freescale for import or sale in the United States prior to September 2010: DSP56301

Downloaded from Elcodis.com electronic components distributor

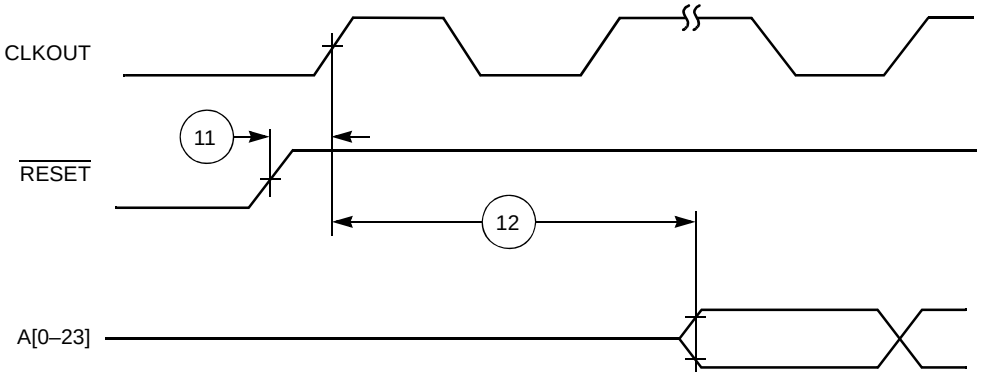

Figure 2-4. Synchronous Reset Timing

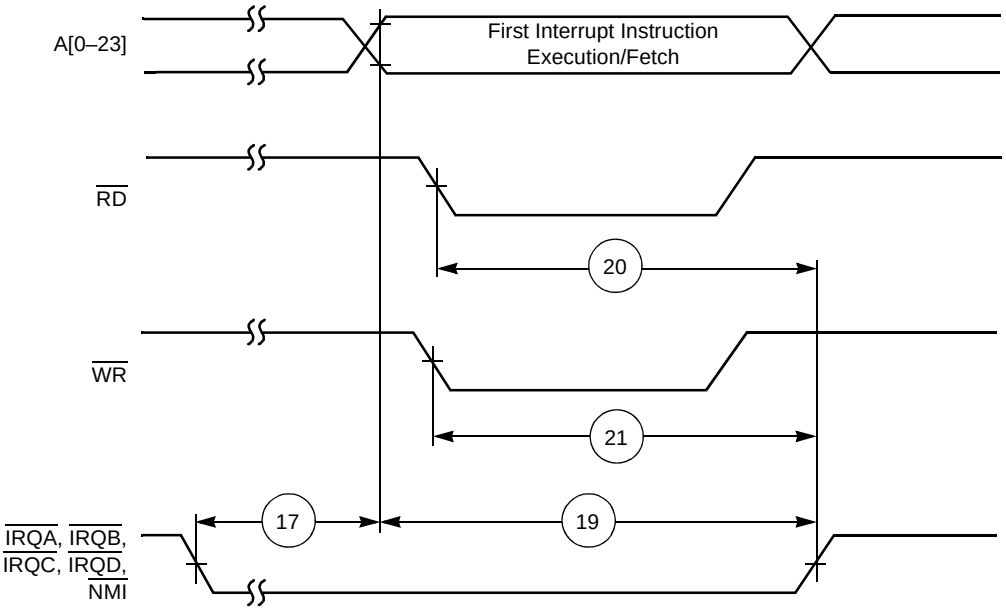

a) First Interrupt Instruction Execution

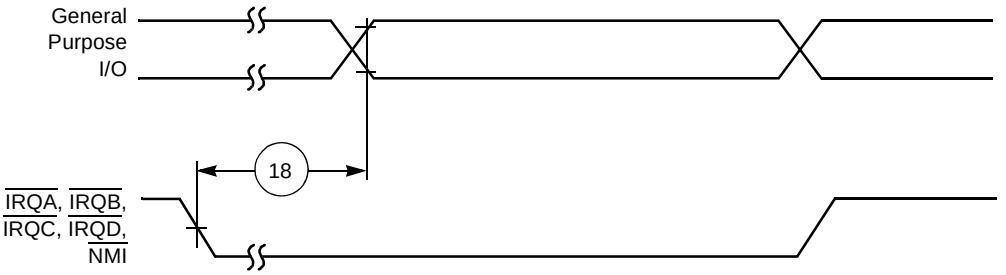

b) General-Purpose I/O

Figure 2-5. External Fast Interrupt Timing

Because of an order from the United States International Trade Commission, BGA-packaged product lines and part numbers indicated here currently are not available from Freescale for import or sale in the United States prior to September 2010: DSP56301

Downloaded from Elcodis.com electronic components distributor

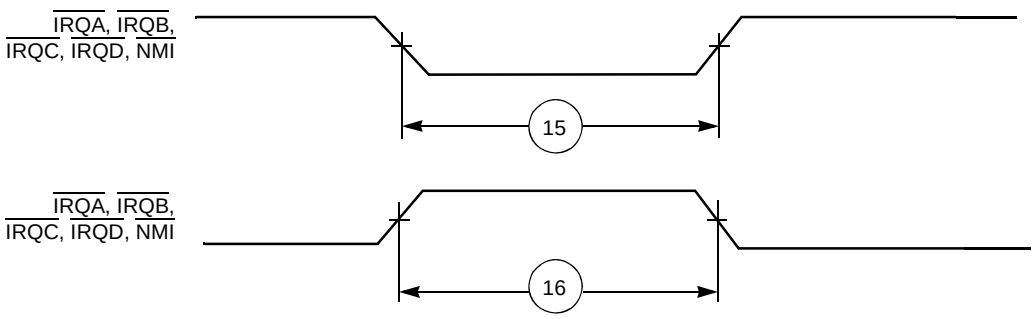

Figure 2-6. External Interrupt Timing (Negative Edge-Triggered)

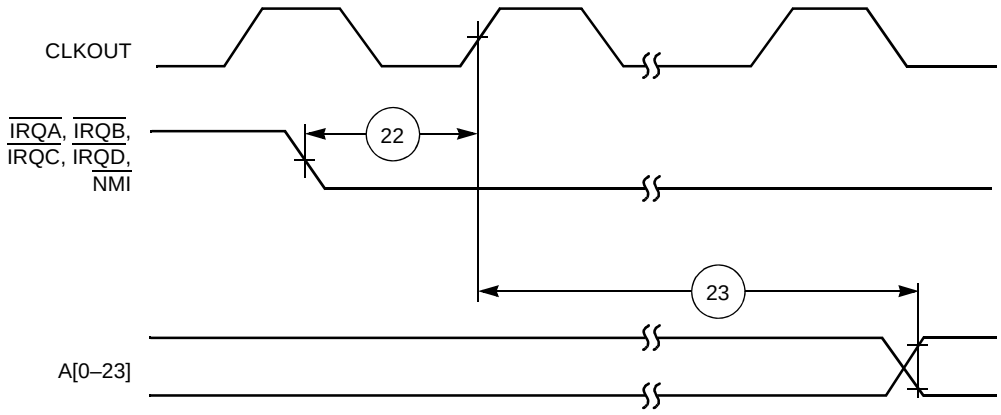

Figure 2-7. Synchronous Interrupt from Wait State Timing

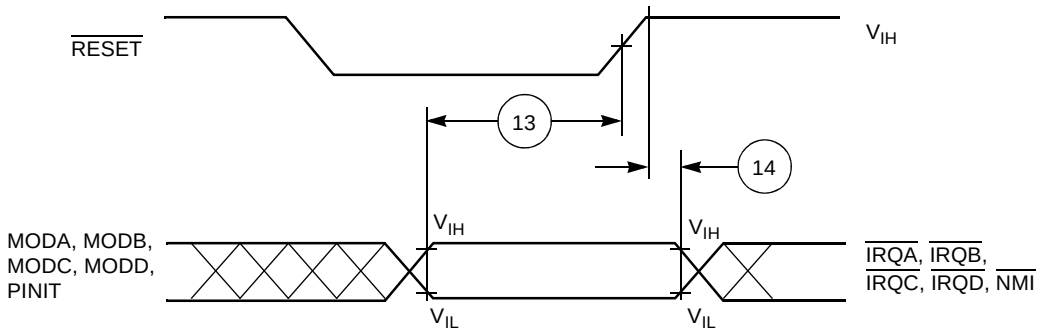

Figure 2-8. Operating Mode Select Timing

Because of an order from the United States International Trade Commission, BGA-packaged product lines and part numbers indicated here currently are not available from Freescale for import or sale in the United States prior to September 2010: DSP56301

Downloaded from Elcodis.com electronic components distributor

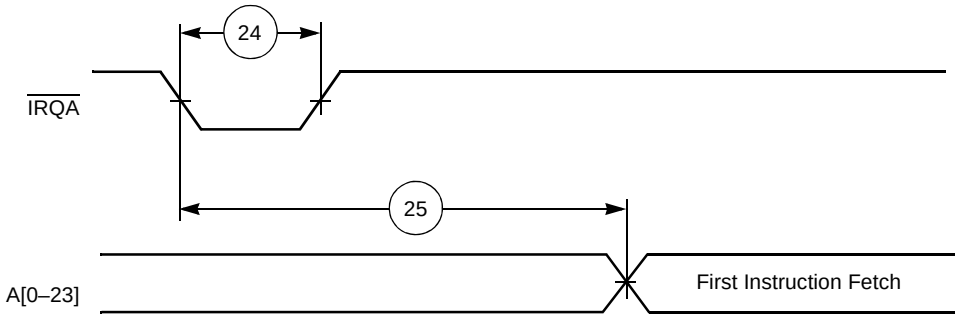

Figure 2-9. Recovery from Stop State Using $\overline{\text{IRQA}}$

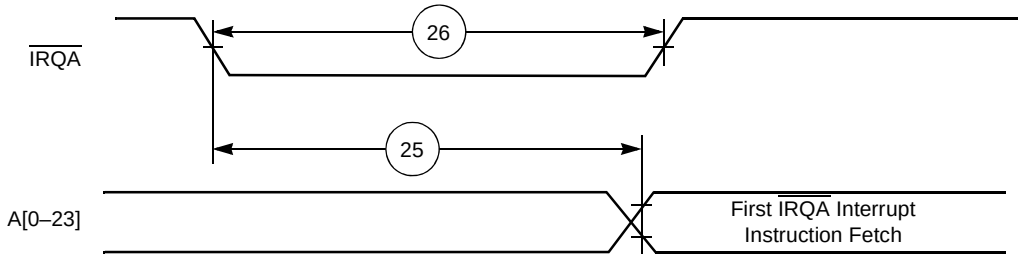

Figure 2-10. Recovery from Stop State Using $\overline{\text{IRQA}}$ Interrupt Service

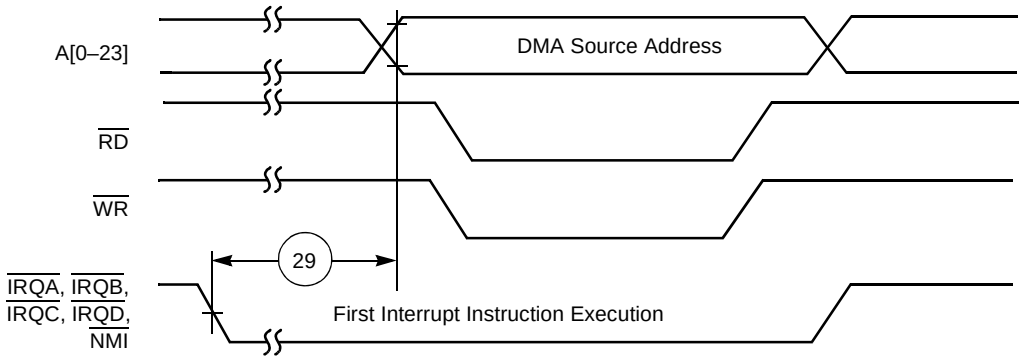

Figure 2-11. External Memory Access (DMA Source) Timing

2.5.5 External Memory Expansion Port (Port A)

Because of an order from the United States International Trade Commission, BGA-packaged product lines and part numbers indicated here currently are not available from Freescale for import or sale in the United States prior to September 2010: DSP56301

Downloaded from Elcodis.com electronic components distributor

2.5.5.1 SRAM Timing

Table 2-8. SRAM Read and Write Accesses[3,6]

No.	Characteristics	Symbol	Expression[1]	80 MHz		100 MHz		Unit
				Min	Max	Min	Max	
100	Address valid and AA assertion pulse width[2]	t_{RC}, t_{WC}	$(WS + 1) \times T_C - 4.0$ [$1 \le WS \le 3$] $(WS + 2) \times T_C - 4.0$ [$4 \le WS \le 7$] $(WS + 3) \times T_C - 4.0$ [$WS \ge 8$]	21.0 71.0 133.5	— — —	16.0 56.0 106.0	— — —	ns ns ns
101	Address and AA valid to $\overline{WR}$ assertion	t_{AS}	$0.25 \times T_C - 2.0$ [$WS = 1$] $0.75 \times T_C - 2.0$ [$2 \le WS \le 3$] $1.25 \times T_C - 2.0$ [$WS \ge 4$]	1.1 7.4 13.6	— — —	0.5 5.5 10.5	— — —	ns ns ns
102	$\overline{WR}$ assertion pulse width	t_{WP}	$1.5 \times T_C - 4.0$ [$WS = 1$] $WS \times T_C - 4.0$ [$2 \le WS \le 3$] $(WS - 0.5) \times T_C - 4.0$ [$WS \ge 4$]	14.8 21.0 39.8	— — —	11.0 16.0 31.0	— — —	ns ns ns
103	$\overline{WR}$ deassertion to address not valid	t_{WR}	$0.25 \times T_C - 2.0$ [$1 \le WS \le 3$] $1.25 \times T_C - 4.0$ [$4 \le WS \le 7$] $2.25 \times T_C - 4.0$ [$WS \ge 8$]	1.1 11.6 24.1	— — —	0.5 8.5 18.5	— — —	ns ns ns
104	Address and AA valid to input data valid	t_{AA}, t_{AC}	$(WS + 0.75) \times T_C - 5.0$ [$WS \ge 1$]	—	16.9	—	12.5	ns
105	$\overline{RD}$ assertion to input data valid	t_{OE}	$(WS + 0.25) \times T_C - 5.0$ [$WS \ge 1$]	—	10.6	—	7.5	ns
106	$\overline{RD}$ deassertion to data not valid (data hold time)	t_{OHZ}		0.0	—	0.0	—	ns
107	Address valid to $\overline{WR}$ deassertion[2]	t_{AW}	$(WS + 0.75) \times T_C - 4.0$ [$WS \ge 1$]	17.9	—	13.5	—	ns
108	Data valid to $\overline{WR}$ deassertion (data setup time)	t_{DS} (t_{DW})	$(WS - 0.25) \times T_C - 3.0$ [$WS \ge 1$]	6.4	—	4.5	—	ns
109	Data hold time from $\overline{WR}$ deassertion	t_{DH}	$0.25 \times T_C - 2.0$ [$1 \le WS \le 3$] $1.25 \times T_C - 2.0$ [$4 \le WS \le 7$] $2.25 \times T_C - 2.0$ [$WS \ge 8$]	1.1 13.6 26.1	— — —	0.5 10.5 20.5	— — —	ns ns ns
110	$\overline{WR}$ assertion to data active		$0.75 \times T_C - 3.7$ [$WS = 1$] $0.25 \times T_C - 3.7$ [$2 \le WS \le 3$] $-0.25 \times T_C - 3.7$ [$WS \ge 4$]	5.7 –0.6 –6.8	— — —	3.8 –1.2 –6.2	— — —	ns ns ns
111	$\overline{WR}$ deassertion to data high impedance		$0.25 \times T_C + 0.2$ [$1 \le WS \le 3$] $1.25 \times T_C + 0.2$ [$4 \le WS \le 7$] $2.25 \times T_C + 0.2$ [$WS \ge 8$]	— — —	3.3 15.8 28.3	— — —	2.7 12.7 22.7	ns ns ns
112	Previous $\overline{RD}$ deassertion to data active (write)		$1.25 \times T_C - 4.0$ [$1 \le WS \le 3$] $2.25 \times T_C - 4.0$ [$4 \le WS \le 7$] $3.25 \times T_C - 4.0$ [$WS \ge 8$]	11.6 24.1 36.6	— — —	8.5 18.5 28.5	— — —	ns ns ns
113	$\overline{RD}$ deassertion time		$0.75 \times T_C - 4.0$ [$1 \le WS \le 3$] $1.75 \times T_C - 4.0$ [$4 \le WS \le 7$] $2.75 \times T_C - 4.0$ [$WS \ge 8$]	5.4 17.9 30.4	— — —	3.5 13.5 23.5	— — —	ns ns ns
114	$\overline{WR}$ deassertion time		$0.5 \times T_C - 4.0$ [$WS = 1$] $T_C - 4.0$ [$2 \le WS \le 3$] $2.5 \times T_C - 4.0$ [$4 \le WS \le 7$] $3.5 \times T_C - 4.0$ [$WS \ge 8$]	2.3 8.5 27.3 39.8	— — — —	1.0 6.0 21.0 31.0	— — — —	ns ns ns ns

Because of an order from the United States International Trade Commission, BGA-packaged product lines and part numbers indicated here currently are not available from Freescale for import or sale in the United States prior to September 2010: DSP56301

Downloaded from Elcodis.com electronic components distributor

Table 2-8. SRAM Read and Write Accesses[3,6] (Continued)

No.	Characteristics	Symbol	Expression[1]	80 MHz		100 MHz		Unit
				Min	Max	Min	Max	
115	Address valid to $\overline{RD}$ assertion		$0.5 \times T_C - 4.0$	2.3	—	1.0	—	ns
116	$\overline{RD}$ assertion pulse width		$(WS + 0.25) \times T_C - 4.0$	11.6	—	8.5	—	ns
117	$\overline{RD}$ deassertion to address not valid		$0.25 \times T_C - 2.0$ [$1 \le WS \le 3$] $1.25 \times T_C - 2.0$ [$4 \le WS \le 7$] $2.25 \times T_C - 2.0$ [$WS \ge 8$]	1.1 13.6 26.1	— — —	0.5 10.5 20.5	— — —	ns ns ns
118	$\overline{TA}$ setup before $\overline{RD}$ or $\overline{WR}$ deassertion[4]		$0.25 \times T_C + 2.0$	5.1	—	4.5	—	ns
119	$\overline{TA}$ hold after $\overline{RD}$ or $\overline{WR}$ deassertion			0	—	0	—	ns

Notes:
1. WS is the number of wait states specified in the BCR.
2. Timings 100, 107 are guaranteed by design, not tested.
3. All timings for 100 MHz are measured from 0.5 · Vcc to 0.5 · Vcc
4. Timing 118 is relative to the deassertion edge of $\overline{RD}$ or $\overline{WR}$ even if $\overline{TA}$ remains active.
5. Timings 110, 111, and 112, are not helpful and are not specified for 100 MHz.
6. V_{CC} = 3.3 V ± 0.3 V; T_J = –40°C to +100°C, C_L = 50 pF

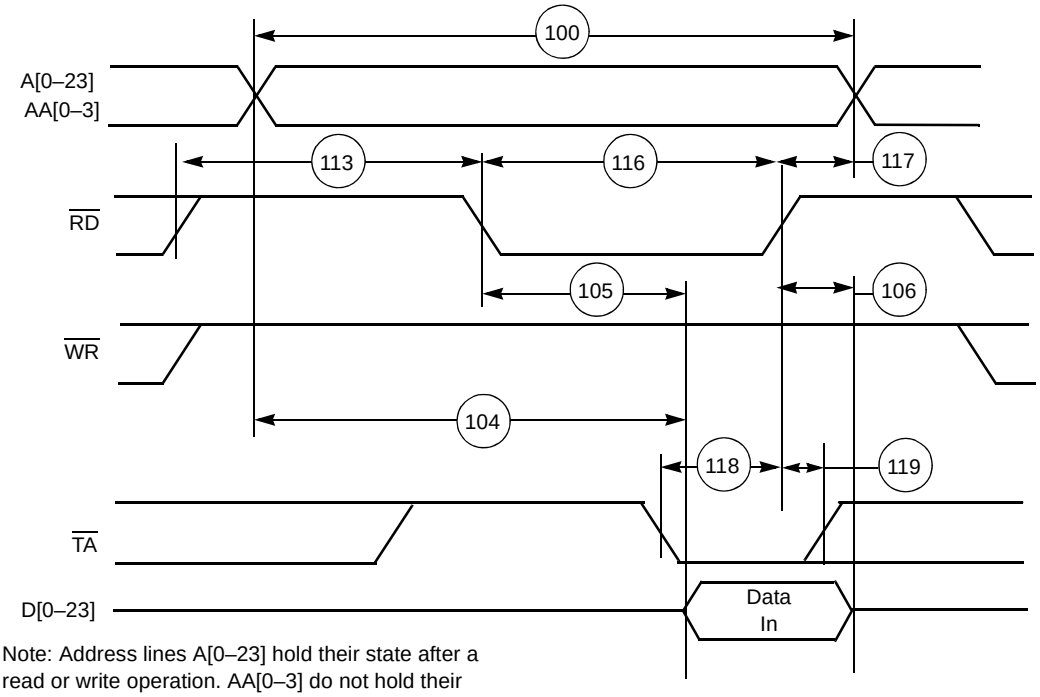

Note: Address lines A[0–23] hold their state after a read or write operation. AA[0–3] do not hold their state after a read or write operation.

Figure 2-12. SRAM Read Access

Because of an order from the United States International Trade Commission, BGA-packaged product lines and part numbers indicated here currently are not available from Freescale for import or sale in the United States prior to September 2010: DSP56301

Downloaded from Elcodis.com electronic components distributor

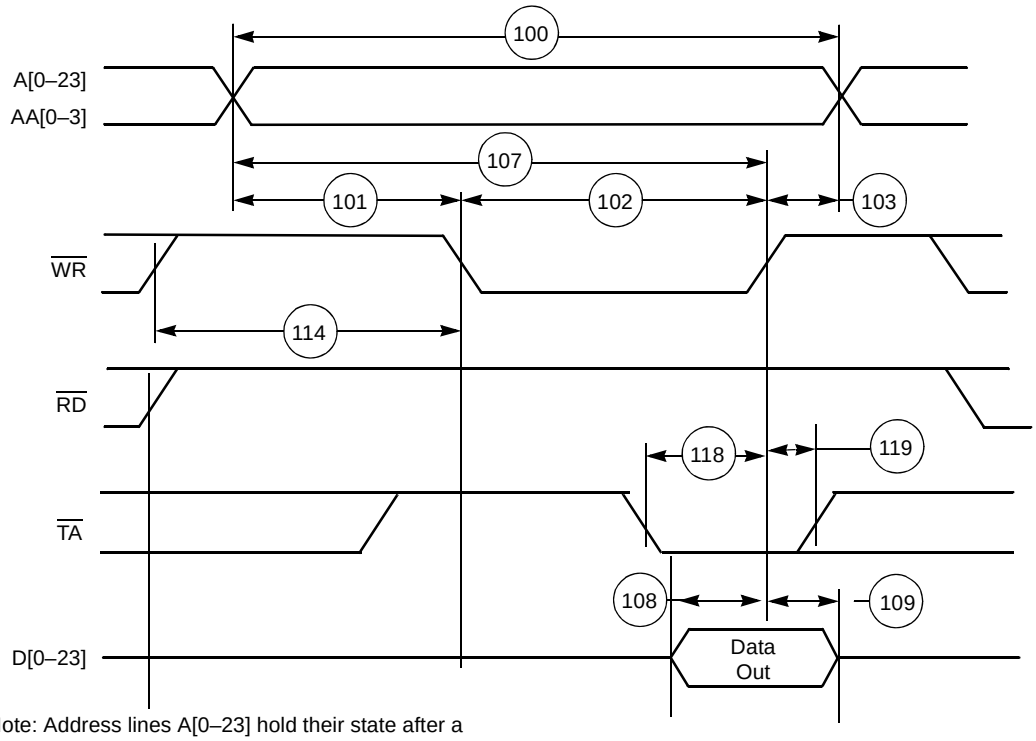

Note: Address lines A[0–23] hold their state after a read or write operation. AA[0–3] do not hold their state after a read or write operation.

Figure 2-13. SRAM Write Access

Because of an order from the United States International Trade Commission, BGA-packaged product lines and part numbers indicated here currently are not available from Freescale for import or sale in the United States prior to September 2010: DSP56301

Downloaded from Elcodis.com electronic components distributor

2.5.5.2 DRAM Timing

The selection guides in **Figure 2-14** and **Figure 2-17** are for primary selection only. Final selection should be based on the timing in the following tables. For example, the selection guide suggests that four wait states must be used for 100 MHz operation in Page Mode DRAM. However, using the information in the appropriate table, a designer could choose to evaluate whether fewer wait states might be used by determining which timing prevents operation at 100 MHz, by running the chip at a slightly lower frequency (for example, 95 MHz), by using faster DRAM (if it becomes available), and by manipulating control factors such as capacitive and resistive load to improve overall system performance.

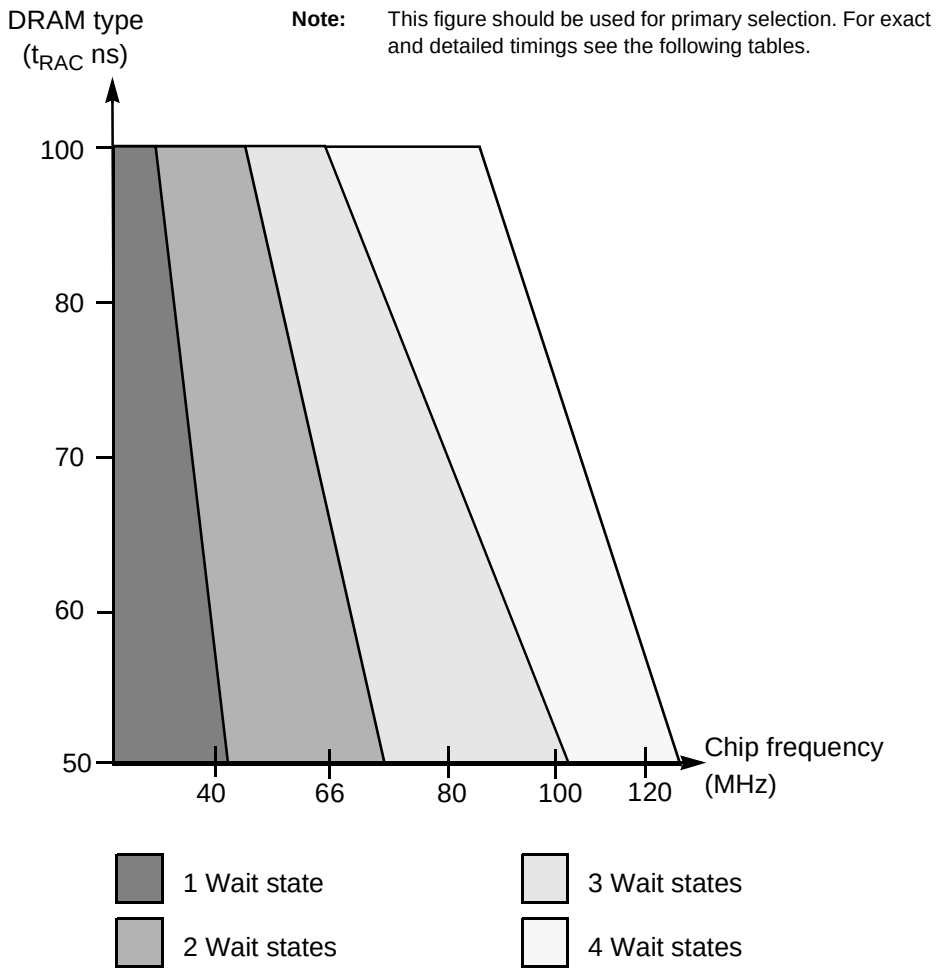

Figure 2-14. DRAM Page Mode Wait States Selection Guide

Because of an order from the United States International Trade Commission, BGA-packaged product lines and part numbers indicated here currently are not available from Freescale for import or sale in the United States prior to September 2010: DSP56301

Downloaded from Elcodis.com electronic components distributor

Table 2-9. DRAM Page Mode Timings, Two Wait States[1, 2, 3, 7]

No.	Characteristics	Symbol	Expression	80 MHz		Unit
				Min	Max	
131	Page mode cycle time for two consecutive accesses of the same direction		$3 \times T_C$	37.5	—	ns
	Page mode cycle time for mixed (read and write) accesses	t_{PC}	$2.75 \times T_C$	34.4	—	ns
132	$\overline{CAS}$ assertion to data valid (read)	t_{CAC}	$1.5 \times T_C - 6.5$	—	12.3	ns
133	Column address valid to data valid (read)	t_{AA}	$2.5 \times T_C - 6.5$	—	24.8	ns
134	$\overline{CAS}$ deassertion to data not valid (read hold time)	t_{OFF}		0.0	—	ns
135	Last $\overline{CAS}$ assertion to $\overline{RAS}$ deassertion	t_{RSH}	$1.75 \times T_C - 4.0$	17.9	—	ns
136	Previous $\overline{CAS}$ deassertion to $\overline{RAS}$ deassertion	t_{RHCP}	$3.25 \times T_C - 4.0$	36.6	—	ns
137	$\overline{CAS}$ assertion pulse width	t_{CAS}	$1.5 \times T_C - 4.0$	14.8	—	ns
138	Last $\overline{CAS}$ deassertion to $\overline{RAS}$ deassertion[5] BRW[1–0] = 00 BRW[1–0] = 01 BRW[1–0] = 10 BRW[1–0] = 11	t_{CRP}	 Not supported $3.5 \times T_C - 6.0$ $4.5 \times T_C - 6.0$ $6.5 \times T_C - 6.0$	 — 37.8 50.3 75.3	 — — — —	 ns ns ns ns
139	$\overline{CAS}$ deassertion pulse width	t_{CP}	$1.25 \times T_C - 4.0$	11.6	—	ns
140	Column address valid to $\overline{CAS}$ assertion	t_{ASC}	$T_C - 4.0$	8.5	—	ns
141	$\overline{CAS}$ assertion to column address not valid	t_{CAH}	$1.75 \times T_C - 4.0$	17.9	—	ns
142	Last column address valid to $\overline{RAS}$ deassertion	t_{RAL}	$3 \times T_C - 4.0$	33.5	—	ns
143	$\overline{WR}$ deassertion to $\overline{CAS}$ assertion	t_{RCS}	$1.25 \times T_C - 4$	11.6	—	ns
144	$\overline{CAS}$ deassertion to $\overline{WR}$ assertion	t_{RCH}	$0.5 \times T_C - 3.7$	2.6	—	ns
145	$\overline{CAS}$ assertion to $\overline{WR}$ deassertion	t_{WCH}	$1.5 \times T_C - 4.2$	14.6	—	ns
146	$\overline{WR}$ assertion pulse width	t_{WP}	$2.5 \times T_C - 4.5$	26.8	—	ns
147	Last $\overline{WR}$ assertion to $\overline{RAS}$ deassertion	t_{RWL}	$2.75 \times T_C - 4.3$	30.1	—	ns
148	$\overline{WR}$ assertion to $\overline{CAS}$ deassertion	t_{CWL}	$2.5 \times T_C - 4.3$	27.0	—	ns
149	Data valid to $\overline{CAS}$ assertion (write)	t_{DS}	$0.25 \times T_C - 3.0$	0.1	—	ns
150	$\overline{CAS}$ assertion to data not valid (write)	t_{DH}	$1.75 \times T_C - 4.0$	17.9	—	ns
151	$\overline{WR}$ assertion to $\overline{CAS}$ assertion	t_{WCS}	$T_C - 4.3$	8.2	—	ns
152	Last $\overline{RD}$ assertion to $\overline{RAS}$ deassertion	t_{ROH}	$2.5 \times T_C - 4.0$	27.3	—	ns
153	$\overline{RD}$ assertion to data valid	t_{GA}	$1.75 \times T_C - 6.5$	—	15.4	ns
154	$\overline{RD}$ deassertion to data not valid[6]	t_{GZ}		0.0	—	ns
155	$\overline{WR}$ assertion to data active		$0.75 \times T_C - 1.5$	7.9	—	ns
156	$\overline{WR}$ deassertion to data high impedance		$0.25 \times T_C$	—	3.1	ns

Notes:
1. The number of wait states for Page mode access is specified in the DCR.
2. The refresh period is specified in the DCR.
3. The asynchronous delays specified in the expressions are valid for the DSP56301.
4. All the timings are calculated for the worst case. Some of the timings are better for specific cases (for example, t_{PC} equals $3 \times T_C$ for read-after-read or write-after-write sequences).
5. BRW[1–0] (DRAM Control Register bits) defines the number of wait states that should be inserted in each DRAM out-of-page access.
6. $\overline{RD}$ deassertion always occurs after $\overline{CAS}$ deassertion; therefore, the restricted timing is t_{OFF} and not t_{GZ}.
7. At this time, there are no DRAMs fast enough to fit with two wait states Page mode @ 100MHz (see **Table 2-14**). However, DRAM speeds are approaching two-wait-state compatibility.

Because of an order from the United States International Trade Commission, BGA-packaged product lines and part numbers indicated here currently are not available from Freescale for import or sale in the United States prior to September 2010: DSP56301

Downloaded from Elcodis.com electronic components distributor

Table 2-10. DRAM Page Mode Timings, Three Wait States[1, 2, 3]

No.	Characteristics	Symbol	Expression	80 MHz		100 MHz		Unit
				Min	Max	Min	Max	
131	Page mode cycle time for two consecutive accesses of the same direction		$4 \times T_C$	50.0	—	40.0	—	ns
	Page mode cycle time for mixed (read and write) accesses	t_{PC}	$3.5 \times T_C$	43.7	—	35.0	—	ns
132	$\overline{CAS}$ assertion to data valid (read)	t_{CAC}	$2 \times T_C - 5.7$	—	19.3	—	14.3	ns
133	Column address valid to data valid (read)	t_{AA}	$3 \times T_C - 5.7$	—	31.8	—	24.3	ns
134	$\overline{CAS}$ deassertion to data not valid (read hold time)	t_{OFF}		0.0	—	0.0	—	ns
135	Last $\overline{CAS}$ assertion to $\overline{RAS}$ deassertion	t_{RSH}	$2.5 \times T_C - 4.0$	27.3	—	21.0	—	ns
136	Previous $\overline{CAS}$ deassertion to $\overline{RAS}$ deassertion	t_{RHCP}	$4.5 \times T_C - 4.0$	52.3	—	41.0	—	ns
137	$\overline{CAS}$ assertion pulse width	t_{CAS}	$2 \times T_C - 4.0$	21.0	—	16.0	—	ns
138	Last $\overline{CAS}$ deassertion to $\overline{RAS}$ assertion[5]	t_{CRP}						
	• BRW[1–0] = 00		Not supported	—	—	—	—	ns
	• BRW[1–0] = 01		$3.75 \times T_C - 6.0$	40.9	—	31.5	—	ns
	• BRW[1–0] = 10		$4.75 \times T_C - 6.0$	53.4	—	41.5	—	ns
	• BRW[1–0] = 11		$6.75 \times T_C - 6.0$	78.4	—	61.5	—	ns
139	$\overline{CAS}$ deassertion pulse width	t_{CP}	$1.5 \times T_C - 4.0$	14.8	—	11.0	—	ns
140	Column address valid to $\overline{CAS}$ assertion	t_{ASC}	$T_C - 4.0$	8.5	—	6.0	—	ns
141	$\overline{CAS}$ assertion to column address not valid	t_{CAH}	$2.5 \times T_C - 4.0$	27.3	—	21.0	—	ns
142	Last column address valid to $\overline{RAS}$ deassertion	t_{RAL}	$4 \times T_C - 4.0$	46.0	—	36.0	—	ns
143	$\overline{WR}$ deassertion to $\overline{CAS}$ assertion	t_{RCS}	$1.25 \times T_C - 4.0$	11.6	—	8.5	—	ns
144	$\overline{CAS}$ deassertion to $\overline{WR}$ assertion	t_{RCH}	$0.75 \times TC - 4.0$	5.4	—	3.5	—	ns
145	$\overline{CAS}$ assertion to $\overline{WR}$ deassertion	t_{WCH}	$2.25 \times T_C - 4.2$	23.9	—	18.3	—	ns
146	$\overline{WR}$ assertion pulse width	t_{WP}	$3.5 \times T_C - 4.5$	39.3	—	30.5	—	ns
147	Last $\overline{WR}$ assertion to $\overline{RAS}$ deassertion	t_{RWL}	$3.75 \times T_C - 4.3$	42.6	—	33.2	—	ns
148	$\overline{WR}$ assertion to $\overline{CAS}$ deassertion	t_{CWL}	$3.25 \times T_C - 4.3$	36.3	—	28.2	—	ns
149	Data valid to $\overline{CAS}$ assertion (write)	t_{DS}	$0.5 \times T_C - 4.8$	2.0	—	0.2	—	ns
150	$\overline{CAS}$ assertion to data not valid (write)	t_{DH}	$2.5 \times T_C - 4.0$	27.3	—	21.0	—	ns
151	$\overline{WR}$ assertion to $\overline{CAS}$ assertion	t_{WCS}	$1.25 \times T_C - 4.3$	11.3	—	8.2	—	ns
152	Last $\overline{RD}$ assertion to $\overline{RAS}$ deassertion	t_{ROH}	$3.5 \times T_C - 4.0$	39.8	—	31.0	—	ns
153	$\overline{RD}$ assertion to data valid	t_{GA}	$2.5 \times T_C - 5.7$	—	25.6	—	19.3	ns
154	$\overline{RD}$ deassertion to data not valid[6]	t_{GZ}		0.0	—	0.0	—	ns
155	$\overline{WR}$ assertion to data active		$0.75 \times T_C - 1.5$	7.9	—	6.0	—	ns
156	$\overline{WR}$ deassertion to data high impedance		$0.25 \times T_C$	—	3.1	—	2.5	ns

Notes:
1. The number of wait states for Page mode access is specified in the DCR.
2. The refresh period is specified in the DCR.
3. The asynchronous delays specified in the expressions are valid for DSP56301.
4. All the timings are calculated for the worst case. Some of the timings are better for specific cases (for example, t_{PC} equals $4 \times T_C$ for read-after-read or write-after-write sequences).
5. BRW[1–0] (DRAM control register bits) defines the number of wait states that should be inserted in each DRAM out-of page-access.
6. $\overline{RD}$ deassertion always occurs after $\overline{CAS}$ deassertion; therefore, the restricted timing is t_{OFF} and not t_{GZ}.

Because of an order from the United States International Trade Commission, BGA-packaged product lines and part numbers indicated here currently are not available from Freescale for import or sale in the United States prior to September 2010: DSP56301

Downloaded from Elcodis.com electronic components distributor

Table 2-11. DRAM Page Mode Timings, Four Wait States[1, 2, 3]

No.	Characteristics	Symbol	Expression	80 MHz		100 MHz		Unit
				Min	Max	Min	Max	
131	Page mode cycle time for two consecutive accesses of the same direction		$5 \times T_C$	62.5	—	50.0	—	ns
	Page mode cycle time for mixed (read and write) accesses	t_{PC}	$4.5 \times T_C$	56.2	—	45.0	—	ns
132	$\overline{CAS}$ assertion to data valid (read)	t_{CAC}	$2.75 \times T_C - 5.7$	—	28.7	—	21.8	ns
133	Column address valid to data valid (read)	t_{AA}	$3.75 \times T_C - 5.7$	—	41.2	—	31.8	ns
134	$\overline{CAS}$ deassertion to data not valid (read hold time)	t_{OFF}		0.0	—	0.0	—	ns
135	Last $\overline{CAS}$ assertion to $\overline{RAS}$ deassertion	t_{RSH}	$3.5 \times T_C - 4.0$	39.8	—	31.0	—	ns
136	Previous $\overline{CAS}$ deassertion to $\overline{RAS}$ deassertion	t_{RHCP}	$6 \times T_C - 4.0$	71.0	—	56.0	—	ns
137	$\overline{CAS}$ assertion pulse width	t_{CAS}	$2.5 \times T_C - 4.0$	27.3	—	21.0	—	ns
138	Last $\overline{CAS}$ deassertion to $\overline{RAS}$ assertion[5] • BRW[1–0] = 00 • BRW[1–0] = 01 • BRW[1–0] = 10 • BRW[1–0] = 11	t_{CRP}	 Not supported $4.25 \times T_C - 6.0$ $5.25 \times T_C - 6.0$ $7.25 \times T_C - 6.0$	 — 47.2 59.6 84.6	 — — — —	 — 36.5 46.5 66.5	 — — — —	 ns ns ns ns
139	$\overline{CAS}$ deassertion pulse width	t_{CP}	$2 \times T_C - 4.0$	21.0	—	16.0	—	ns
140	Column address valid to $\overline{CAS}$ assertion	t_{ASC}	$T_C - 4.0$	8.5	—	6.0	—	ns
141	$\overline{CAS}$ assertion to column address not valid	t_{CAH}	$3.5 \times T_C - 4.0$	39.8	—	31.0	—	ns
142	Last column address valid to $\overline{RAS}$ deassertion	t_{RAL}	$5 \times T_C - 4.0$	58.5	—	46.0	—	ns
143	$\overline{WR}$ deassertion to $\overline{CAS}$ assertion	t_{RCS}	$1.25 \times T_C - 4.0$	11.8	—	8.5	—	ns
144	$\overline{CAS}$ deassertion to $\overline{WR}$ assertion	t_{RCH}	$1.25 \times T_C - 3.7$	11.9	—	8.8	—	ns
145	$\overline{CAS}$ assertion to $\overline{WR}$ deassertion	t_{WCH}	$3.25 \times T_C - 4.2$	36.4	—	28.3	—	ns
146	$\overline{WR}$ assertion pulse width	t_{WP}	$4.5 \times T_C - 4.5$	51.8	—	40.5	—	ns
147	Last $\overline{WR}$ assertion to $\overline{RAS}$ deassertion	t_{RWL}	$4.75 \times T_C - 4.3$	55.1	—	43.2	—	ns
148	$\overline{WR}$ assertion to $\overline{CAS}$ deassertion	t_{CWL}	$3.75 \times T_C - 4.3$	42.6	—	33.2	—	ns
149	Data valid to $\overline{CAS}$ assertion (write)	t_{DS}	$0.5 \times T_C - 4.8$	1.5	—	0.2	—	ns
150	$\overline{CAS}$ assertion to data not valid (write)	t_{DH}	$3.5 \times T_C - 4.0$	39.8	—	31.0	—	ns
151	$\overline{WR}$ assertion to $\overline{CAS}$ assertion	t_{WCS}	$1.25 \times T_C - 4.3$	11.3	—	8.2	—	ns
152	Last $\overline{RD}$ assertion to $\overline{RAS}$ deassertion	t_{ROH}	$4.5 \times T_C - 4.0$	52.3	—	41.0	—	ns
153	$\overline{RD}$ assertion to data valid	t_{GA}	$3.25 \times T_C - 5.7$	—	34.9	—	26.8	ns
154	$\overline{RD}$ deassertion to data not valid[6]	t_{GZ}		0.0	—	0.0	—	ns
155	$\overline{WR}$ assertion to data active		$0.75 \times T_C - 1.5$	7.9	—	6.0	—	ns
156	$\overline{WR}$ deassertion to data high impedance		$0.25 \times T_C$	—	3.1	—	2.5	ns

Notes:
1. The number of wait states for Page mode access is specified in the DCR.
2. The refresh period is specified in the DCR.
3. The asynchronous delays specified in the expressions are valid for DSP56301.
4. All the timings are calculated for the worst case. Some of the timings are better for specific cases (for example, t_{PC} equals $3 \times T_C$ for read-after-read or write-after-write sequences).
5. BRW[1–0] (DRAM control register bits) defines the number of wait states that should be inserted in each DRAM out-of-page access. N/A = does not apply because 100 MHz requires a minimum of three wait states.
6. $\overline{RD}$ deassertion always occurs after $\overline{CAS}$ deassertion; therefore, the restricted timing is t_{OFF} and not t_{GZ}.

Because of an order from the United States International Trade Commission, BGA-packaged product lines and part numbers indicated here currently are not available from Freescale for import or sale in the United States prior to September 2010: DSP56301

Downloaded from Elcodis.com electronic components distributor

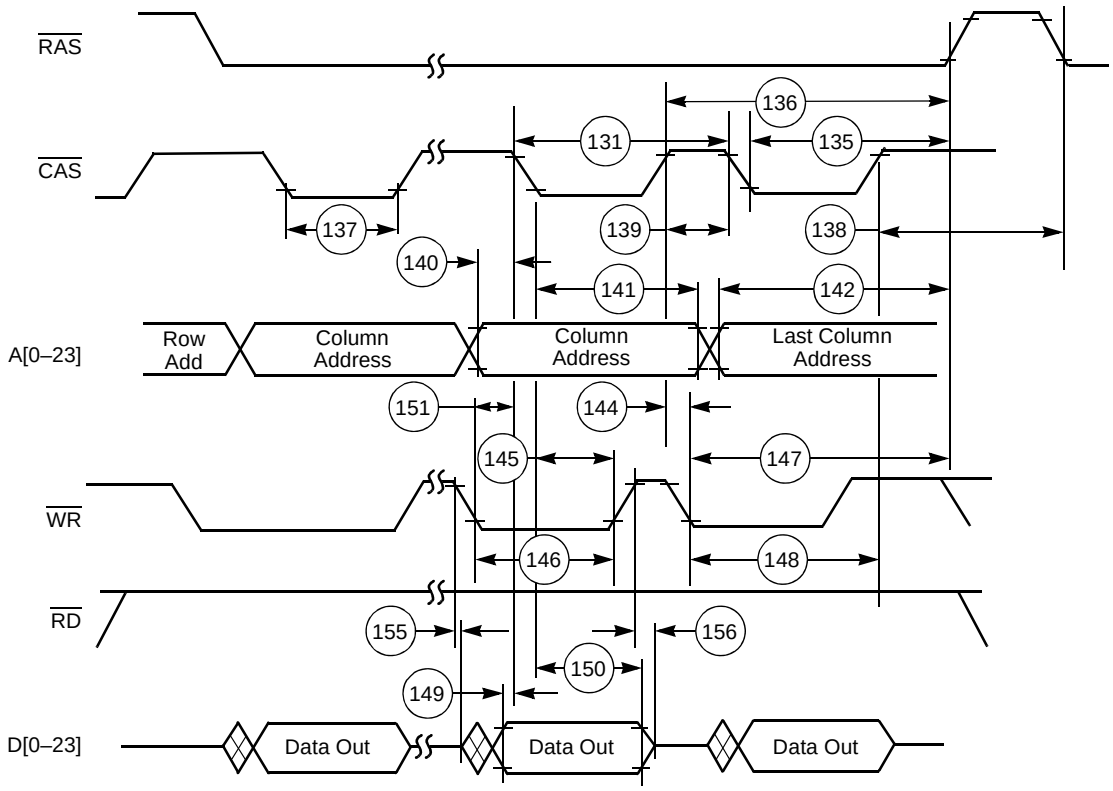

Figure 2-15. DRAM Page Mode Write Accesses

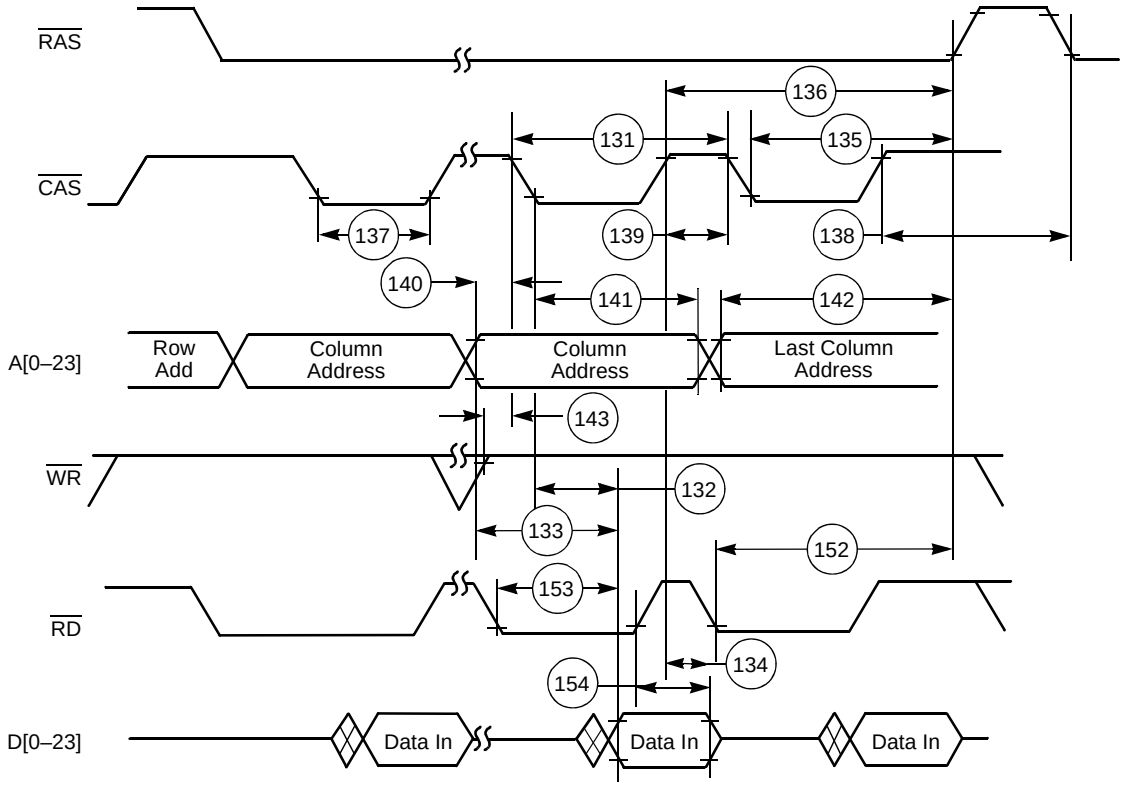

Figure 2-16. DRAM Page Mode Read Accesses

Because of an order from the United States International Trade Commission, BGA-packaged product lines and part numbers indicated here currently are not available from Freescale for import or sale in the United States prior to September 2010: DSP56301

Downloaded from Elcodis.com electronic components distributor

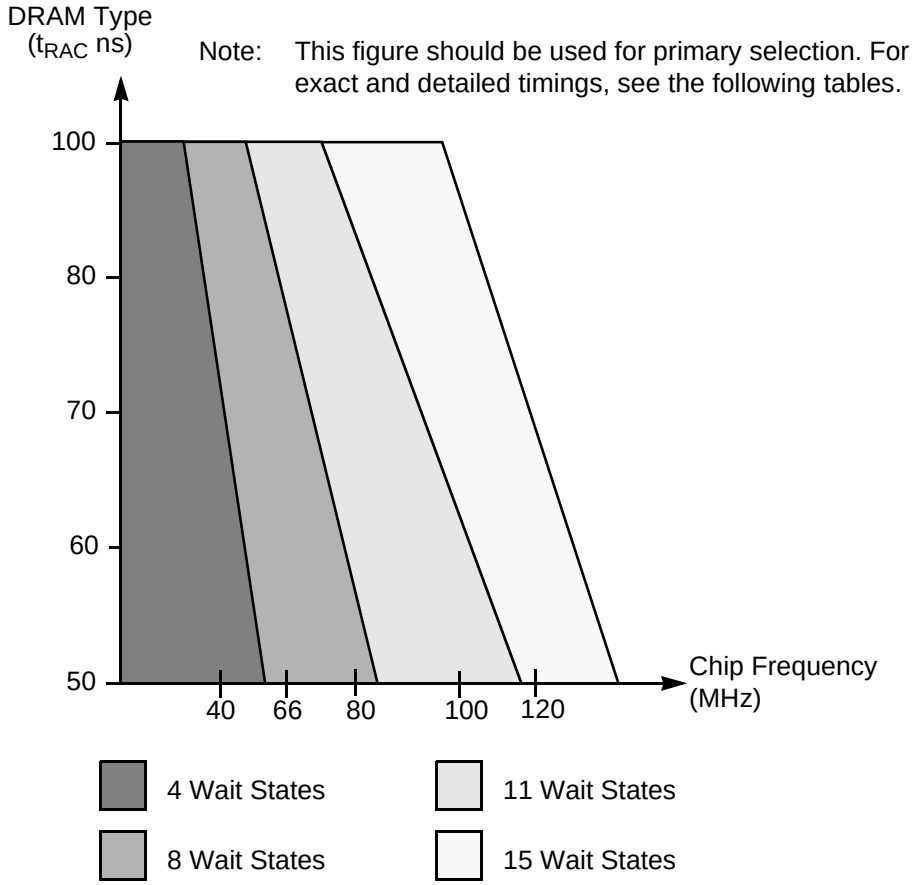

Figure 2-17. DRAM Out-of-Page Wait States Selection Guide

Table 2-12. DRAM Out-of-Page and Refresh Timings, Eight Wait States[1, 2]

No.	Characteristics[3]	Symbol	Expression	80 MHz		Unit
				Min	Max	
157	Random read or write cycle time	t_{RC}	$9 \times T_C$	112.5	—	ns
158	$\overline{RAS}$ assertion to data valid (read)	t_{RAC}	$4.75 \times T_C - 6.5$	—	52.9	ns
159	$\overline{CAS}$ assertion to data valid (read)	t_{CAC}	$2.25 \times T_C - 6.5$	—	21.6	ns
160	Column address valid to data valid (read)	t_{AA}	$3 \times T_C - 6.5$	—	31.0	ns
161	$\overline{CAS}$ deassertion to data not valid (read hold time)	t_{OFF}		0.0	—	ns
162	$\overline{RAS}$ deassertion to $\overline{RAS}$ assertion	t_{RP}	$3.25 \times T_C - 4.0$	36.6	—	ns
163	$\overline{RAS}$ assertion pulse width	t_{RAS}	$5.75 \times T_C - 4.0$	67.9	—	ns
164	$\overline{CAS}$ assertion to $\overline{RAS}$ deassertion	t_{RSH}	$3.25 \times T_C - 4.0$	36.6	—	ns
165	$\overline{RAS}$ assertion to $\overline{CAS}$ deassertion	t_{CSH}	$4.75 \times T_C - 4.0$	55.4	—	ns
166	$\overline{CAS}$ assertion pulse width	t_{CAS}	$2.25 \times T_C - 4.0$	24.1	—	ns
167	$\overline{RAS}$ assertion to $\overline{CAS}$ assertion	t_{RCD}	$2.5 \times T_C \pm 2$	29.3	33.3	ns
168	$\overline{RAS}$ assertion to column address valid	t_{RAD}	$1.75 \times T_C \pm 2$	19.9	23.9	ns
169	$\overline{CAS}$ deassertion to $\overline{RAS}$ assertion	t_{CRP}	$4.25 \times T_C - 4.0$	49.1	—	ns
170	$\overline{CAS}$ deassertion pulse width	t_{CP}	$2.75 \times T_C - 6.0$	28.4	—	ns
171	Row address valid to $\overline{RAS}$ assertion	t_{ASR}	$3.25 \times T_C - 4.0$	36.6	—	ns

Because of an order from the United States International Trade Commission, BGA-packaged product lines and part numbers indicated here currently are not available from Freescale for import or sale in the United States prior to September 2010: DSP56301

Downloaded from Elcodis.com electronic components distributor

Table 2-12. DRAM Out-of-Page and Refresh Timings, Eight Wait States[1, 2] (Continued)

No.	Characteristics[3]	Symbol	Expression	80 MHz		Unit
				Min	Max	
172	$\overline{RAS}$ assertion to row address not valid	t_{RAH}	$1.75 \times T_C - 4.0$	17.9	—	ns
173	Column address valid to $\overline{CAS}$ assertion	t_{ASC}	$0.75 \times T_C - 4.0$	5.4	—	ns
174	$\overline{CAS}$ assertion to column address not valid	t_{CAH}	$3.25 \times T_C - 4.0$	36.6	—	ns
175	$\overline{RAS}$ assertion to column address not valid	t_{AR}	$5.75 \times T_C - 4.0$	67.9	—	ns
176	Column address valid to $\overline{RAS}$ deassertion	t_{RAL}	$4 \times T_C - 4.0$	46.0	—	ns
177	$\overline{WR}$ deassertion to $\overline{CAS}$ assertion	t_{RCS}	$2 \times T_C - 3.8$	21.2	—	ns
178	$\overline{CAS}$ deassertion to $\overline{WR}$[4] assertion	t_{RCH}	$1.25 \times T_C - 3.7$	11.9	—	ns
179	$\overline{RAS}$ deassertion to $\overline{WR}$[4] assertion	t_{RRH}	$0.25 \times T_C - 2.6$	0.5	—	ns
180	$\overline{CAS}$ assertion to $\overline{WR}$ deassertion	t_{WCH}	$3 \times T_C - 4.2$	33.3	—	ns
181	$\overline{RAS}$ assertion to $\overline{WR}$ deassertion	t_{WCR}	$5.5 \times T_C - 4.2$	64.6	—	ns
182	$\overline{WR}$ assertion pulse width	t_{WP}	$8.5 \times T_C - 4.5$	101.8	—	ns
183	$\overline{WR}$ assertion to $\overline{RAS}$ deassertion	t_{RWL}	$8.75 \times T_C - 4.3$	105.1	—	ns
184	$\overline{WR}$ assertion to $\overline{CAS}$ deassertion	t_{CWL}	$7.75 \times T_C - 4.3$	92.6	—	ns
185	Data valid to $\overline{CAS}$ assertion (write)	t_{DS}	$4.75 \times T_C - 4.0$	55.4	—	ns
186	$\overline{CAS}$ assertion to data not valid (write)	t_{DH}	$3.25 \times T_C - 4.0$	36.6	—	ns
187	$\overline{RAS}$ assertion to data not valid (write)	t_{DHR}	$5.75 \times T_C - 4.0$	67.9	—	ns
188	$\overline{WR}$ assertion to $\overline{CAS}$ assertion	t_{WCS}	$5.5 \times T_C - 4.3$	64.5	—	ns
189	$\overline{CAS}$ assertion to $\overline{RAS}$ assertion (refresh)	t_{CSR}	$1.5 \times T_C - 4.0$	14.8	—	ns
190	$\overline{RAS}$ deassertion to $\overline{CAS}$ assertion (refresh)	t_{RPC}	$1.75 \times T_C - 4.0$	17.9	—	ns
191	$\overline{RD}$ assertion to $\overline{RAS}$ deassertion	t_{ROH}	$8.5 \times T_C - 4.0$	102.3	—	ns
192	$\overline{RD}$ assertion to data valid	t_{GA}	$7.5 \times T_C - 6.5$	—	87.3	ns
193	$\overline{RD}$ deassertion to data not valid[3]	t_{GZ}		0.0	—	ns
194	$\overline{WR}$ assertion to data active		$0.75 \times T_C - 1.5$	7.9	—	ns
195	$\overline{WR}$ deassertion to data high impedance		$0.25 \times T_C$	—	3.1	ns

Notes:
1. The number of wait states for an out-of-page access is specified in the DCR.
2. The refresh period is specified in the DCR.
3. $\overline{RD}$ deassertion always occurs after $\overline{CAS}$ deassertion; therefore, the restricted timing is t_{OFF} and not t_{GZ}.
4. Either t_{RCH} or t_{RRH} must be satisfied for read cycles.

Because of an order from the United States International Trade Commission, BGA-packaged product lines and part numbers indicated here currently are not available from Freescale for import or sale in the United States prior to September 2010: DSP56301

Downloaded from Elcodis.com electronic components distributor

Table 2-13. DRAM Out-of-Page and Refresh Timings, Eleven Wait States[1, 2]

No.	Characteristics[3]	Symbol	Expression	80 MHz		100 MHz		Unit
				Min	Max	Min	Max	
157	Random read or write cycle time	t_{RC}	$12 \times T_C$	150.0	—	120.0	—	ns
158	$\overline{RAS}$ assertion to data valid (read)	t_{RAC}	**80 MHz**: $6.25 \times T_C - 6.5$ **100 MHz**: $6.25 \times T_C - 7.0$	— —	71.6 —	— —	— 55.5	ns ns
159	$\overline{CAS}$ assertion to data valid (read)	t_{CAC}	**80 MHz**: $3.75 \times T_C - 6.5$ **100 MHz**: $3.75 \times T_C - 7.0$	— —	40.4 —	— —	— 30.5	ns ns
160	Column address valid to data valid (read)	t_{AA}	**80 MHz**: $4.5 \times T_C - 6.5$ **100 MHz**: $4.5 \times T_C - 7.0$	— —	49.8 —	— —	— 38.0	ns ns
161	$\overline{CAS}$ deassertion to data not valid (read hold time)	t_{OFF}		0.0	—	0.0	—	ns
162	$\overline{RAS}$ deassertion to $\overline{RAS}$ assertion	t_{RP}	$4.25 \times T_C - 4.0$	49.1	—	38.5	—	ns
163	$\overline{RAS}$ assertion pulse width	t_{RAS}	$7.75 \times T_C - 4.0$	92.9	—	73.5	—	ns
164	$\overline{CAS}$ assertion to $\overline{RAS}$ deassertion	t_{RSH}	$5.25 \times T_C - 4.0$	61.6	—	48.5	—	ns
165	$\overline{RAS}$ assertion to $\overline{CAS}$ deassertion	t_{CSH}	$6.25 \times T_C - 4.0$	74.1	—	58.5	—	ns
166	$\overline{CAS}$ assertion pulse width	t_{CAS}	$3.75 \times T_C - 4.0$	42.9	—	33.5	—	ns
167	$\overline{RAS}$ assertion to $\overline{CAS}$ assertion	t_{RCD}	$2.5 \times T_C \pm 4.0$	27.3	35.3	21.0	29.0	ns
168	$\overline{RAS}$ assertion to column address valid	t_{RAD}	$1.75 \times T_C \pm 4.0$	17.9	25.9	13.5	21.5	ns
169	$\overline{CAS}$ deassertion to $\overline{RAS}$ assertion	t_{CRP}	$5.75 \times T_C - 4.0$	67.9	—	53.5	—	ns
170	$\overline{CAS}$ deassertion pulse width	t_{CP}	$4.25 \times T_C - 6.0$	49.1	—	36.5	—	ns
171	Row address valid to $\overline{RAS}$ assertion	t_{ASR}	$4.25 \times T_C - 4.0$	49.1	—	38.5	—	ns
172	$\overline{RAS}$ assertion to row address not valid	t_{RAH}	$1.75 \times T_C - 4.0$	17.9	—	13.5	—	ns
173	Column address valid to $\overline{CAS}$ assertion	t_{ASC}	$0.75 \times T_C - 4.0$	5.4	—	3.5	—	ns
174	$\overline{CAS}$ assertion to column address not valid	t_{CAH}	$5.25 \times T_C - 4.0$	61.6	—	48.5	—	ns
175	$\overline{RAS}$ assertion to column address not valid	t_{AR}	$7.75 \times T_C - 4.0$	92.9	—	73.5	—	ns
176	Column address valid to $\overline{RAS}$ deassertion	t_{RAL}	$6 \times T_C - 4.0$	71.0	—	56.0	—	ns
177	$\overline{WR}$ deassertion to $\overline{CAS}$ assertion	t_{RCS}	$3.0 \times T_C - 4.0$	33.5	—	26.0	—	ns
178	$\overline{CAS}$ deassertion to $\overline{WR}$[4] assertion	t_{RCH}	$1.75 \times T_C - 3.7$	17.9	—	13.8	—	ns
179	$\overline{RAS}$ deassertion to $\overline{WR}$[4] assertion	t_{RRH}	**80 MHz**: $0.25 \times T_C - 2.6$ **100 MHz**: $0.25 \times T_C - 2.0$	0.5 —	— —	— 0.5	— —	ns ns
180	$\overline{CAS}$ assertion to $\overline{WR}$ deassertion	t_{WCH}	$5 \times T_C - 4.2$	58.3	—	45.8	—	ns
181	$\overline{RAS}$ assertion to $\overline{WR}$ deassertion	t_{WCR}	$7.5 \times T_C - 4.2$	89.6	—	70.8	—	ns
182	$\overline{WR}$ assertion pulse width	t_{WP}	$11.5 \times T_C - 4.5$	139.3	—	110.5	—	ns
183	$\overline{WR}$ assertion to $\overline{RAS}$ deassertion	t_{RWL}	$11.75 \times T_C - 4.3$	142.7	—	113.2	—	ns
184	$\overline{WR}$ assertion to $\overline{CAS}$ deassertion	t_{CWL}	$10.25 \times T_C - 4.3$	123.8	—	98.2	—	ns
185	Data valid to $\overline{CAS}$ assertion (write)	t_{DS}	$5.75 \times T_C - 4.0$	67.9	—	53.5	—	ns
186	$\overline{CAS}$ assertion to data not valid (write)	t_{DH}	$5.25 \times T_C - 4.0$	61.6	—	48.5	—	ns

Because of an order from the United States International Trade Commission, BGA-packaged product lines and part numbers indicated here currently are not available from Freescale for import or sale in the United States prior to September 2010: DSP56301

Downloaded from Elcodis.com electronic components distributor

Table 2-13. DRAM Out-of-Page and Refresh Timings, Eleven Wait States[1, 2] (Continued)

No.	Characteristics[3]	Symbol	Expression	80 MHz		100 MHz		Unit
				Min	Max	Min	Max	
187	$\overline{RAS}$ assertion to data not valid (write)	t_{DHR}	$7.75 \times T_C - 4.0$	92.9	—	73.5	—	ns
188	$\overline{WR}$ assertion to $\overline{CAS}$ assertion	t_{WCS}	$6.5 \times T_C - 4.3$	77.0	—	60.7	—	ns
189	$\overline{CAS}$ assertion to $\overline{RAS}$ assertion (refresh)	t_{CSR}	$1.5 \times T_C - 4.0$	14.8	—	11.0	—	ns
190	$\overline{RAS}$ deassertion to $\overline{CAS}$ assertion (refresh)	t_{RPC}	$2.75 \times T_C - 4.0$	30.4	—	23.5	—	ns
191	$\overline{RD}$ assertion to $\overline{RAS}$ deassertion	t_{ROH}	$11.5 \times T_C - 4.0$	139.8	—	111.0	—	ns
192	$\overline{RD}$ assertion to data valid	t_{GA}	**80 MHz**: $10 \times T_C - 6.5$ **100 MHz**: $10 \times T_C - 7.0$	— —	118.5 —	— —	— 93.0	ns ns
193	$\overline{RD}$ deassertion to data not valid[3]	t_{GZ}		0.0	—	0.0	—	ns
194	$\overline{WR}$ assertion to data active		$0.75 \times T_C - 1.5$	9.1	—	6.0	—	ns
195	$\overline{WR}$ deassertion to data high impedance		$0.25 \times T_C$	—	3.1	—	2.5	ns

Notes:
1. The number of wait states for an out-of-page access is specified in the DCR.
2. The refresh period is specified in the DCR.
3. $\overline{RD}$ deassertion always occurs after $\overline{CAS}$ deassertion; therefore, the restricted timing is t_{OFF} and not t_{GZ}.
4. Either t_{RCH} or t_{RRH} must be satisfied for read cycles.

Table 2-14. DRAM Out-of-Page and Refresh Timings, Fifteen Wait States[1, 2]

No.	Characteristics[3]	Symbol	Expression	80 MHz		100 MHz		Unit
				Min	Max	Min	Max	
157	Random read or write cycle time	t_{RC}	$16 \times T_C$	200.0	—	160.0	—	ns
158	$\overline{RAS}$ assertion to data valid (read)	t_{RAC}	**80 MHz**: $8.25 \times T_C - 6.5$ **100 MHz**: $8.25 \times T_C - 5.7$	— —	96.6 —	— —	— 76.8	ns ns
159	$\overline{CAS}$ assertion to data valid (read)	t_{CAC}	**80 MHz**: $4.75 \times T_C - 6.5$ **100 MHz**: $4.75 \times T_C - 5.7$	— —	52.9 —	— —	— 41.8	ns ns
160	Column address valid to data valid (read)	t_{AA}	**80 MHz**: $5.5 \times T_C - 6.5$ **100 MHz**: $5.5 \times T_C - 5.7$	— —	62.3 —	— —	— 49.3	ns ns
161	$\overline{CAS}$ deassertion to data not valid (read hold time)	t_{OFF}	0.0	0.0	—	0.0	—	ns
162	$\overline{RAS}$ deassertion to $\overline{RAS}$ assertion	t_{RP}	$6.25 \times T_C - 4.0$	74.1	—	58.5	—	ns
163	$\overline{RAS}$ assertion pulse width	t_{RAS}	$9.75 \times T_C - 4.0$	117.9	—	93.5	—	ns
164	$\overline{CAS}$ assertion to $\overline{RAS}$ deassertion	t_{RSH}	$6.25 \times T_C - 4.0$	74.1	—	58.5	—	ns
165	$\overline{RAS}$ assertion to $\overline{CAS}$ deassertion	t_{CSH}	$8.25 \times T_C - 4.0$	99.1	—	78.5	—	ns
166	$\overline{CAS}$ assertion pulse width	t_{CAS}	$4.75 \times T_C - 4.0$	55.4	—	43.5	—	ns
167	$\overline{RAS}$ assertion to $\overline{CAS}$ assertion	t_{RCD}	$3.5 \times T_C \pm 2$	41.8	45.8	33.0	37.0	ns
168	$\overline{RAS}$ assertion to column address valid	t_{RAD}	$2.75 \times T_C \pm 2.0$	32.4	36.4	25.5	29.5	ns
169	$\overline{CAS}$ deassertion to $\overline{RAS}$ assertion	t_{CRP}	$7.75 \times T_C - 4.0$	92.9	—	73.5	—	ns

Because of an order from the United States International Trade Commission, BGA-packaged product lines and part numbers indicated here currently are not available from Freescale for import or sale in the United States prior to September 2010: DSP56301

Downloaded from Elcodis.com electronic components distributor

Table 2-14. DRAM Out-of-Page and Refresh Timings, Fifteen Wait States[1, 2] (Continued)

No.	Characteristics[3]	Symbol	Expression	80 MHz		100 MHz		Unit
				Min	Max	Min	Max	
170	$\overline{CAS}$ deassertion pulse width	t_{CP}	$6.25 \times T_C - 6.0$	74.1	—	56.5	—	ns
171	Row address valid to $\overline{RAS}$ assertion	t_{ASR}	$6.25 \times T_C - 4.0$	74.1	—	58.5	—	ns
172	$\overline{RAS}$ assertion to row address not valid	t_{RAH}	$2.75 \times T_C - 4.0$	30.4	—	23.5	—	ns
173	Column address valid to $\overline{CAS}$ assertion	t_{ASC}	$0.75 \times T_C - 4.0$	5.4	—	3.5	—	ns
174	$\overline{CAS}$ assertion to column address not valid	t_{CAH}	$6.25 \times T_C - 4.0$	74.1	—	58.5	—	ns
175	$\overline{RAS}$ assertion to column address not valid	t_{AR}	$9.75 \times T_C - 4.0$	117.9	—	93.5	—	ns
176	Column address valid to $\overline{RAS}$ deassertion	t_{RAL}	$7 \times T_C - 4.0$	83.5	—	66.0	—	ns
177	$\overline{WR}$ deassertion to $\overline{CAS}$ assertion	t_{RCS}	$5 \times T_C - 3.8$	58.7	—	46.2	—	ns
178	$\overline{CAS}$ deassertion to $\overline{WR}$[4] assertion	t_{RCH}	$1.75 \times T_C - 3.7$	18.2	—	13.8	—	ns
179	$\overline{RAS}$ deassertion to $\overline{WR}$[4] assertion	t_{RRH}	**80 MHz**: $0.25 \times T_C - 2.6$ **100 MHz**: $0.25 \times T_C - 2.0$	0.5 —	— —	— 0.5	— —	ns ns
180	$\overline{CAS}$ assertion to $\overline{WR}$ deassertion	t_{WCH}	$6 \times T_C - 4.2$	70.8	—	55.8	—	ns
181	$\overline{RAS}$ assertion to $\overline{WR}$ deassertion	t_{WCR}	$9.5 \times T_C - 4.2$	114.6	—	90.8	—	ns
182	$\overline{WR}$ assertion pulse width	t_{WP}	$15.5 \times T_C - 4.5$	189.3	—	150.5	—	ns
183	$\overline{WR}$ assertion to $\overline{RAS}$ deassertion	t_{RWL}	$15.75 \times T_C - 4.3$	192.6	—	153.2	—	ns
184	$\overline{WR}$ assertion to $\overline{CAS}$ deassertion	t_{CWL}	$14.25 \times T_C - 4.3$	173.8	—	138.2	—	ns
185	Data valid to $\overline{CAS}$ assertion (write)	t_{DS}	$8.75 \times T_C - 4.0$	105.4	—	83.5	—	ns
186	$\overline{CAS}$ assertion to data not valid (write)	t_{DH}	$6.25 \times T_C - 4.0$	74.1	—	58.5	—	ns
187	$\overline{RAS}$ assertion to data not valid (write)	t_{DHR}	$9.75 \times T_C - 4.0$	117.9	—	93.5	—	ns
188	$\overline{WR}$ assertion to $\overline{CAS}$ assertion	t_{WCS}	$9.5 \times T_C - 4.3$	114.5	—	90.7	—	ns
189	$\overline{CAS}$ assertion to $\overline{RAS}$ assertion (refresh)	t_{CSR}	$1.5 \times T_C - 4.0$	14.8	—	11.0	—	ns
190	$\overline{RAS}$ deassertion to $\overline{CAS}$ assertion (refresh)	t_{RPC}	$4.75 \times T_C - 4.0$	55.4	—	43.5	—	ns
191	$\overline{RD}$ assertion to $\overline{RAS}$ deassertion	t_{ROH}	$15.5 \times T_C - 4.0$	189.8	—	151.0	—	ns
192	$\overline{RD}$ assertion to data valid	t_{GA}	**80 MHz**: $14 \times T_C - 6.5$ **100 MHz**: $14 \times T_C - 5.7$	— —	168.5 —	— —	— 134.3	ns ns
193	$\overline{RD}$ deassertion to data not valid[3]	t_{GZ}		0.0	—	0.0	—	ns
194	$\overline{WR}$ assertion to data active		$0.75 \times T_C - 1.5$	9.1	—	6.0	—	ns
195	$\overline{WR}$ deassertion to data high impedance		$0.25 \times T_C$	—	3.1	—	2.5	ns

Notes:
1. The number of wait states for an out-of-page access is specified in the DCR.
2. The refresh period is specified in the DCR.
3. $\overline{RD}$ deassertion always occurs after $\overline{CAS}$ deassertion; therefore, the restricted timing is t_{OFF} and not t_{GZ}.
4. Either t_{RCH} or t_{RRH} must be satisfied for read cycles.

Because of an order from the United States International Trade Commission, BGA-packaged product lines and part numbers indicated here currently are not available from Freescale for import or sale in the United States prior to September 2010: DSP56301

Downloaded from Elcodis.com electronic components distributor

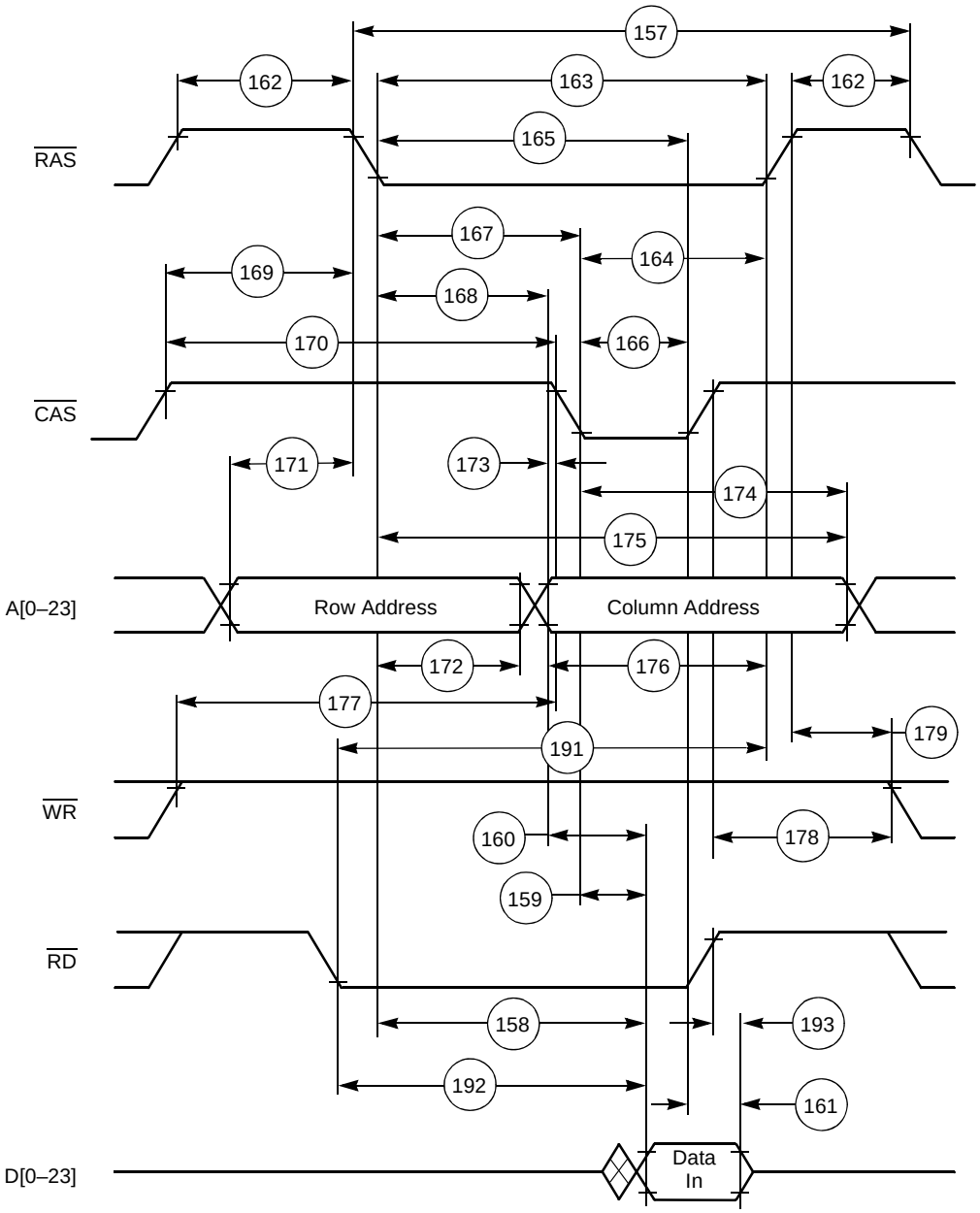

Figure 2-18. DRAM Out-of-Page Read Access

Because of an order from the United States International Trade Commission, BGA-packaged product lines and part numbers indicated here currently are not available from Freescale for import or sale in the United States prior to September 2010: DSP56301

Downloaded from Elcodis.com electronic components distributor

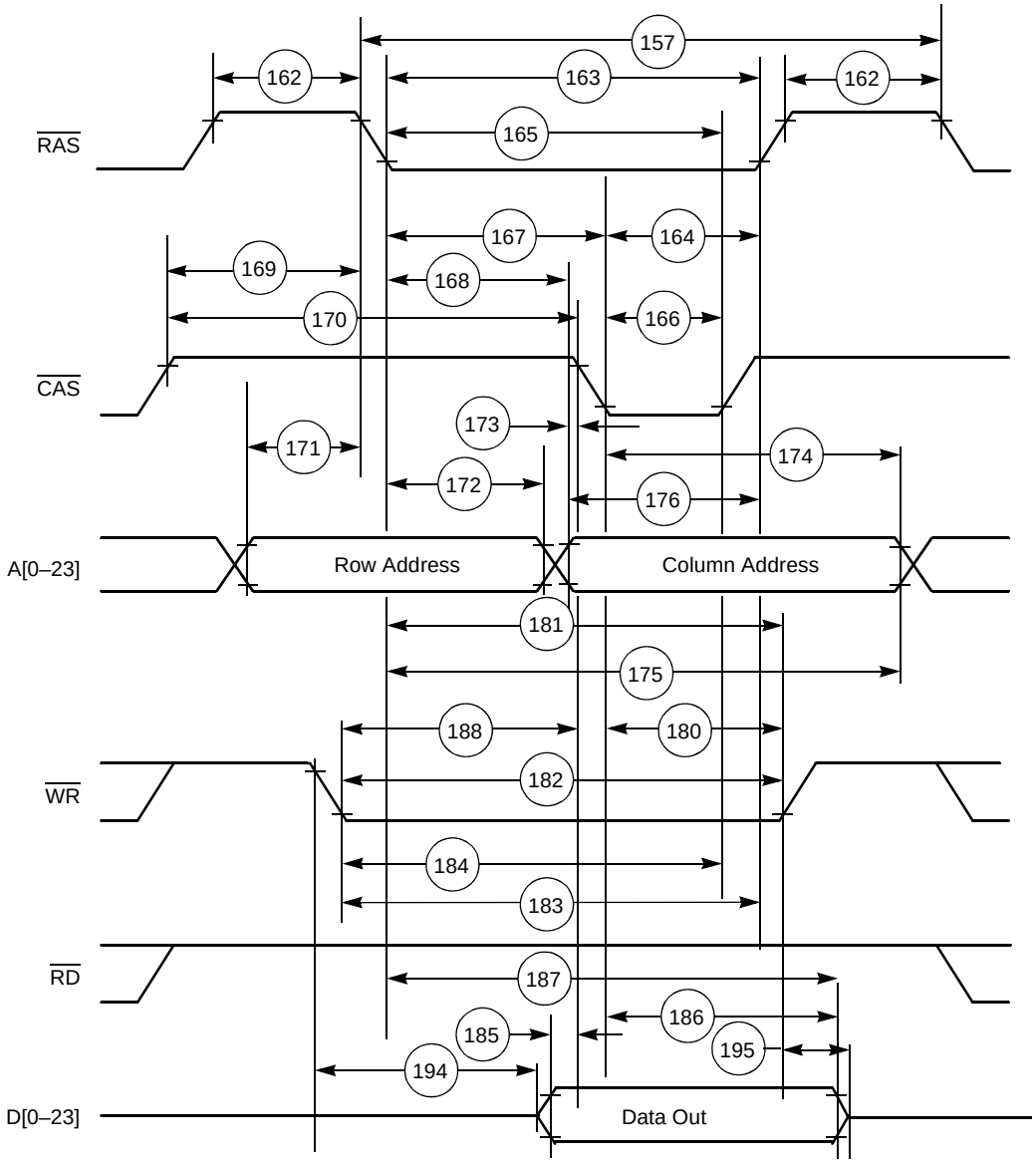

Figure 2-19. DRAM Out-of-Page Write Access

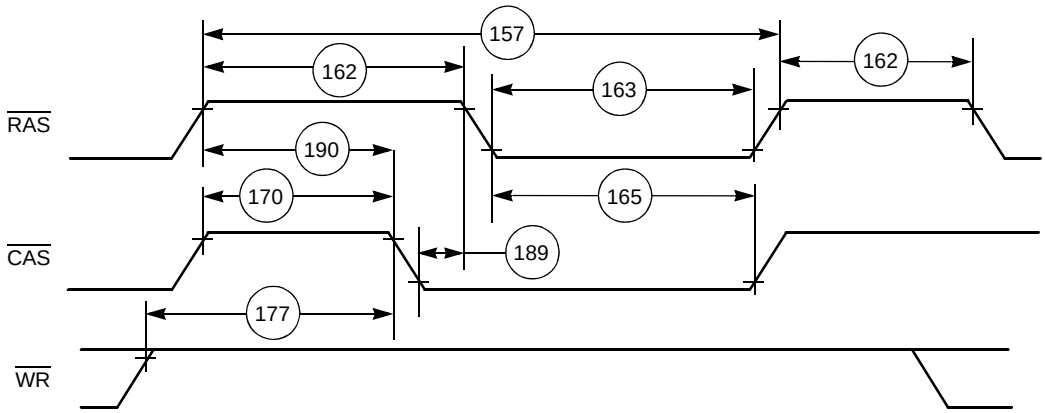

Figure 2-20. DRAM Refresh Access

Because of an order from the United States International Trade Commission, BGA-packaged product lines and part numbers indicated here currently are not available from Freescale for import or sale in the United States prior to September 2010: DSP56301

Downloaded from Elcodis.com electronic components distributor

2.5.5.3 Synchronous Timings (SRAM)

Table 2-15. External Bus Synchronous Timings (SRAM Access)[3]

No.	Characteristics	Expression[1,2]	80 MHz		100 MHz		Unit
			Min	Max	Min	Max	
196	CLKOUT high to $\overline{BS}$ assertion	$0.25 \times T_C$ +5.2/–0.5	2.6	8.3	2.0	7.7	ns
197	CLKOUT high to $\overline{BS}$ deassertion	$0.75 \times T_C$ +4.2/–1.0	8.4	13.6	6.5	11.7	ns
198	CLKOUT high to address, and AA valid[4]	$0.25 \times T_C + 2.5$	—	5.6	—	5.0	ns
199	CLKOUT high to address, and AA invalid[4]	$0.25 \times T_C - 0.7$	2.4	—	1.8	—	ns
200	$\overline{TA}$ valid to CLKOUT high (setup time)		5.8	—	4.0	—	ns
201	CLKOUT high to $\overline{TA}$ invalid (hold time)		0.0	—	0.0	—	ns
202	CLKOUT high to data out active	$0.25 \times T_C$	3.1	—	2.5	—	ns
203	CLKOUT high to data out valid	**80 MHz**: $0.25 \times T_C + 4.5$ **100 MHz**: $0.25 \times T_C + 4.0$	 — —	 7.6 —	 — —	 — 6.5	 ns ns
204	CLKOUT high to data out invalid	$0.25 \times T_C$	3.1	—	2.5	—	ns
205	CLKOUT high to data out high impedance	**80 MHz**: $0.25 \times T_C + 0.5$ **100 MHz**: $0.25 \times T_C$	 — —	 3.6 —	 — —	 — 2.5	 ns ns
206	Data in valid to CLKOUT high (setup)		5.0	—	4.0	—	ns
207	CLKOUT high to data in invalid (hold)		0.0	—	0.0	—	ns
208	CLKOUT high to $\overline{RD}$ assertion	maximum: $0.75 \times T_C + 2.5$	10.4	 11.9	6.7	 10.0	ns ns
209	CLKOUT high to $\overline{RD}$ deassertion		0.0	4.5	0.0	4.0	ns
210	CLKOUT high to $\overline{WR}$ assertion[2]	$0.5 \times T_C + 4.3$ [WS = 1 or WS ≥ 4] [2 ≤ WS ≤ 3]	7.6 1.3	10.6 4.8	4.5 0.0	9.3 4.3	ns ns
211	CLKOUT high to $\overline{WR}$ deassertion		0.0	4.3	0.0	3.8	ns

Notes:
1. WS is the number of wait states specified in the BCR.
2. If WS > 1, $\overline{WR}$ assertion refers to the next rising edge of CLKOUT.
3. External bus synchronous timings should be used only for reference to the clock and *not* for relative timings.
4. T198 and T199 are valid for Address Trace mode if the ATE bit in the Operating Mode Register is set. Use the status of $\overline{BR}$ (See T212) to determine whether the access referenced by A[0–23] is internal or external in this mode.

Because of an order from the United States International Trade Commission, BGA-packaged product lines and part numbers indicated here currently are not available from Freescale for import or sale in the United States prior to September 2010: DSP56301

Downloaded from Elcodis.com electronic components distributor

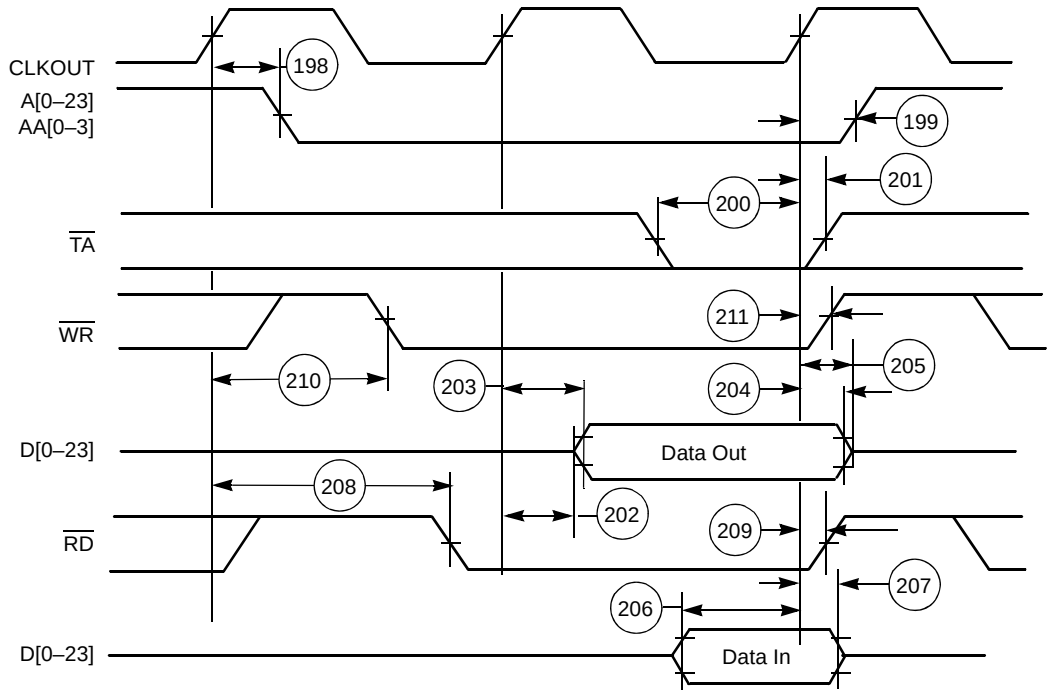

Note: Address lines A[0–23] hold their state after a read or write operation. AA[0–3] do not hold their state after a read or write operation.

Figure 2-21. Synchronous Bus Timings 1 WS (BCR Controlled)

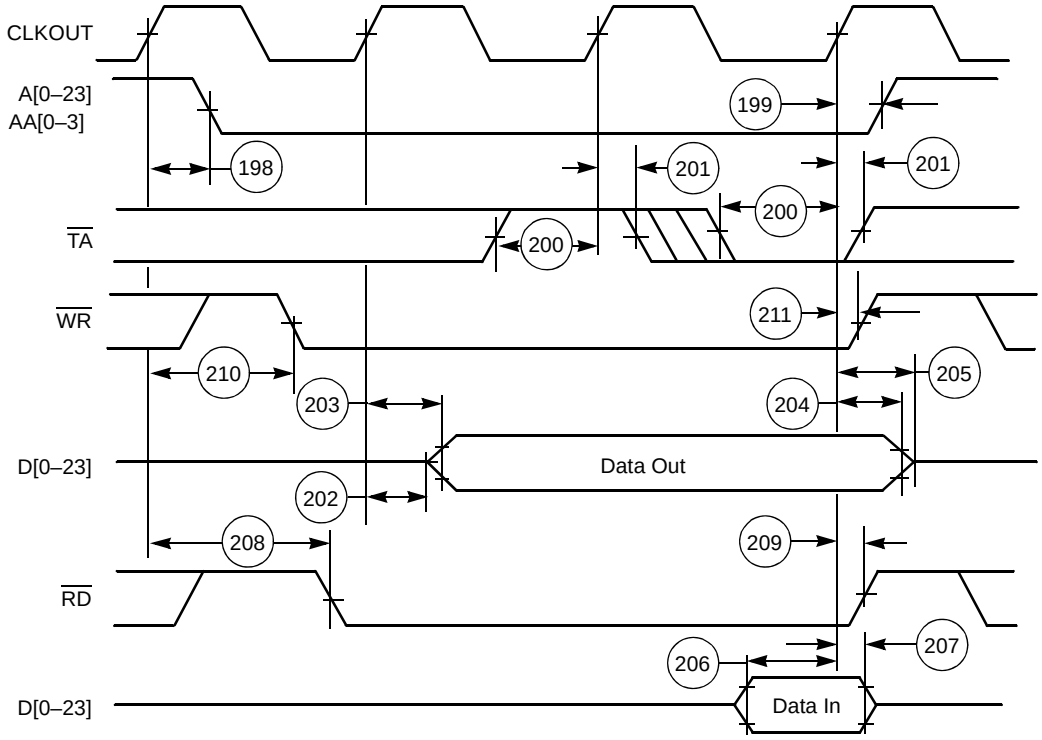

Note: Address lines A[0–23] hold their state after a read or write operation. AA[0–3] do not hold their state after a read or write operation.

Figure 2-22. Synchronous Bus Timings 2 WS ($\overline{TA}$ Controlled)

Because of an order from the United States International Trade Commission, BGA-packaged product lines and part numbers indicated here currently are not available from Freescale for import or sale in the United States prior to September 2010: DSP56301

Downloaded from Elcodis.com electronic components distributor

2.5.5.4 Arbitration Timings

Table 2-16. Arbitration Bus Timings[1].

No.	Characteristics	Expression[2]	80 MHz		100 MHz		Unit
			Min	Max	Min	Max	
212	CLKOUT high to $\overline{BR}$ assertion/deassertion[3]		1.0	4.5	0.0	4.0	ns
213	$\overline{BG}$ asserted/deasserted to CLKOUT high (setup)		5.0	—	4.0	—	ns
214	CLKOUT high to $\overline{BG}$ deasserted/asserted (hold)		0.0	—	0.0	—	ns
215	$\overline{BB}$ deassertion to CLKOUT high (input setup)		5.0	—	4.0	—	ns
216	CLKOUT high to $\overline{BB}$ assertion (input hold)		0.0	—	0.0	—	ns
217	CLKOUT high to $\overline{BB}$ assertion (output)		1.0	4.5	0.0	4.0	ns
218	CLKOUT high to $\overline{BB}$ deassertion (output)		1.0	4.5	0.0	4.0	ns
219	$\overline{BB}$ high to $\overline{BB}$ high impedance (output)		—	5.6	—	4.5	ns
220	CLKOUT high to address and controls active	$0.25 \times T_C$	3.1	—	2.5	—	ns
221	CLKOUT high to address and controls high impedance	$0.75 \times T_C$	—	9.4	—	7.5	ns
222	CLKOUT high to AA active	$0.25 \times T_C$	3.1	—	2.5	—	ns
223	CLKOUT high to AA deassertion	maximum: $0.25 \times T_C + 4.0$	4.1	7.1	2.0	6.5	ns
224	CLKOUT high to AA high impedance	$0.75 \times T_C$	—	9.4	—	7.5	ns

Notes:
1. Synchronous Bus Arbitration is not recommended. Use Asynchronous mode whenever possible.
2. An expression is used to compute the maximum or minimum value listed, as appropriate. For timing 223, the minimum is an absolute value.
3. T212 is valid for Address Trace mode when the ATE bit in the Operating Mode Register is set. $\overline{BR}$ is deasserted for internal accesses and asserted for external accesses.

Because of an order from the United States International Trade Commission, BGA-packaged product lines and part numbers indicated here currently are not available from Freescale for import or sale in the United States prior to September 2010: DSP56301

Downloaded from Elcodis.com electronic components distributor

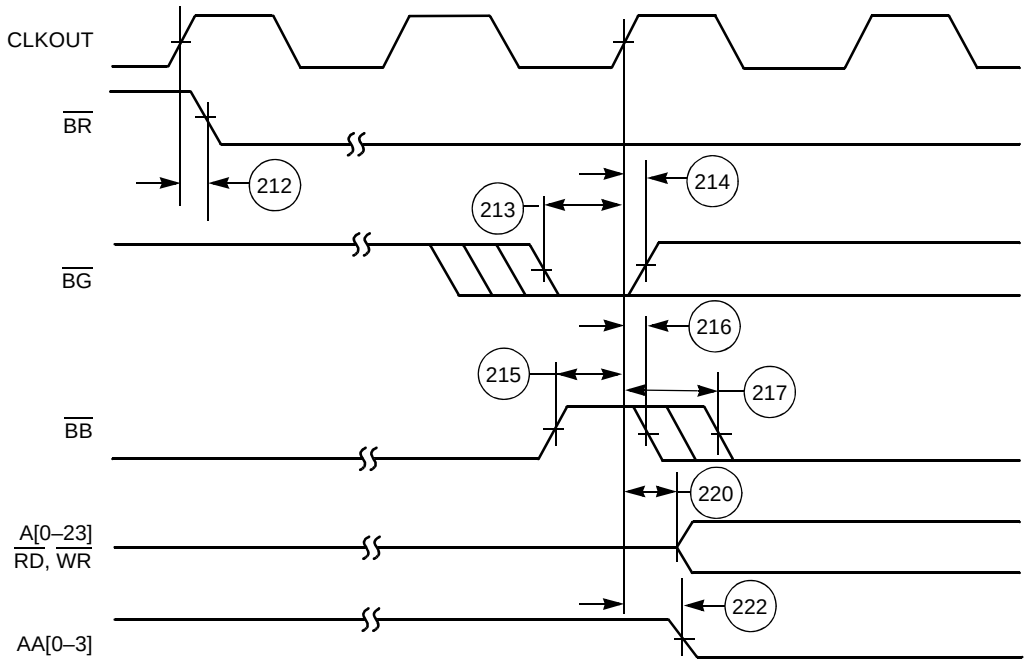

Note: Address lines A[0–23] hold their state after a read or write operation. AA[0–3] do not hold their state after a read or write operation.

Figure 2-23. Bus Acquisition Timings

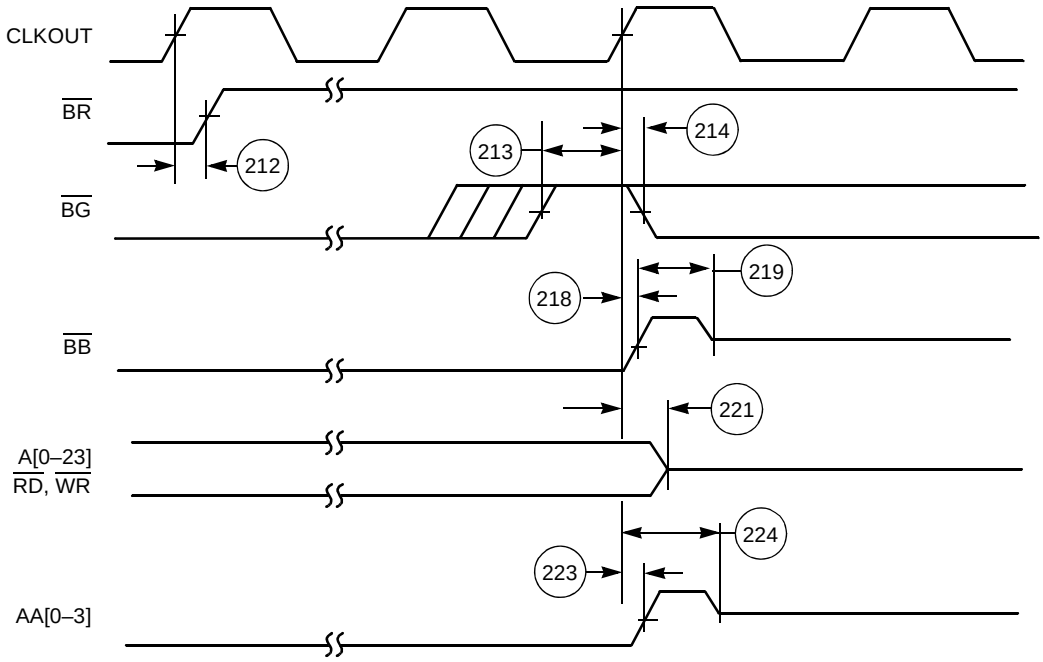

Note: Address lines A[0–23] hold their state after a read or write operation. AA[0–3] do not hold their state after a read or write operation.

Figure 2-24. Bus Release Timings Case 1 (BRT Bit in Operating Mode Register Cleared)

Because of an order from the United States International Trade Commission, BGA-packaged product lines and part numbers indicated here currently are not available from Freescale for import or sale in the United States prior to September 2010: DSP56301

Downloaded from Elcodis.com electronic components distributor

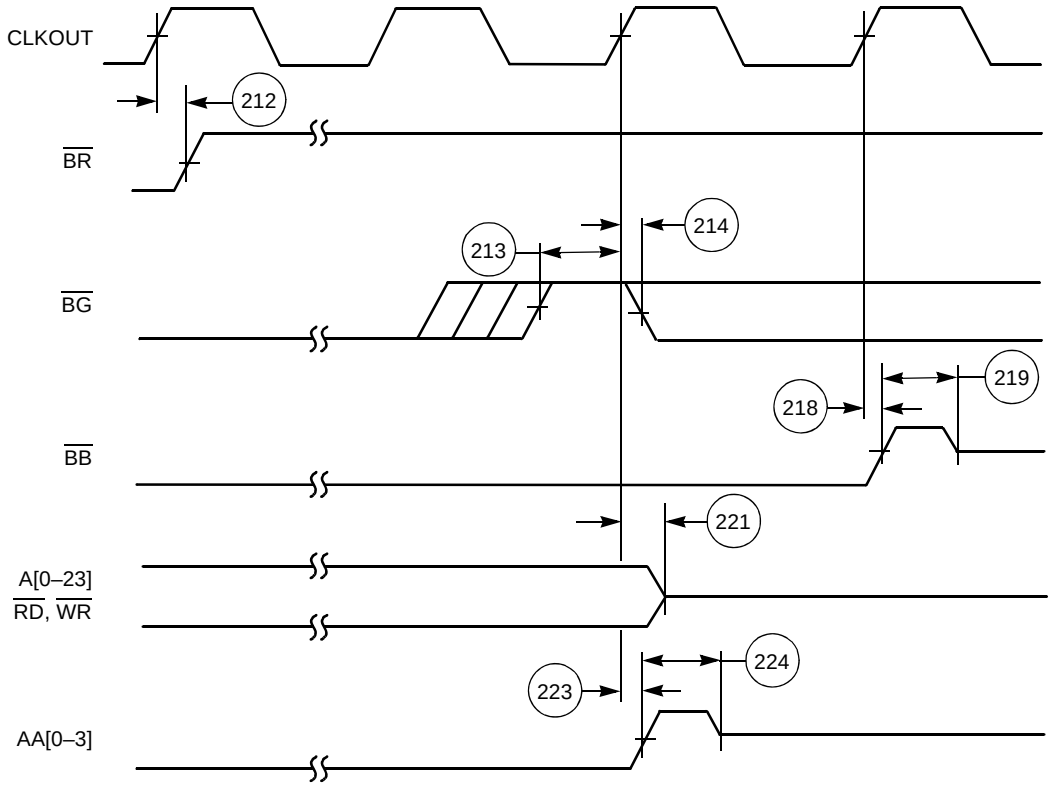

Note: Address lines A[0–23] hold their state after a read or write operation. AA[0–3] do not hold their state after a read or write operation.

Figure 2-25. Bus Release Timings Case 2 (BRT Bit in Operating Mode Register Set)

2.5.5.5 Asynchronous Bus Arbitrations Timings

Table 2-17. Asynchronous Bus Arbitration Timing[1,3]

No.	Characteristics	Expression	80 MHz		100 MHz[2]		Unit
			Min	Max	Min	Max	
250	$\overline{BB}$ assertion window from $\overline{BG}$ input deassertion[4]	2.5 × Tc + 5	—	25	—	30	ns
251	Delay from $\overline{BB}$ assertion to $\overline{BG}$ assertion[4]	2 × Tc + 5	25	—	25	—	ns

Notes:
1. Bit 13 in the Operating Mode Register must be set to enter Asynchronous Arbitration mode.
2. Asynchronous Arbitration mode is recommended for operation at 100 MHz.
3. If Asynchronous Arbitration mode is active, none of the timings in **Table 2-16** is required.
4. In order to guarantee timings 250, and 251, $\overline{BG}$ inputs must be asserted to different DSP56300 devices on the same bus in the non-overlap manner shown in **Figure 2-26**.

Because of an order from the United States International Trade Commission, BGA-packaged product lines and part numbers indicated here currently are not available from Freescale for import or sale in the United States prior to September 2010: DSP56301

Downloaded from Elcodis.com electronic components distributor

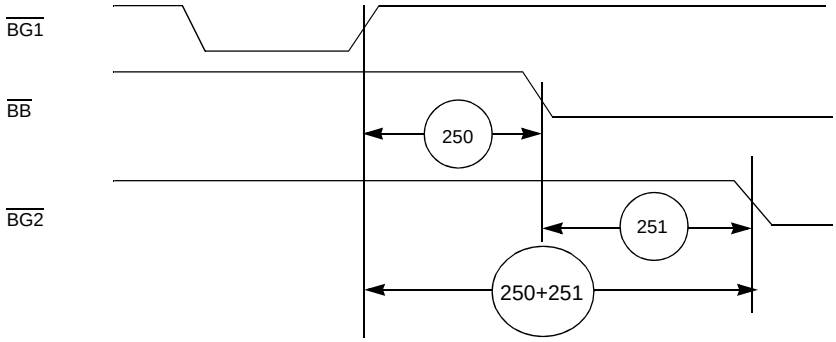

Figure 2-26. Asynchronous Bus Arbitration Timing

The asynchronous bus arbitration is enabled by internal $\overline{BB}$ inputs and synchronization circuits on $\overline{BG}$. These synchronization circuits add delay from the external signal until it is exposed to internal logic. As a result of this delay, a DSP56300 part can assume mastership and assert $\overline{BB}$, for some time after $\overline{BG}$ is deasserted. Timing 250 defines when $\overline{BB}$ can be asserted.

Once $\overline{BB}$ is asserted, there is a synchronization delay from $\overline{BB}$ assertion to the time this assertion is exposed to other DSP56300 components which are potential masters on the same bus. If $\overline{BG}$ input is asserted before that time, a situation of $\overline{BG}$ asserted, and $\overline{BB}$ deasserted, can cause another DSP56300 component to assume mastership at the same time. Therefore, a non-overlap period between one $\overline{BG}$ input active to another $\overline{BG}$ input active is required. Timing 251 ensures that such a situation is avoided.

2.5.6 Host Interface Timing

Table 2-18. Universal Bus Mode Timing Parameters

No.	Characteristic	Expression	80 MHz		100 MHz		Unit
			Min	Max	Min	Max	
300	Access Cycle Time	$3 \times T_C$	37.5	—	30.0	—	ns
301	HA[10–0], HAEN Setup to Data Strobe Assertion[1]		5.8	—	4.6	—	ns
302	HA[10–0], HAEN Valid Hold from Data Strobe Deassertion[1]		0.0	—	0.0	—	ns
303	HRW Setup to $\overline{HDS}$ Assertion[2]		5.8	—	4.6	—	ns
304	HRW Valid Hold from $\overline{HDS}$ Deassertion[2]		0.0	—	0.0	—	ns
305	Data Strobe Deasserted Width[1]		4.1	—	3.3	—	ns
306	Data Strobe Asserted Pulse Width[1]	**80 MHz:** $2.5 \times T_C + 1.7$ **100 MHz:** $2.5 \times T_C + 1.3$	32.9	—	 26.3	 —	ns ns
307	$\overline{HBS}$ Asserted Pulse Width		2.5	—	2.0	—	ns
308	$\overline{HBS}$ Assertion to Data Strobe Assertion[1]	**80 MHz:** $T_C - 4.9$ **100 MHz:** $T_C - 4.0$	—	7.6	 —	 6.0	ns ns
309	$\overline{HBS}$ Assertion to Data Strobe Deassertion[1]	**80 MHz:** $2.5 \times T_C + 2.9$ **100 MHz:** $2.5 \times T_C + 2.3$	34.1	—	 27.3	 —	ns ns
310	$\overline{HBS}$ Deassertion to Data Strobe Deassertion[1]	**80 MHz:** $1.5 \times T_C + 3.3$ **100 MHz:** $1.5 \times T_C + 2.6$	22.1	—	 17.6	 —	ns ns
311	Data Out Valid to TA Assertion ($\overline{HBS}$ Not Used—Tied to V_{CC})[2]	**80 MHz:** $2 \times T_C - 11.6$ **100 MHz:** $2 \times T_C - 9.2$	13.4	—	 10.8	 —	ns ns
312	Data Out Active from Read Data Strobe Assertion[3]		1.7	—	1.3	—	ns

Because of an order from the United States International Trade Commission, BGA-packaged product lines and part numbers indicated here currently are not available from Freescale for import or sale in the United States prior to September 2010: DSP56301

Downloaded from Elcodis.com electronic components distributor

Table 2-18. Universal Bus Mode Timing Parameters (Continued)

No.	Characteristic	Expression	80 MHz		100 MHz		Unit
			Min	Max	Min	Max	
313	Data Out Valid from Read Data Strobe Assertion (No Wait States Inserted—$\overline{HTA}$ Asserted)[3]		—	18.9	—	16.9	ns
314	Data Out Valid Hold from Read Data Strobe Deassertion[3]		1.7	—	1.3	—	ns
315	Data Out High Impedance from Read Data Strobe Deassertion[3]		—	12.0	—	9.6	ns
316	Data In Valid Setup to Write Data Strobe Deassertion[4]		8.3	—	6.6	—	ns
317	Data In Valid Hold from Write Data Strobe Deassertion[4]		0.0	—	0.0	—	ns
318	$\overline{HSAK}$ Assertion from Data Strobe Assertion[1]		—	30.0	—	30.0	ns
319	$\overline{HSAK}$ Asserted Hold from Data Strobe Deassertion[1]		2.0	—	2.0	—	ns
320	$\overline{HTA}$ Active from Data Strobe Assertion[1,2,5]		3.1	—	2.5	—	ns
321	$\overline{HTA}$ Assertion from Data Strobe Assertion ($\overline{HBS}$ Not Used—Tied to V_{CC})[1,2,5]	**80 MHz:** $2.0 \times T_C + 13.0$ **100 MHz:** $2.0 \times T_C + 12.2$	38.0	—	32.2	—	ns ns
322	$\overline{HTA}$ Assertion from $\overline{HBS}$ Assertion[2,5]	**80 MHz:** $2.0 \times T_C + 13.0$ **100 MHz:** $2.0 \times T_C + 12.2$	38.0	—	32.2	—	ns ns
323	$\overline{HTA}$ Deasserted from Data Strobe Assertion[1,2,5]		—	17.1	—	15.0	ns
324	$\overline{HTA}$ Assertion to Data Strobe Deassertion[1,2]		0.0	—	0.0	—	ns
325	$\overline{HTA}$ High Impedance from Data Strobe Deassertion[1,2]		—	15.3	—	12.2	ns
326	$\overline{HIRQ}$ Asserted Pulse Width (HIRH = 0, HIRD = 1)	$(LT + 1) \times T_C - 6.0$[7]	19.0	—	14.0	—	ns
327	Data Strobe Deasserted Hold from $\overline{HIRQ}$ Deassertion (HIRH = 0)[1]		0.0	—	0.0	—	ns
328	$\overline{HIRQ}$ Asserted Hold from Data Strobe Assertion (HIRH = 1)[1]	$1.5 \times T_C$	18.8	—	15.0	—	ns
329	$\overline{HIRQ}$ Deassertion from Data Strobe Assertion (HIRH = 1, HIRD = 1)[1]	**80 MHz:** $2.5 \times T_C + 24.7$ 100 MHz: $2.5 \times T_C + 21.5$	—	55.9	—	46.5	ns ns
330	$\overline{HIRQ}$ High Impedance from Data Strobe Assertion (HIRH = 1, HIRD = 0)[1,6]	**80 MHz:** $2.5 \times T_C + 24.7$ **100 MHz:** $2.5 \times T_C + 21.5$	—	55.9	—	46.5	ns ns
331	$\overline{HIRQ}$ Active from Data Strobe Deassertion (HIRH = 1, HIRD = 0)[1]	$2.5 \times T_C$	31.3	—	25.0	—	ns
332	$\overline{HIRQ}$ Deasserted Hold from Data Strobe Deassertion[1]	$2.5 \times T_C$	31.3	—	25.0	—	ns
333	HDRQ[2] Asserted Hold from Data Strobe Assertion[1]	$1.5 \times T_C$	18.8	—	15.0	—	ns
334	HDRQ[2] Deassertion from Data Strobe Assertion[1]	**80 MHz:** $2.5 \times T_C + 24.7$ **100 MHz:** $2.5 \times T_C + 21.5$	—	55.9	—	46.5	ns ns
335	HDRQ[2] Deasserted Hold from Data Strobe Deassertion[1]	**80 MHz:** $2.5 \times T_C + 3.7$ **100 MHz:** $2.5 \times T_C + 3.0$	35.0	—	28.0	—	ns ns
336	$\overline{HDAK}$ Assertion to Data Strobe Assertion[1]		5.8	—	4.6	—	ns
337	$\overline{HDAK}$ Asserted Hold from Data Strobe Deassertion[1]		0.0	—	0.0	—	ns
338	$\overline{HDBEN}$ Deasserted Hold from Data Strobe Assertion[1]		2.5	—	2.0	—	ns
339	$\overline{HDBEN}$ Assertion from Data Strobe Assertion[1]		—	22.2	—	19.6	ns
340	$\overline{HDBEN}$ Asserted Hold from Data Strobe Deassertion[1]		2.5	—	2.0	—	ns
341	$\overline{HDBEN}$ Deassertion from Data Strobe Deassertion[1]		—	22.2	—	19.6	ns
342	HDBDR High Hold from Read Data Strobe Assertion[3]		2.5	—	2.0	—	ns
343	HDBDR Low from Read Data Strobe Assertion[3]		—	22.2	—	19.6	ns
344	HDBDR Low Hold from Read Data Strobe Deassertion[3]		2.5	—	2.0	—	ns

Because of an order from the United States International Trade Commission, BGA-packaged product lines and part numbers indicated here currently are not available from Freescale for import or sale in the United States prior to September 2010: DSP56301

Downloaded from Elcodis.com electronic components distributor

Table 2-18. Universal Bus Mode Timing Parameters (Continued)

No.	Characteristic	Expression	80 MHz		100 MHz		Unit
			Min	Max	Min	Max	
345	HDBDR High from Read Data Strobe Deassertion[3]		—	22.2	—	19.6	ns
346	HRST Assertion to Host Port Pins High Impedance[2]		—	22.2	—	19.6	ns

Notes:
1. The Data Strobe is $\overline{\text{HRD}}$ or $\overline{\text{HWR}}$ in the Dual Data Strobe mode and $\overline{\text{HDS}}$ in the Single Data Strobe mode.
2. $\overline{\text{HTA}}$, HDRQ, and HRST may be programmed as active-high or active-low. In the example timing diagrams, HDRQ and HRST are shown as active-high and $\overline{\text{HTA}}$ is shown as active low.
3. The Read Data Strobe is $\overline{\text{HRD}}$ in the Dual Data Strobe mode and $\overline{\text{HDS}}$ in the Single Data Strobe mode.
4. The Write Data Strobe is $\overline{\text{HWR}}$ in the Dual Data Strobe mode and $\overline{\text{HDS}}$ in the Single Data Strobe mode.
5. $\overline{\text{HTA}}$ requires an external pull-down resistor if programmed as active high (HTAP = 0); or an external pull-up resistor if programmed as active low (HTAP = 1). The resistor value should be consistent with the DC specifications.
6. $\overline{\text{HIRQ}}$ requires an external pull-up resistor if programmed as open drain (HIRD = 0). The resistor value should be consistent with the DC specifications.
7. "LT" is the value of the latency timer register (CLAT) as programmed by the user during self configuration. LT ≥ 1.
8. Values are valid for $V_{CC} = 3.3 \pm 0.3V$

Table 2-19. Universal Bus Mode, Synchronous Port A Type Host Timing

No.	Characteristic	Expression	80 MHz		100 MHz		Unit
			Min	Max	Min	Max	
300	Access Cycle Time	$3 \times T_C$	37.5	—	30.0	—	ns
301	HA[10–0], HAEN Setup to Data Strobe Assertion[1]		5.8	—	4.6	—	ns
302	HA[10–0], HAEN Valid Hold from Data Strobe Deassertion[1]		0.0	—	0.0	—	ns
305	Data Strobe Deasserted Width[1]		4.1	—	3.3	—	ns
307	$\overline{\text{HBS}}$ Asserted Pulse Width		2.5	—	2.0	—	ns
308	$\overline{\text{HBS}}$ Assertion to Data Strobe Assertion[1]	**80 MHz:** $T_C - 4.9$ **100 MHz:** $T_C - 4.0$	—	7.6	—	6.0	ns ns
309	$\overline{\text{HBS}}$ Assertion to Data Strobe Deassertion[1]	**80 MHz:** $2.5 \times T_C + 2.9$ **100 MHz:** $2.5 \times T_C + 2.3$	34.1	—	27.3	—	ns ns
310	$\overline{\text{HBS}}$ Deassertion to Data Strobe Deassertion[1]	**80 MHz:** $1.5 \times T_C + 3.3$ **100 MHz:** $1.5 \times T_C + 2.6$	22.1	—	17.6	—	ns ns
312	Data Out Active from Read Data Strobe Assertion[3]		1.7	—	1.3	—	ns
313	Data Out Valid from Read Data Strobe Assertion (No Wait States Inserted—$\overline{\text{HTA}}$ Asserted)[3]		—	18.9	—	16.9	ns
314	Data Out Valid Hold from Read Data Strobe Deassertion$_3$		1.7	—	1.3	—	ns
315	Data Out High Impedance from Read Data Strobe Deassertion[3]		—	12.0	—	9.6	ns
316	Data In Valid Setup to Write Data Strobe Deassertion[4]		8.3	—	6.6	—	ns
317	Data In Valid Hold from Write Data Strobe Deassertion[4]		0.0	—	0.0	—	ns
324	$\overline{\text{HTA}}$ Assertion to Data Strobe Deassertion[1,2]		0.0	—	0.0	—	ns
325	$\overline{\text{HTA}}$ High Impedance from Data Strobe Deassertion[1,2]		—	15.3	—	12.2	ns
326	$\overline{\text{HIRQ}}$ Asserted Pulse Width (HIRH = 0, HIRD = 1)	$(LT + 1) \times T_C - 6.0$[7]	6.5	—	4.0	—	ns
327	Data Strobe Deasserted Hold from $\overline{\text{HIRQ}}$ Deassertion (HIRH = 0)[1]		0.0	—	0.0	—	ns
328	$\overline{\text{HIRQ}}$ Asserted Hold from Data Strobe Assertion (HIRH = 1)[1]	$1.5 \times T_C$	18.8	—	15.0	—	ns
329	$\overline{\text{HIRQ}}$ Deassertion from Data Strobe Assertion (HIRH = 1, HIRD = 1)[1]	**80 MHz:** $2.5 \times T_C + 24.7$ **100 MHz:** $2.5 \times T_C + 21.5$	—	55.9	—	46.5	ns ns

Because of an order from the United States International Trade Commission, BGA-packaged product lines and part numbers indicated here currently are not available from Freescale for import or sale in the United States prior to September 2010: DSP56301

Downloaded from Elcodis.com electronic components distributor

Table 2-19. Universal Bus Mode, Synchronous Port A Type Host Timing (Continued)

No.	Characteristic	Expression	80 MHz		100 MHz		Unit
			Min	Max	Min	Max	
330	$\overline{\text{HIRQ}}$ High Impedance from Data Strobe Assertion (HIRH = 1, HIRD = 0)[1,6]	**80 MHz:** $2.5 \times T_C + 24.7$ **100 MHz:** $2.5 \times T_C + 21.5$	—	55.9	—	46.5	ns ns
331	$\overline{\text{HIRQ}}$ Active from Data Strobe Deassertion (HIRH = 1, HIRD = 0)[1]	$2.5 \times T_C$	31.3	—	25.0	—	ns
332	$\overline{\text{HIRQ}}$ Deasserted Hold from Data Strobe Deassertion[1]	$2.5 \times T_C$	31.3	—	25.0	—	ns
346	HRST Assertion to Host Port Pins High Impedance[2]		—	22.2	—	19.6	ns
347	$\overline{\text{HBS}}$ Assertion to CLKOUT Rising Edge		4.3	—	3.4	—	ns
348	Data Strobe Deassertion to CLKOUT Rising Edge[1]		7.4	—	5.9	—	ns

Notes:
1. The Data Strobe is $\overline{\text{HRD}}$ or $\overline{\text{HWR}}$ in the Dual Data Strobe mode and $\overline{\text{HDS}}$ in the Single Data Strobe mode.
2. $\overline{\text{HTA}}$, HDRQ, and HRST may be programmed as active-high or active-low. In the example timing diagrams, HDRQ and HRST are shown as active-high and $\overline{\text{HTA}}$ is shown as active low.
3. The Read Data Strobe is $\overline{\text{HRD}}$ in the Dual Data Strobe mode and $\overline{\text{HDS}}$ in the Single Data Strobe mode.
4. The Write Data Strobe is $\overline{\text{HWR}}$ in the Dual Data Strobe mode and $\overline{\text{HDS}}$ in the Single Data Strobe mode.
5. $\overline{\text{HTA}}$ requires an external pull-down resistor if programmed as active high (HTAP = 0); or an external pull-up resistor if programmed as active low (HTAP = 1). The resistor value should be consistent with the DC specifications.
6. $\overline{\text{HIRQ}}$ requires an external pull-up resistor if programmed as open drain (HIRD = 0). The resistor value should be consistent with the DC specifications.
7. "LT" is the value of the latency timer register (CLAT) as programmed by the user during self configuration.
8. Values are valid for $V_{CC} = 3.3 \pm 0.3V$

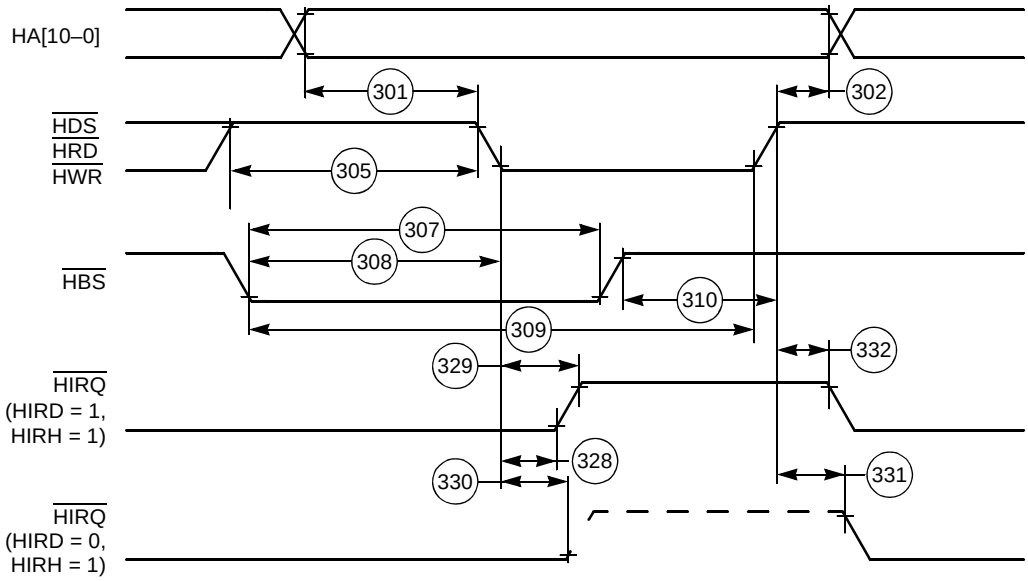

Figure 2-27. Universal Bus Mode I/O Access Timing

Because of an order from the United States International Trade Commission, BGA-packaged product lines and part numbers indicated here currently are not available from Freescale for import or sale in the United States prior to September 2010: DSP56301

Downloaded from Elcodis.com electronic components distributor

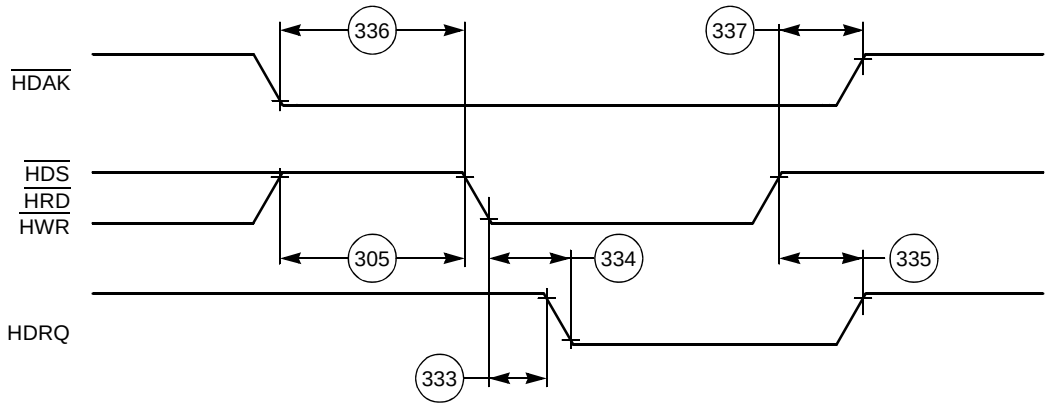

Figure 2-28. Universal Bus Mode DMA Access Timing

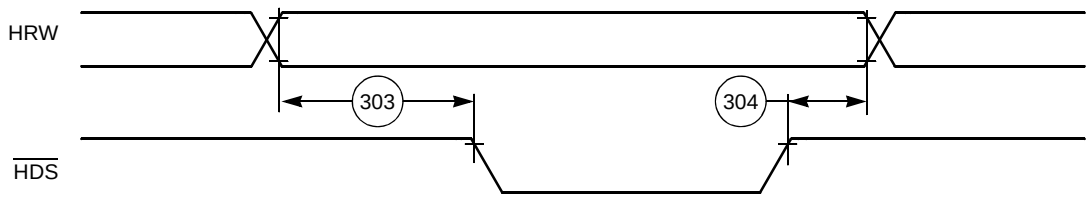

Figure 2-29. HRW to $\overline{\text{HDS}}$ Timing

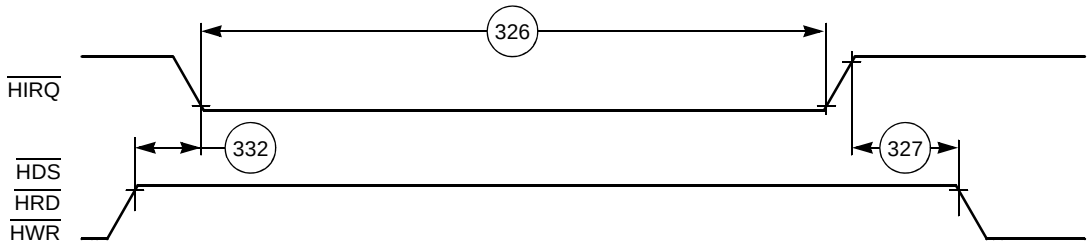

Figure 2-30. $\overline{\text{HIRQ}}$ Pulse Width (HIRH = 0)

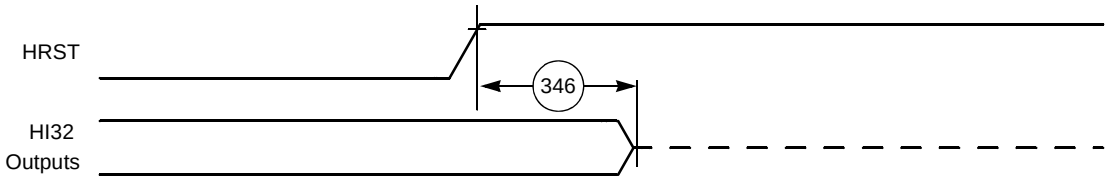

Figure 2-31. HRST Timing

Because of an order from the United States International Trade Commission, BGA-packaged product lines and part numbers indicated here currently are not available from Freescale for import or sale in the United States prior to September 2010: DSP56301

Downloaded from Elcodis.com electronic components distributor

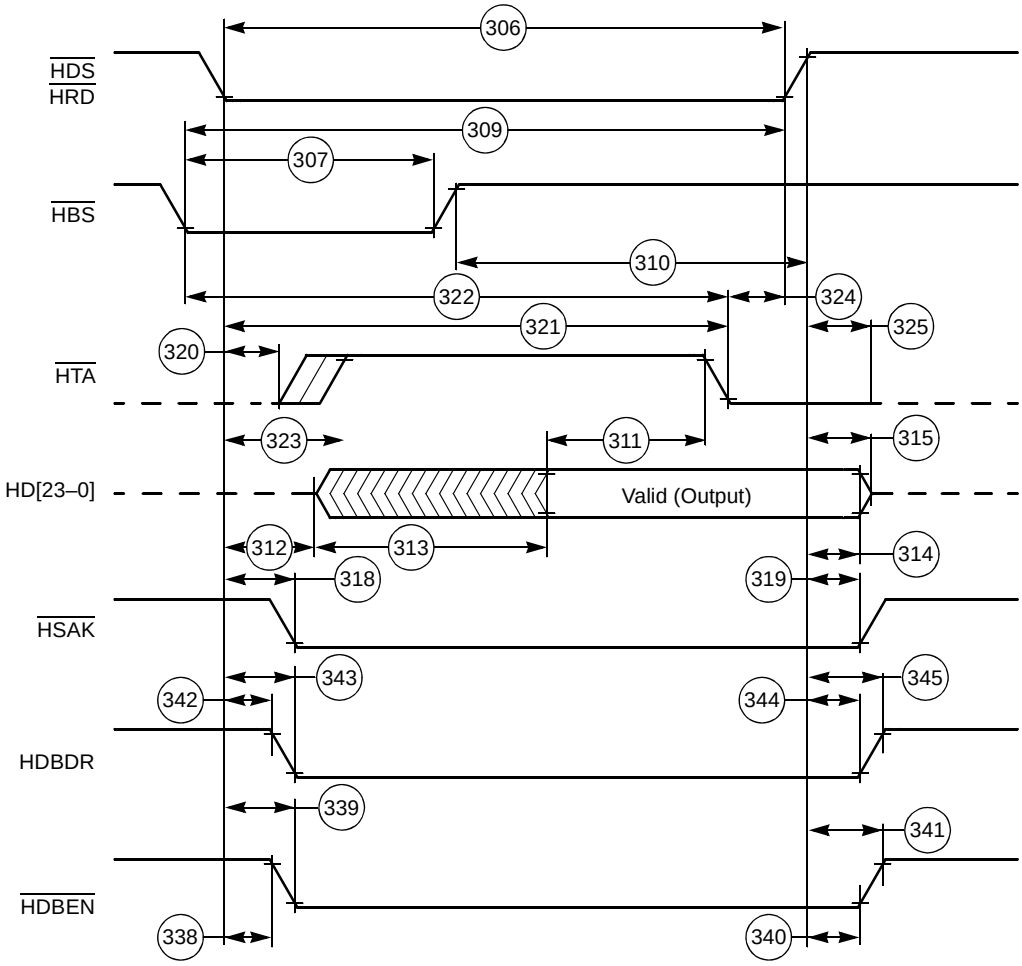

Figure 2-32. Read Timing

Because of an order from the United States International Trade Commission, BGA-packaged product lines and part numbers indicated here currently are not available from Freescale for import or sale in the United States prior to September 2010: DSP56301

Downloaded from Elcodis.com electronic components distributor

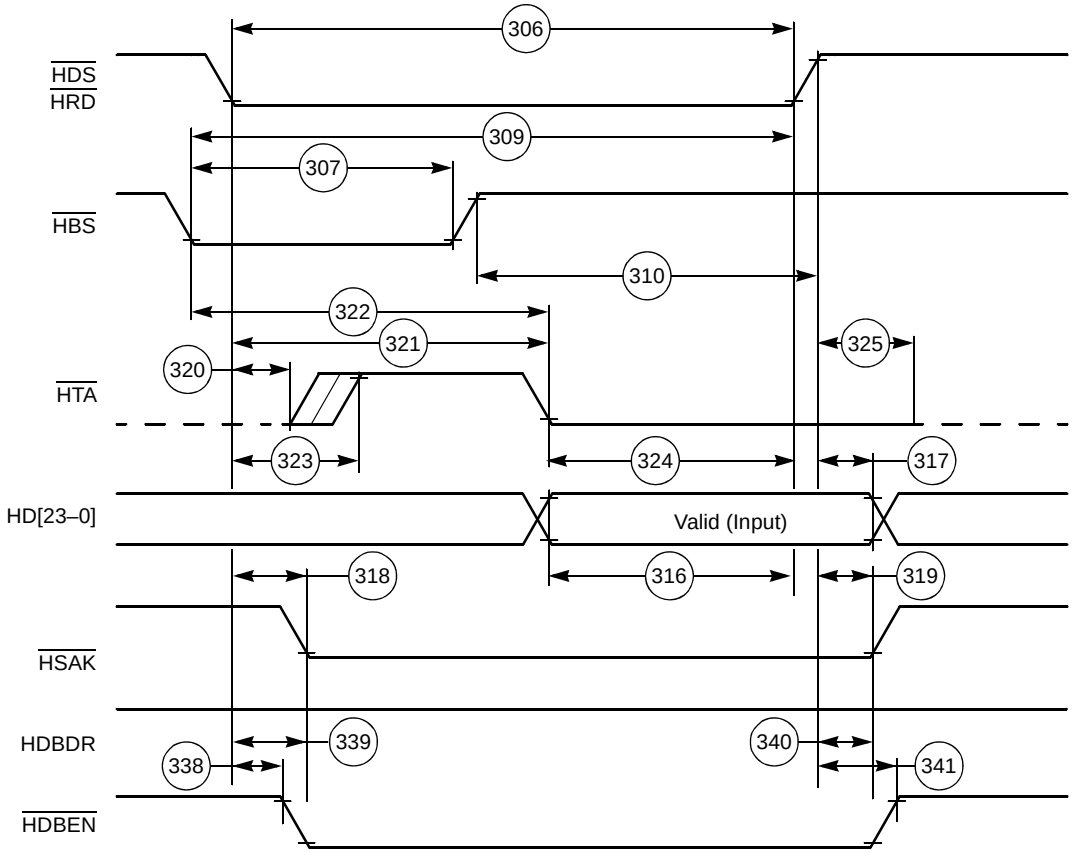

Figure 2-33. Write Timing

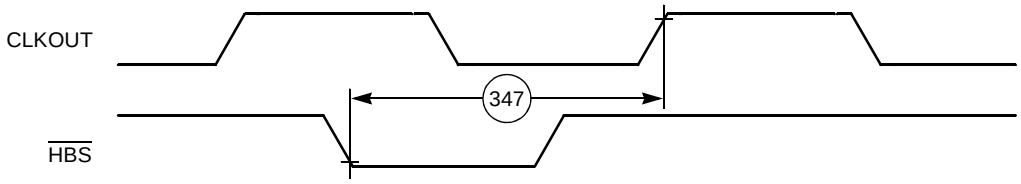

Figure 2-34. $\overline{\text{HBS}}$ Synchronous Timing

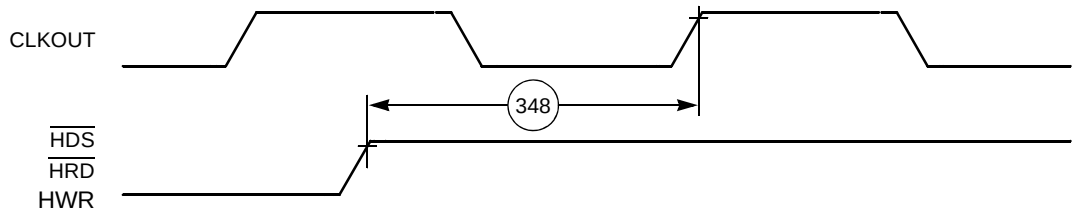

Figure 2-35. Data Strobe Synchronous Timing

Because of an order from the United States International Trade Commission, BGA-packaged product lines and part numbers indicated here currently are not available from Freescale for import or sale in the United States prior to September 2010: DSP56301

Downloaded from Elcodis.com electronic components distributor

Table 2-20. PCI Mode Timing Parameters[1]

No.	Characteristic[10]	Symbol	80 MHz		100 MHz		Unit
			Min	Max	Min	Max	
349	HCLK to Signal Valid Delay—Bussed Signals	t_{VAL}	2.0	11.0	2.0	11.0	ns
350	HCLK to Signal Valid Delay—Point to Point	$t_{VAL(ptp)}$	2.0	12.0	2.0	12.0	ns
351	Float to Active Delay	t_{ON}	2.0	—	2.0	—	ns
352	Active to Float Delay	t_{OFF}	—	28.0	—	28.0	ns
353	Input Set Up Time to HCLK—Bussed Signals	t_{SU}	7.0	—	7.0	—	ns
354	Input Set Up Time to HCLK—Point to Point	$t_{SU(ptp)}$	10.0, 12.0	—	10.0, 12.0	—	ns
355	Input Hold Time from HCLK	t_H	0.0	—	0.0	—	ns
356	Reset Active Time After Power Stable	t_{RST}	1.0	—	1.0	—	ms
357	Reset Active Time After HCLK Stable	$t_{RST\text{-}CLK}$	100.0	—	100.0	—	µs
358	Reset Active to Output Float Delay	$t_{RST\text{-}OFF}$	—	40.0	—	40.0	ns
359	HCLK Cycle Time	t_{CYC}	30.0	—	30.0	—	ns
360	HCLK High Time	t_{HIGH}	11.0	—	11.0	—	ns
361	HCLK Low Time	t_{LOW}	11.0	—	11.0	—	ns

Notes:
1. For standard PCI timing, see the *PCI Local Bus Specification*, Rev. 2.0, especially Chapters 3 and 4.
2. The HI32 supports these timings for a PCI bus operating at 33 MHz for a DSP clock frequency of 56 MHz and above. The DSP core operating frequency should be greater than 5/3 of the PCI bus frequency to maintain proper PCI operation.
3. $\overline{\text{HGNT}}$ has a setup time of 10 ns. $\overline{\text{HREQ}}$ has a setup time of 12 ns.

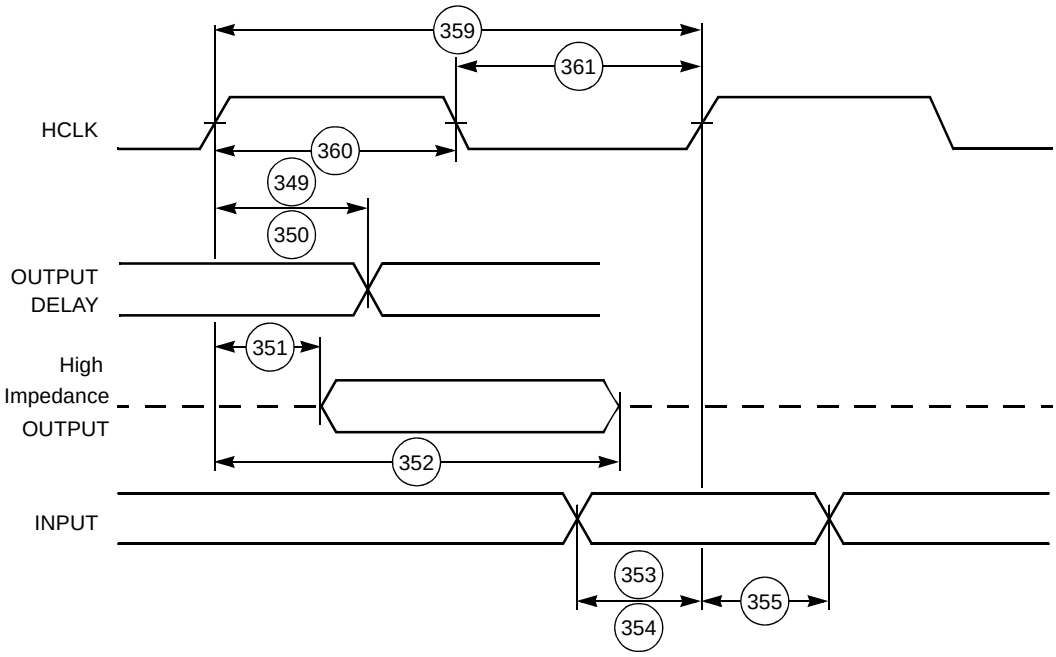

Figure 2-36. PCI Timing

Because of an order from the United States International Trade Commission, BGA-packaged product lines and part numbers indicated here currently are not available from Freescale for import or sale in the United States prior to September 2010: DSP56301

Downloaded from Elcodis.com electronic components distributor

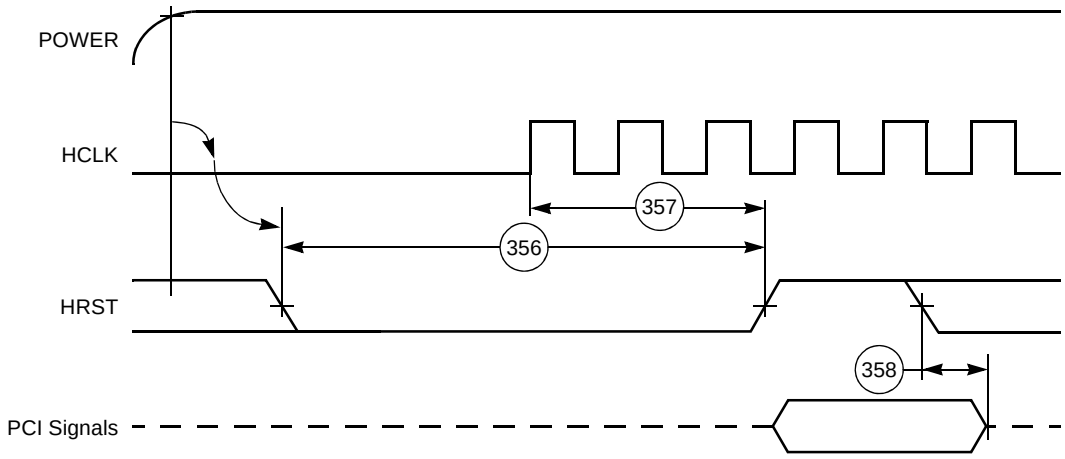

Figure 2-37. PCI Reset Timing

2.5.7 SCI Timing

Table 2-21. SCI Timing

No.	Characteristics[1]	Symbol	Expression	80 MHz		100 MHz		Unit
				Min	Max	Min	Max	
400	Synchronous clock cycle	t_{SCC}[2]	$8 \times T_C$	100.0	—	80.0	—	ns
401	Clock low period		$t_{SCC}/2 - 10.0$	40.0	—	30.0	—	ns
402	Clock high period		$t_{SCC}/2 - 10.0$	40.0	—	30.0	—	ns
403	Output data setup to clock falling edge (internal clock)		$t_{SCC}/4 + 0.5 \times T_C - 17.0$	14.3	—	8.0	—	ns
404	Output data hold after clock rising edge (internal clock)		$t_{SCC}/4 - 0.5 \times T_C$	18.8	—	15.0	—	ns
405	Input data setup time before clock rising edge (internal clock)		$t_{SCC}/4 + 0.5 \times T_C + 25.0$	56.3	—	50.0	—	ns
406	Input data not valid before clock rising edge (internal clock)		$t_{SCC}/4 + 0.5 \times T_C - 5.5$	—	25.8	—	19.5	ns
407	Clock falling edge to output data valid (external clock)			—	32.0	—	32.0	ns
408	Output data hold after clock rising edge (external clock)		$T_C + 8.0$	20.5	—	18.0	—	ns
409	Input data setup time before clock rising edge (external clock)			0.0	—	0.0	—	ns
410	Input data hold time after clock rising edge (external clock)			9.0	—	9.0	—	ns
411	Asynchronous clock cycle	t_{ACC}[3]	$64 \times T_C$	800.0	—	640.0	—	ns
412	Clock low period		$t_{ACC}/2 - 10.0$	390.0	—	310.0	—	ns
413	Clock high period		$t_{ACC}/2 - 10.0$	390.0	—	310.0	—	ns
414	Output data setup to clock rising edge (internal clock)		$t_{ACC}/2 - 30.0$	370.0	—	290.0	—	ns
415	Output data hold after clock rising edge (internal clock)		$t_{ACC}/2 - 30.0$	370.0	—	290.0	—	ns

Because of an order from the United States International Trade Commission, BGA-packaged product lines and part numbers indicated here currently are not available from Freescale for import or sale in the United States prior to September 2010: DSP56301

Downloaded from Elcodis.com electronic components distributor

Table 2-21. SCI Timing (Continued)

No.	Characteristics[1]	Symbol	Expression	80 MHz		100 MHz		Unit
				Min	Max	Min	Max	

Notes:
1. V_{CC} = 3.3 V ± 0.3 V; T_J = –40°C to +100 °C, C_L = 50 pF
2. t_{SCC} = synchronous clock cycle time (For internal clock, t_{SCC} is determined by the SCI clock control register and T_C.)
3. t_{ACC} = asynchronous clock cycle time; value given for 1X Clock mode (For internal clock, t_{ACC} is determined by the SCI clock control register and T_C.)

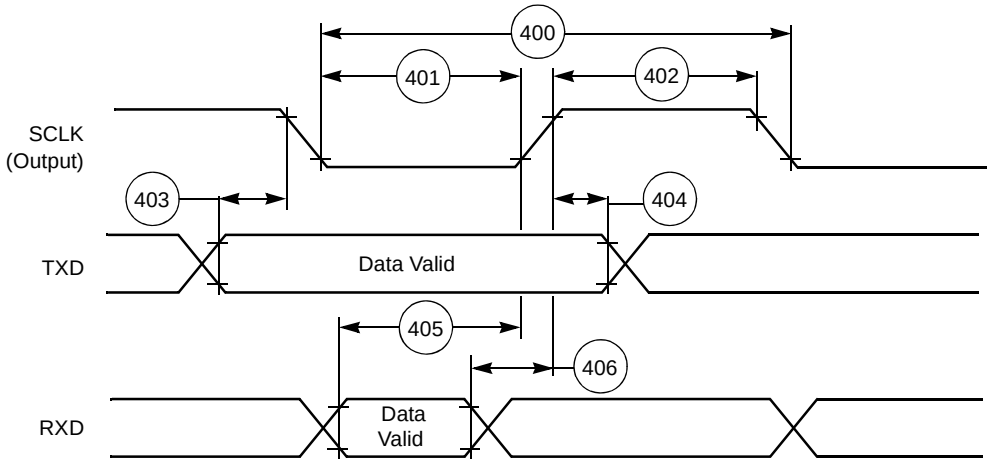

a) Internal Clock

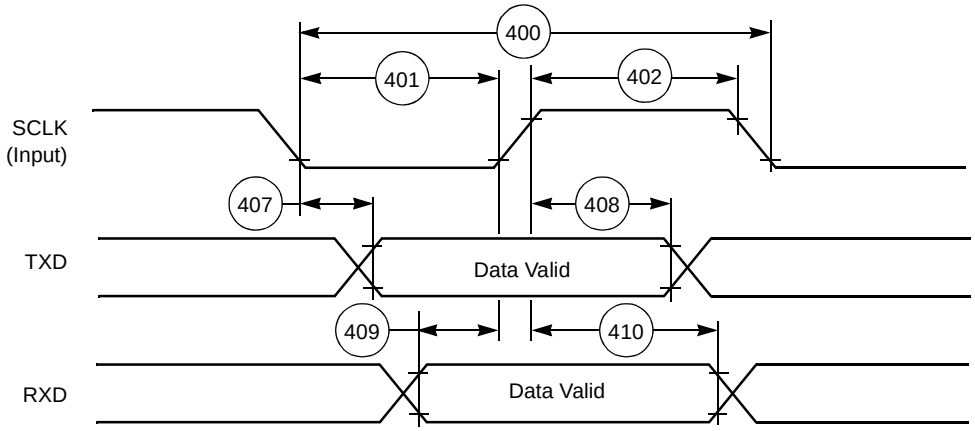

b) External Clock

Figure 2-38. SCI Synchronous Mode Timing

Because of an order from the United States International Trade Commission, BGA-packaged product lines and part numbers indicated here currently are not available from Freescale for import or sale in the United States prior to September 2010: DSP56301

Downloaded from Elcodis.com electronic components distributor

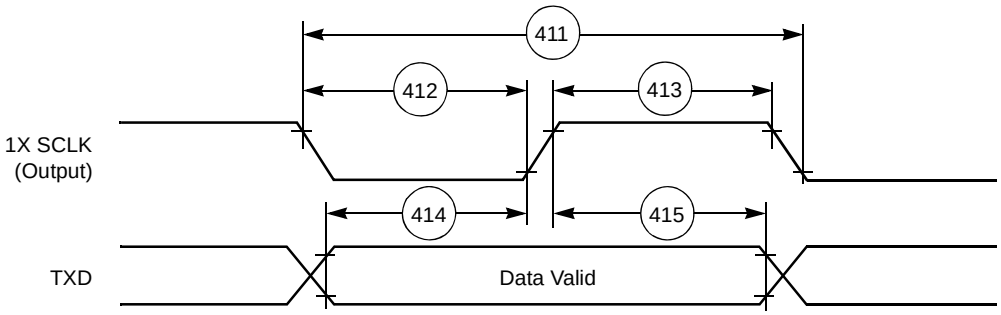

Figure 2-39. SCI Asynchronous Mode Timing

2.5.8 ESSI0/ESSI1 Timing

Table 2-22. ESSI Timings

No.	Characteristics[4, 5, 7]	Symbol	Expression	80 MHz		100 MHz		Cond-ition[6]	Unit
				Min	Max	Min	Max		
430	Clock cycle[1]	t_{SSICC}	$3 \times T_C$ $4 \times T_C$	50.0 37.5	— —	30.0 40.0	— —	x ck i ck	ns
431	Clock high period For internal clock For external clock		 $2 \times T_C - 10.0$ $1.5 \times T_C$	 15.0 18.8	 — —	 10.0 15.0	 — —		 ns ns
432	Clock low period For internal clock For external clock		 $2 \times T_C - 10.0$ $1.5 \times T_C$	 15.0 18.8	 — —	 10.0 15.0	 — —		 ns ns
433	RXC rising edge to FSR out (bl) high			— —	37.0 22.0	— —	37.0 22.0	x ck i ck a	ns
434	RXC rising edge to FSR out (bl) low			— —	37.0 22.0	— —	37.0 22.0	x ck i ck a	ns
435	RXC rising edge to FSR out (wr) high[2]			— —	39.0 24.0	— —	39.0 24.0	x ck i ck a	ns
436	RXC rising edge to FSR out (wr) low[2]			— —	39.0 24.0	— —	39.0 24.0	x ck i ck a	ns
437	RXC rising edge to FSR out (wl) high			— —	36.0 21.0	— —	36.0 21.0	x ck i ck a	ns
438	RXC rising edge to FSR out (wl) low			— —	37.0 22.0	— —	37.0 22.0	x ck i ck a	ns
439	Data in setup time before RXC (SCK in Synchronous mode) falling edge			10.0 19.0	— —	10.0 19.0	— —	x ck i ck	ns
440	Data in hold time after RXC falling edge			5.0 3.0	— —	5.0 3.0	— —	x ck i ck	ns
441	FSR input (bl, wr) high before RXC falling edge[2]			1.0 23.0	— —	1.0 23.0	— —	x ck i ck a	ns
442	FSR input (wl) high before RXC falling edge			3.5 23.0	— —	3.5 23.0	— —	x ck i ck a	ns
443	FSR input hold time after RXC falling edge			3.0 0.0	— —	3.0 0.0	— —	x ck i ck a	ns
444	Flags input setup before RXC falling edge			5.5 19.0	— —	5.5 19.0	— —	x ck i ck s	ns

Because of an order from the United States International Trade Commission, BGA-packaged product lines and part numbers indicated here currently are not available from Freescale for import or sale in the United States prior to September 2010: DSP56301

Downloaded from Elcodis.com electronic components distributor

Table 2-22. ESSI Timings (Continued)

No.	Characteristics[4, 5, 7]	Symbol	Expression	80 MHz		100 MHz		Cond-ition[6]	Unit
				Min	Max	Min	Max		
445	Flags input hold time after RXC falling edge			6.0 0.0	— —	6.0 0.0	— —	x ck i ck s	ns
446	TXC rising edge to FST out (bl) high			— —	29.0 15.0	— —	29.0 15.0	x ck i ck	ns
447	TXC rising edge to FST out (bl) low			— —	31.0 17.0	— —	31.0 17.0	x ck i ck	ns
448	TXC rising edge to FST out (wr) high[2]			— —	31.0 17.0	— —	31.0 17.0	x ck i ck	ns
449	TXC rising edge to FST out (wr) low[2]			— —	33.0 19.0	— —	33.0 19.0	x ck i ck	ns
450	TXC rising edge to FST out (wl) high			— —	30.0 16.0	— —	30.0 16.0	x ck i ck	ns
451	TXC rising edge to FST out (wl) low			— —	31.0 17.0	— —	31.0 17.0	x ck i ck	ns
452	TXC rising edge to data out enable from high impedance			— —	31.0 17.0	— —	31.0 17.0	x ck i ck	ns
453	TXC rising edge to Transmitter #0 drive enable assertion			— —	34.0 20.0	— —	34.0 20.0	x ck i ck	ns
454	TXC rising edge to data out valid[8]			— —	20.0 10.0	— —	20.0 10.0	x ck i ck	ns
455	TXC rising edge to data out high impedance[3]			— —	31.0 16.0	— —	31.0 16.0	x ck i ck	ns
456	TXC rising edge to Transmitter #0 drive enable deassertion[3]			— —	34.0 20.0	— —	34.0 20.0	x ck i ck	ns
457	FST input (bl, wr) setup time before TXC falling edge[2]			2.0 21.0	— —	2.0 21.0	— —	x ck i ck	ns
458	FST input (wl) to data out enable from high impedance			—	27.0	—	27.0	—	ns
459	FST input (wl) to Transmitter #0 drive enable assertion			—	31.0	—	31.0	—	ns
460	FST input (wl) setup time before TXC falling edge			2.5 21.0	— —	2.5 21.0	— —	x ck i ck	ns
461	FST input hold time after TXC falling edge			4.0 0.0	— —	4.0 0.0	— —	x ck i ck	ns
462	Flag output valid after TXC rising edge			— —	32.0 18.0	— —	32.0 18.0	x ck i ck	ns

Because of an order from the United States International Trade Commission, BGA-packaged product lines and part numbers indicated here currently are not available from Freescale for import or sale in the United States prior to September 2010: DSP56301

Downloaded from Elcodis.com electronic components distributor

Table 2-22. ESSI Timings (Continued)

No.	Characteristics[4, 5, 7]	Symbol	Expression	80 MHz		100 MHz		Cond-ition[6]	Unit
				Min	Max	Min	Max		

Notes:

1. For the internal clock, the external clock cycle is defined by the instruction cycle time (timing 7 in **Table 2-5** on page 2-6) and the ESSI control register.
2. The word-relative frame sync signal waveform relative to the clock operates the same way as the bit-length frame sync signal waveform, but spreads from one serial clock before the first bit clock (same as Bit Length Frame Sync signal), until the one before the last bit clock of the first word in frame.
3. Periodically sampled and not 100 percent tested
4. V_{CC} = 3.3 V ± 0.3 V; T_J = –40°C to +100 °C, C_L = 50 pF
5. TXC (SCK Pin) = Transmit Clock
   RXC (SC0 or SCK Pin) = Receive Clock
   FST (SC2 Pin) = Transmit Frame Sync
   FSR (SC1 or SC2 Pin) Receive Frame Sync
6. i ck = Internal Clock
   x ck = External Clock
   i ck a = Internal Clock, Asynchronous Mode
   (Asynchronous implies that TXC and RXC are two different clocks)
   i ck s = Internal Clock, Synchronous Mode
   (Synchronous implies that TXC and RXC are the same clock)
7. bl = bit length
   wl = word length
   wr = word length relative
8. If the DSP core writes to the transmit register during the last cycle before causing an underrun error, the delay is 20 ns + (0.5 × T_C).

Because of an order from the United States International Trade Commission, BGA-packaged product lines and part numbers indicated here currently are not available from Freescale for import or sale in the United States prior to September 2010: DSP56301

Downloaded from Elcodis.com electronic components distributor

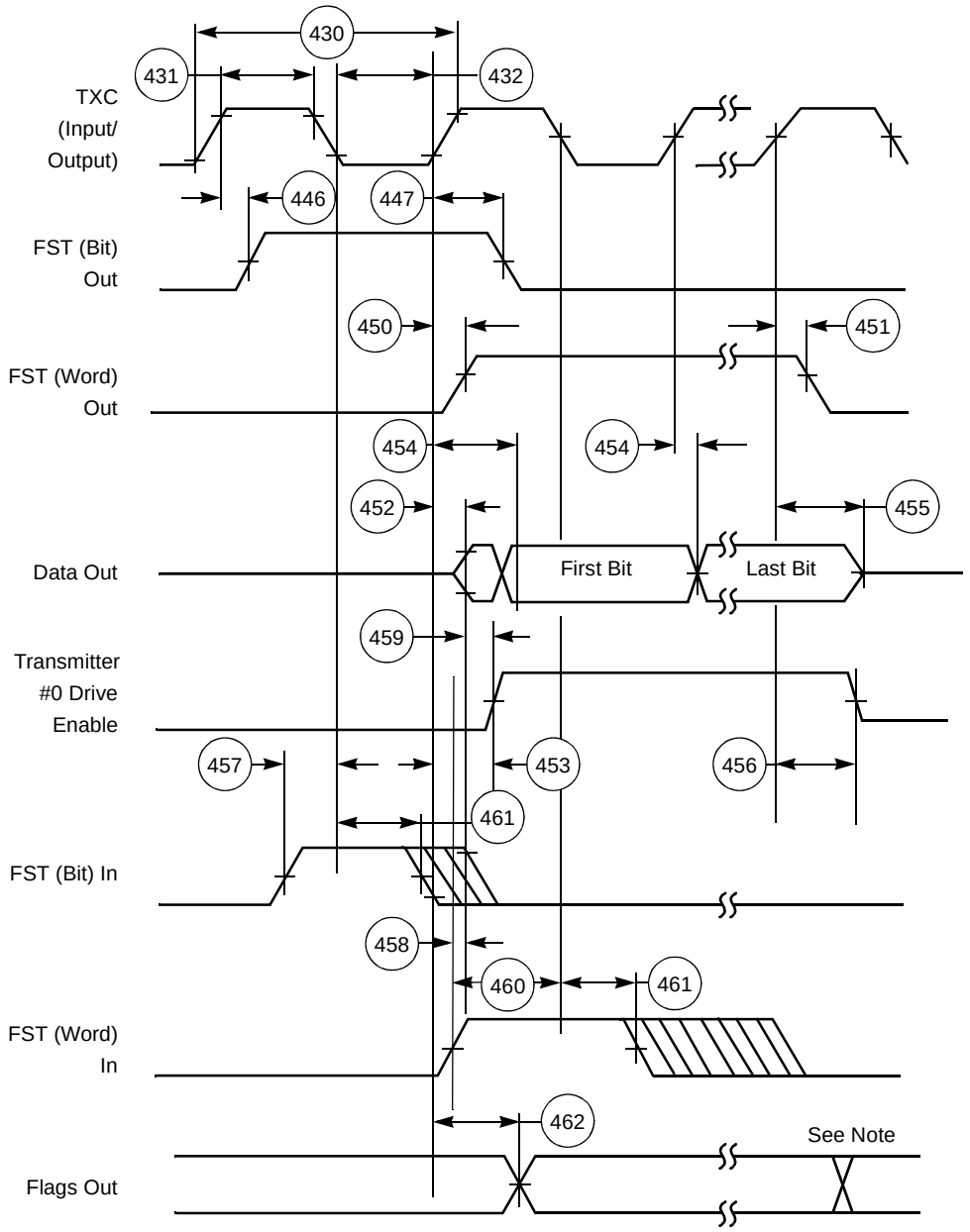

Note: In Network mode, output flag transitions can occur at the start of each time slot within the frame. In Normal mode, the output flag state is asserted for the entire frame period.

Figure 2-40. ESSI Transmitter Timing

Because of an order from the United States International Trade Commission, BGA-packaged product lines and part numbers indicated here currently are not available from Freescale for import or sale in the United States prior to September 2010: DSP56301

Downloaded from Elcodis.com electronic components distributor

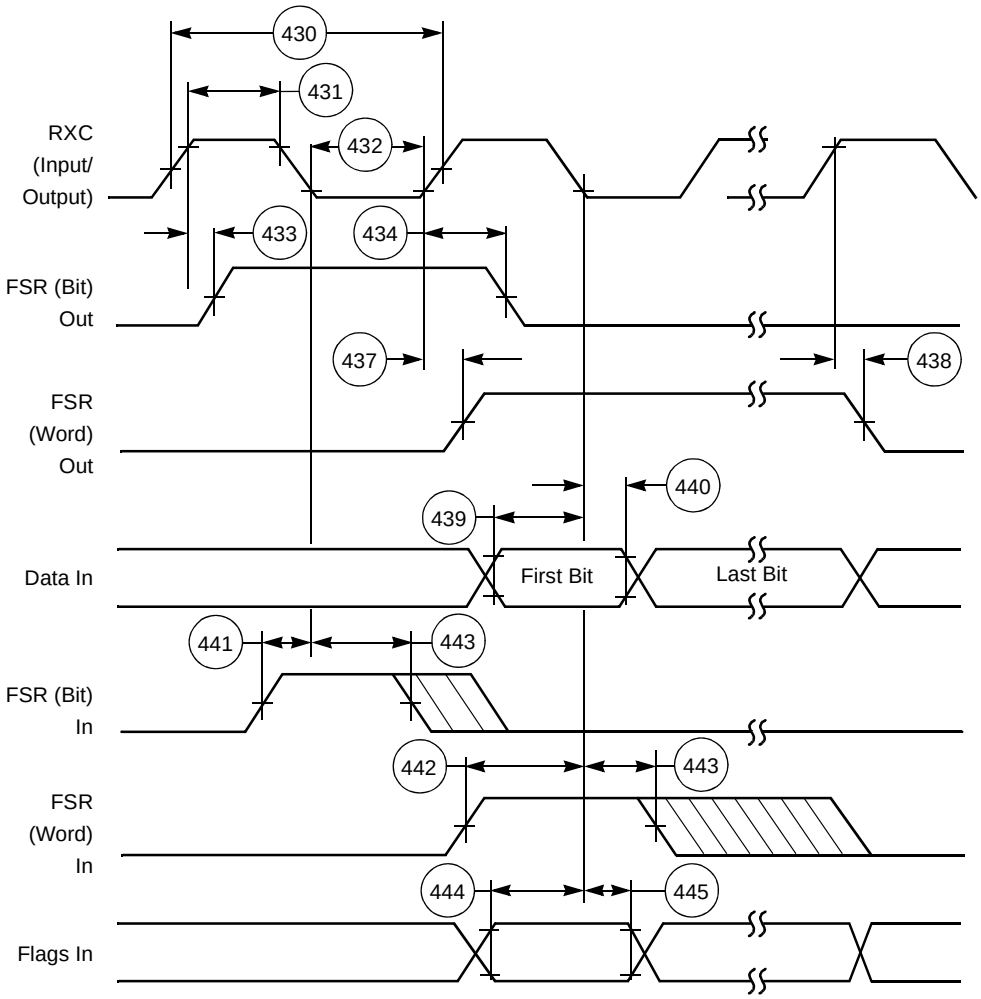

Figure 2-41. ESSI Receiver Timing

2.5.9 Timer Timing

Table 2-23. Timer Timing

No.	Characteristics	Expression	80 MHz		100 MHz		Unit
			Min	Max	Min	Max	
480	TIO Low	$2 \times T_C + 2.0$	27.0	—	22.0	—	ns
481	TIO High	$2 \times T_C + 2.0$	27.0	—	22.0	—	ns
482	Timer setup time from TIO (Input) assertion to CLKOUT rising edge		9.0	12.5	9.0	10.0	ns
483	Synchronous timer delay time from CLKOUT rising edge to the external memory access address out valid caused by first interrupt instruction execution	$10.25 \times T_C + 1.0$	129.1	—	103.5	—	ns
484	CLKOUT rising edge to TIO (Output) assertion • Minimum • Maximum	 $0.5 \times T_C + 0.5$ $0.5 \times T_C + 19.8$	 9.8 —	 — 26.1	 5.5 —	 — 24.8	 ns ns

Because of an order from the United States International Trade Commission, BGA-packaged product lines and part numbers indicated here currently are not available from Freescale for import or sale in the United States prior to September 2010: DSP56301

Downloaded from Elcodis.com electronic components distributor

Table 2-23. Timer Timing (Continued)

No.	Characteristics	Expression	80 MHz		100 MHz		Unit
			Min	Max	Min	Max	
485	CLKOUT rising edge to TIO (Output) deassertion • Minimum • Maximum	 $0.5 \times T_C + 0.5$ $0.5 \times T_C + 19.8$	 9.8 —	 — 26.1	 5.5 —	 — 24.8	 ns ns
Note:	$V_{CC} = 3.3\ V \pm 0.3\ V$; $T_J = -40°C$ to $+100\ °C$, $C_L = 50\ pF$						

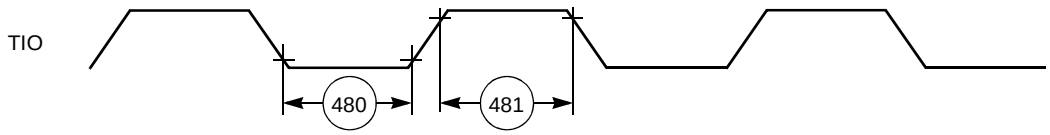

Figure 2-42. TIO Timer Event Input Restrictions

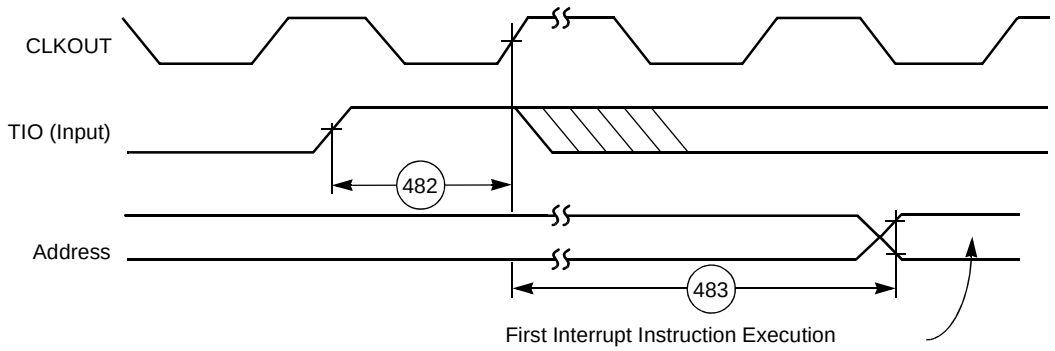

Figure 2-43. Timer Interrupt Generation

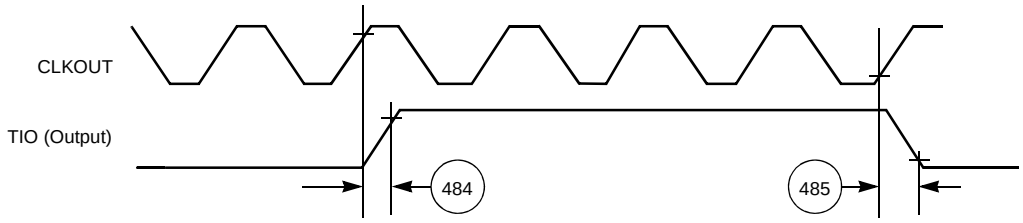

Figure 2-44. External Pulse Generation

2.5.10 GPIO Timing

Table 2-24. GPIO Timing

No.	Characteristics	Expression	80 MHz		100 MHz		Unit
			Min	Max	Min	Max	
490	CLKOUT edge to GPIO out valid (GPIO out delay time)		—	31.0	—	8.5	ns
491	CLKOUT edge to GPIO out not valid (GPIO out hold time)		0.0	—	0.0	—	ns
492	GPIO In valid to CLKOUT edge (GPIO in set-up time)		8.5	—	8.5	—	ns
493	CLKOUT edge to GPIO in not valid (GPIO in hold time)		0.0	—	0.0	—	ns
494	Fetch to CLKOUT edge before GPIO change	$6.75 \times T_C$	84.4	—	67.5	—	ns
Note:	$V_{CC} = 3.3\ V \pm 0.3\ V$; $T_J = -40°C$ to $+100\ °C$, $C_L = 50\ pF$						

Because of an order from the United States International Trade Commission, BGA-packaged product lines and part numbers indicated here currently are not available from Freescale for import or sale in the United States prior to September 2010: DSP56301

Downloaded from Elcodis.com electronic components distributor

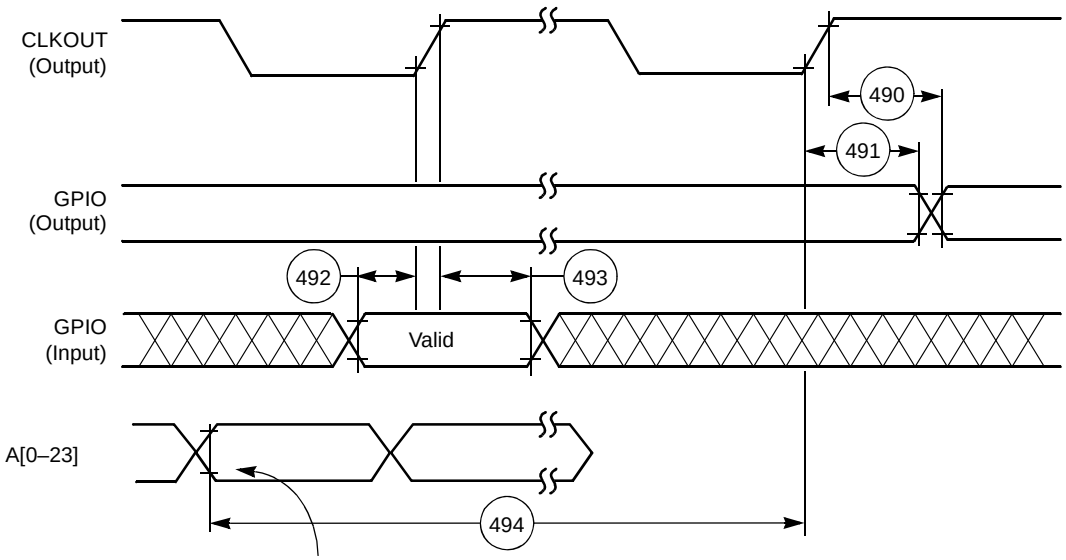

Fetch the instruction MOVE X0,X:(R0); X0 contains the new value of GPIO and R0 contains the address of GPIO data register.

Figure 2-45. GPIO Timing

2.5.11 JTAG Timing

Table 2-25. JTAG Timing

No.	Characteristics[1,2]	All frequencies		Unit
		Min	Max	
500	TCK frequency of operation (1/($T_C \times 3$); maximum 22 MHz)	0.0	22.0	MHz
501	TCK cycle time in Crystal mode	45.0	—	ns
502	TCK clock pulse width measured at 1.5 V	20.0	—	ns
503	TCK rise and fall times	0.0	3.0	ns
504	Boundary scan input data setup time	5.0	—	ns
505	Boundary scan input data hold time	24.0	—	ns
506	TCK low to output data valid	0.0	40.0	ns
507	TCK low to output high impedance	0.0	40.0	ns
508	TMS, TDI data setup time	5.0	—	ns
509	TMS, TDI data hold time	25.0	—	ns
510	TCK low to TDO data valid	0.0	44.0	ns
511	TCK low to TDO high impedance	0.0	44.0	ns
512	$\overline{\text{TRST}}$ assert time	100.0	—	ns
513	$\overline{\text{TRST}}$ setup time to TCK low	40.0	—	ns

Notes: **1.** V_{CC} = 3.3 V ± 0.3 V; T_J = –40°C to +100 °C, C_L = 50 pF
2. All timings apply to OnCE module data transfers because it uses the JTAG port as an interface.

Because of an order from the United States International Trade Commission, BGA-packaged product lines and part numbers indicated here currently are not available from Freescale for import or sale in the United States prior to September 2010: DSP56301

Downloaded from Elcodis.com electronic components distributor

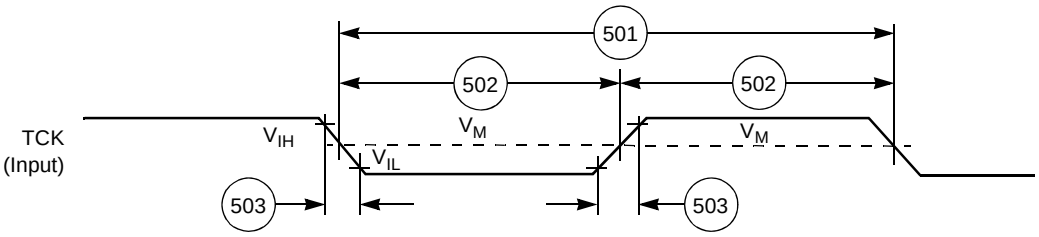

Figure 2-46. Test Clock Input Timing Diagram

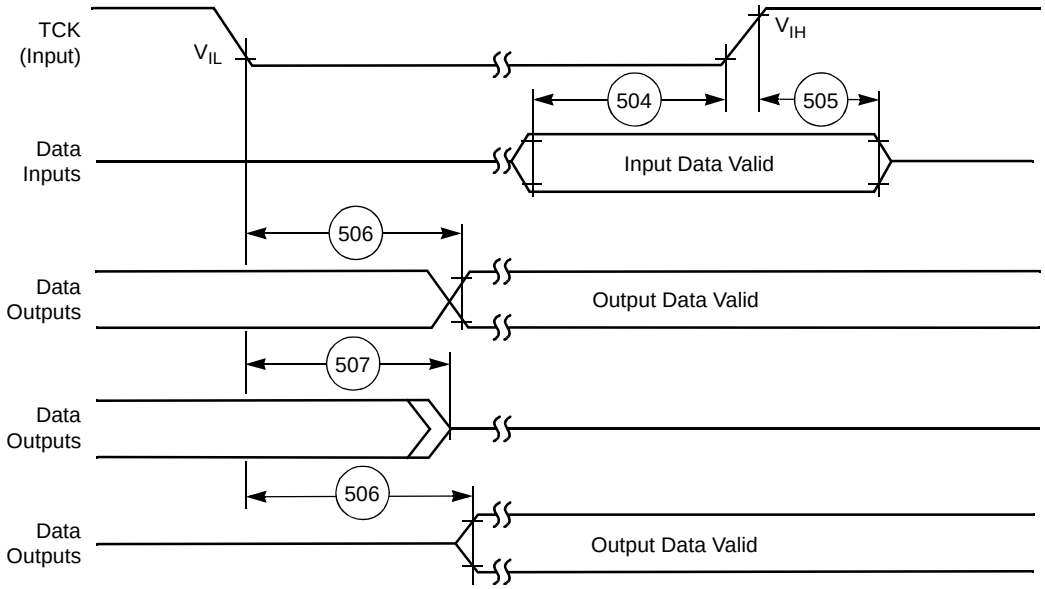

Figure 2-47. Boundary Scan (JTAG) Timing Diagram

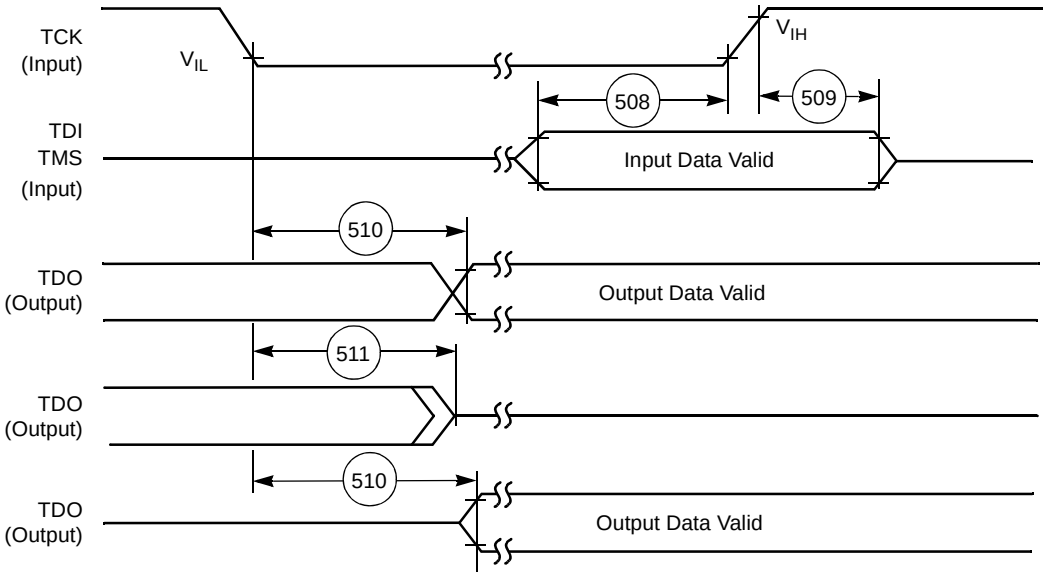

Figure 2-48. Test Access Port Timing Diagram

Because of an order from the United States International Trade Commission, BGA-packaged product lines and part numbers indicated here currently are not available from Freescale for import or sale in the United States prior to September 2010: DSP56301

Downloaded from Elcodis.com electronic components distributor

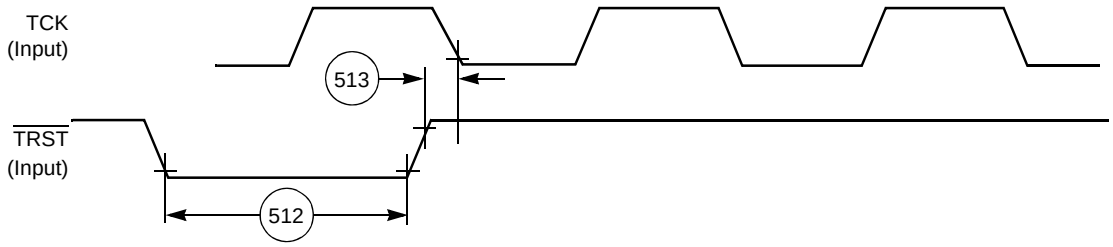

Figure 2-49. $\overline{\text{TRST}}$ Timing Diagram

2.5.12 OnCE Module TimIng

Table 2-26. OnCE Module Timing

No.	Characteristics	Expression	80 MHz		100 MHz		Unit
			Min	Max	Min	Max	
500	TCK frequency of operation	$1/(T_C \times 3)$, max: 22.0 MHz	0.0	22.0	0.0	22.0	MHz
514	$\overline{\text{DE}}$ assertion time in order to enter Debug mode	$1.5 \times T_C + 10.0$	28.8	—	25.0	—	ns
515	Response time when DSP56301 is executing NOP instructions from internal memory	$5.5 \times T_C + 30.0$	—	98.8	—	85.0	ns
516	Debug acknowledge assertion time	$3 \times T_C - 5.0$	47.5	—	25.0	—	ns
Note:	V_{CC} = 3.3 V ± 0.3 V; T_J = –40°C to +100 °C, C_L = 50 pF						

Figure 2-50. OnCE—Debug Request

Because of an order from the United States International Trade Commission, BGA-packaged product lines and part numbers indicated here currently are not available from Freescale for import or sale in the United States prior to September 2010: DSP56301

Downloaded from Elcodis.com electronic components distributor

Because of an order from the United States International Trade Commission, BGA-packaged product lines and part numbers indicated here currently are not available from Freescale for import or sale in the United States prior to September 2010: DSP56301

Downloaded from Elcodis.com electronic components distributor

Packaging 3

This section provides information on the available packages for the DSP56301, including diagrams of the package pinouts and tables showing how the signals discussed in **Section 1** are allocated for each package. The DSP56301 is available in two package types:

- 208-pin Thin Quad Flat Pack (TQFP)
- 252-pin Molded Array Process-Ball Grid Array (MAP-BGA)

Note: Both packages are available in lead-bearing and lead-free versions. Switching a design from a lead-bearing package device to a lead-free package device may require a change in the board manufacturing process. The lead-free package requires a higher solder flow temperature than the lead-bearing device. Refer to *Lead-Free BGA Solder Joint Assembly Evaluation* (EB635) for manufacturing considerations when incorporating lead-free package devices into a design.

Because of an order from the United States International Trade Commission, BGA-packaged product lines and part numbers indicated here currently are not available from Freescale for import or sale in the United States prior to September 2010: DSP56301

Downloaded from Elcodis.com electronic components distributor

3.1 TQFP Package Description

Top and bottom views of the TQFP package are shown in **Figure 3-1** and **Figure 3-2** with their pin-outs.

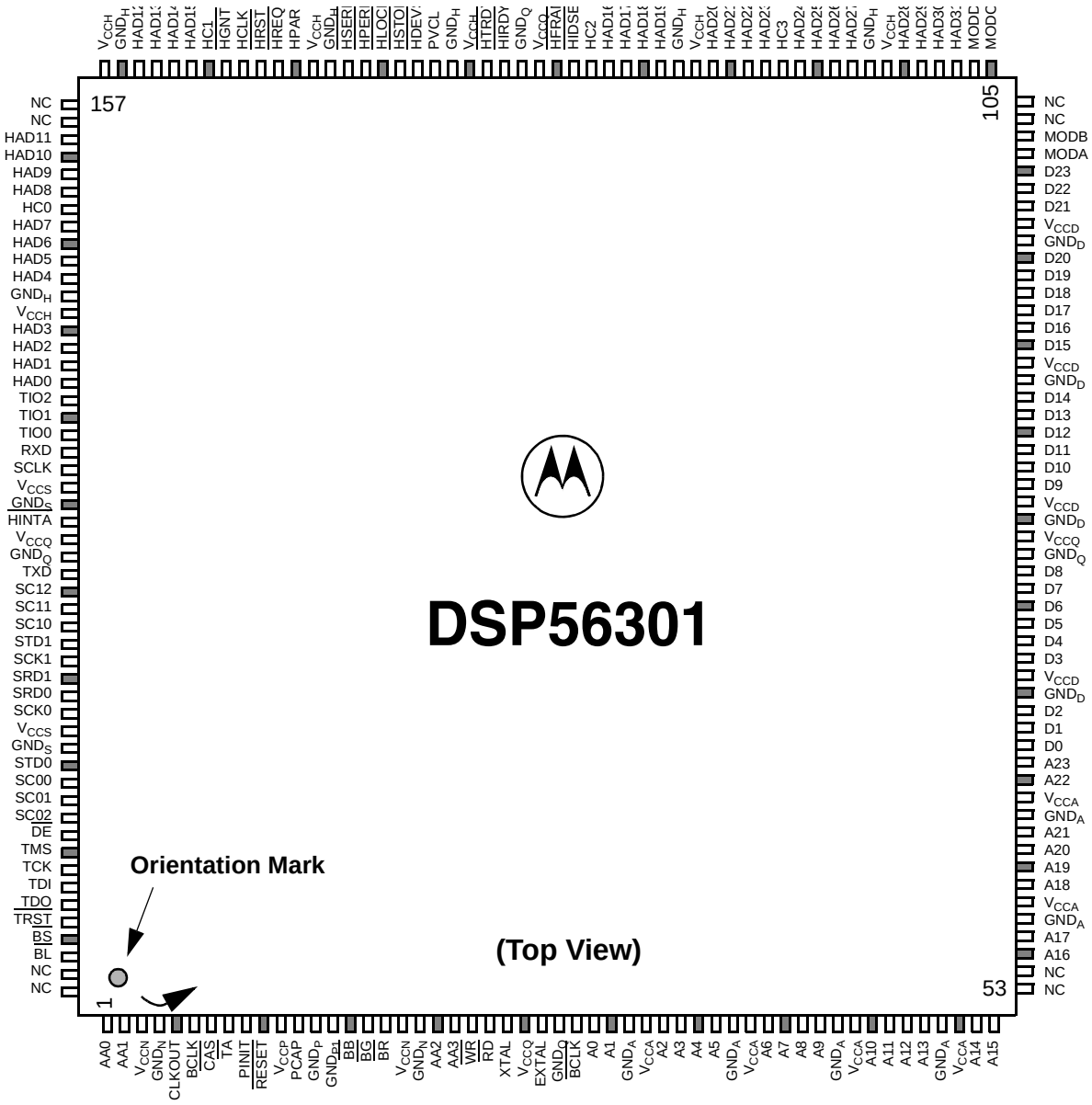

Figure 3-1. DSP56301 Thin Quad Flat Pack (TQFP), Top View

Because of an order from the United States International Trade Commission, BGA-packaged product lines and part numbers indicated here currently are not available from Freescale for import or sale in the United States prior to September 2010: DSP56301

Downloaded from Elcodis.com electronic components distributor

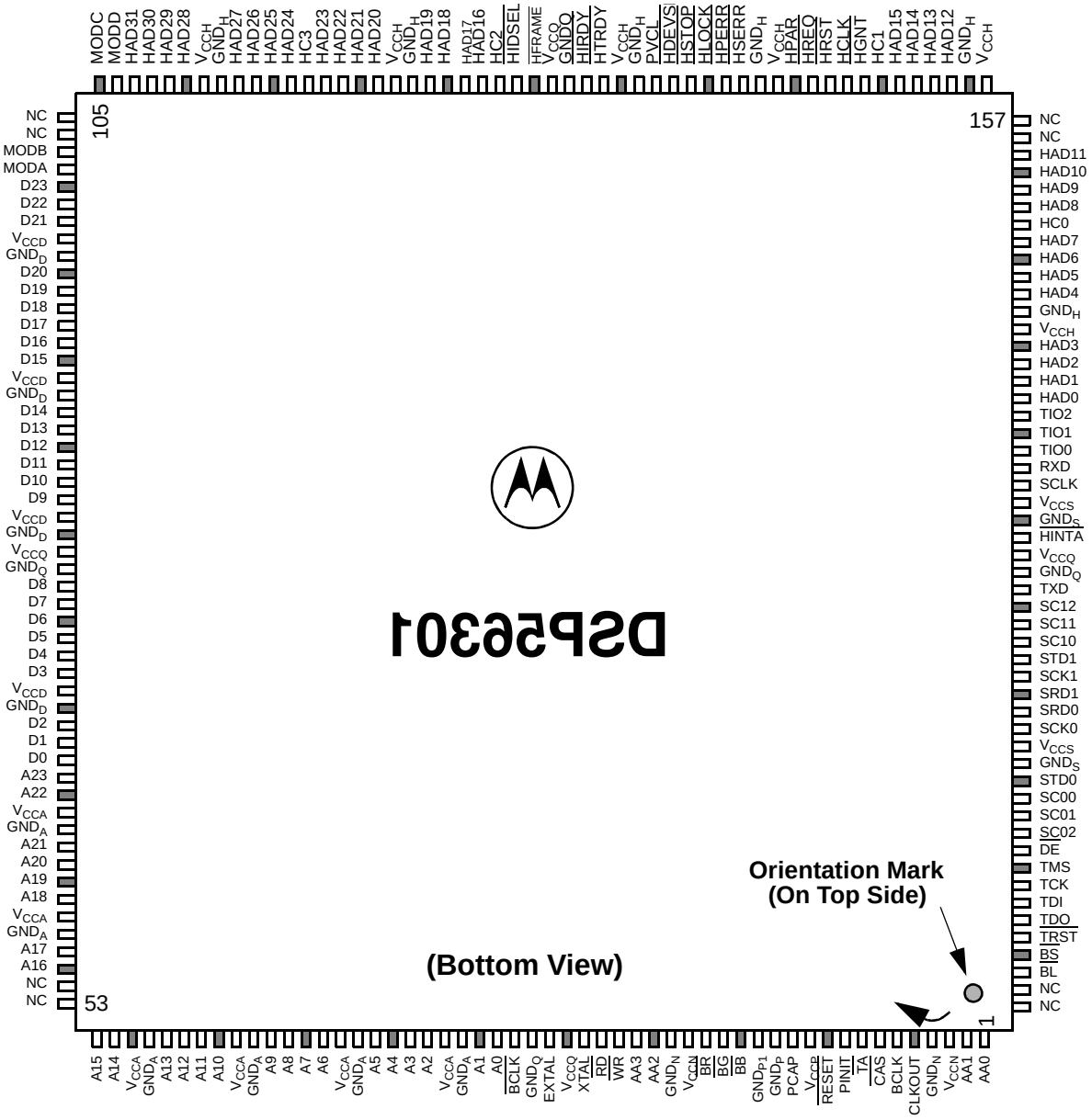

Figure 3-2. DSP56301 Thin Quad Flat Pack (TQFP), Bottom View

Because of an order from the United States International Trade Commission, BGA-packaged product lines and part numbers indicated here currently are not available from Freescale for import or sale in the United States prior to September 2010: DSP56301

Downloaded from Elcodis.com electronic components distributor

Table 3-1. DSP56301 TQFP Signal Identification by Pin Number

Pin No.	Signal Name	Pin No.	Signal Name	Pin No.	Signal Name
1	AA0/$\overline{\text{RAS0}}$	26	EXTAL	51	A14
2	AA1/$\overline{\text{RAS1}}$	27	GND_Q	52	A15
3	V_{CCN}	28	$\overline{\text{BCLK}}$	53	NC
4	GND_N	29	A0	54	NC
5	CLKOUT	30	A1	55	A16
6	BCLK	31	GND_A	56	A17
7	$\overline{\text{CAS}}$	32	V_{CCA}	57	GND_A
8	$\overline{\text{TA}}$	33	A2	58	V_{CCA}
9	PINIT/$\overline{\text{NMI}}$	34	A3	59	A18
10	$\overline{\text{RESET}}$	35	A4	60	A19
11	V_{CCP}	36	A5	61	A20
12	PCAP	37	GND_A	62	A21
13	GND_P	38	V_{CCA}	63	GND_A
14	GND_{P1}	39	A6	64	V_{CCA}
15	$\overline{\text{BB}}$	40	A7	65	A22
16	$\overline{\text{BG}}$	41	A8	66	A23
17	$\overline{\text{BR}}$	42	A9	67	D0
18	V_{CCN}	43	GND_A	68	D1
19	GND_N	44	V_{CCA}	69	D2
20	AA2/$\overline{\text{RAS2}}$	45	A10	70	GND_D
21	AA3/$\overline{\text{RAS3}}$	46	A11	71	V_{CCD}
22	$\overline{\text{WR}}$	47	A12	72	D3
23	$\overline{\text{RD}}$	48	A13	73	D4
24	XTAL	49	GND_A	74	D5
25	V_{CCQ}	50	V_{CCA}	75	D6

Because of an order from the United States International Trade Commission, BGA-packaged product lines and part numbers indicated here currently are not available from Freescale for import or sale in the United States prior to September 2010: DSP56301

Downloaded from Elcodis.com electronic components distributor

Table 3-1. DSP56301 TQFP Signal Identification by Pin Number (Continued)

Pin No.	Signal Name	Pin No.	Signal Name	Pin No.	Signal Name
76	D7	101	MODA/$\overline{\text{IRQA}}$	126	HAD17 or HD9
77	D8	102	MODB/$\overline{\text{IRQB}}$	127	HAD16 or HD8
78	GND_Q	103	NC	128	HC2/$\overline{\text{HBE2}}$, HA2, or PB18
79	V_{CCQ}	104	NC	129	$\overline{\text{HIDSEL}}$ or $\overline{\text{HRD}}$/$\overline{\text{HDS}}$
80	GND_D	105	MODC/$\overline{\text{IRQC}}$	130	$\overline{\text{HFRAME}}$
81	V_{CCD}	106	MODD/$\overline{\text{IRQD}}$	131	V_{CCQ}
82	D9	107	HAD31 or HD23	132	GND_Q
83	D10	108	HAD30 or HD22	133	$\overline{\text{HIRDY}}$, $\overline{\text{HDBDR}}$, or PB21
84	D11	109	HAD29 or HD21	134	$\overline{\text{HTRDY}}$, $\overline{\text{HDBEN}}$, or PB20
85	D12	110	HAD28 or HD20	135	V_{CCH}
86	D13	111	V_{CCH}	136	GND_H
87	D14	112	GND_H	137	PVCL
88	GND_D	113	HAD27 or HD19	138	$\overline{\text{HDEVSEL}}$, $\overline{\text{HSAK}}$, or PB22
89	V_{CCD}	114	HAD26 or HD18	139	$\overline{\text{HSTOP}}$ or $\overline{\text{HWR}}$/HRW
90	D15	115	HAD25 or HD17	140	$\overline{\text{HLOCK}}$, $\overline{\text{HBS}}$, or PB23
91	D16	116	HAD24 or HD16	141	$\overline{\text{HPERR}}$ or HDRQ
92	D17	117	HC3/$\overline{\text{HBE3}}$ or PB19	142	$\overline{\text{HSERR}}$ or $\overline{\text{HIRQ}}$
93	D18	118	HAD23 or HD15	143	GND_H
94	D19	119	HAD22 or HD14	144	V_{CCH}
95	D20	120	HAD21 or HD13	145	HPAR or $\overline{\text{HDAK}}$
96	GND_D	121	HAD20 or HD12	146	$\overline{\text{HREQ}}$ or $\overline{\text{HTA}}$
97	V_{CCD}	122	V_{CCH}	147	$\overline{\text{HRST}}$ or HRST
98	D21	123	GND_H	148	HCLK
99	D22	124	HAD19 or HD11	149	$\overline{\text{HGNT}}$ or HAEN
100	D23	125	HAD18 or HD10	150	HC1/$\overline{\text{HBE1}}$, HA1, or PB17

Because of an order from the United States International Trade Commission, BGA-packaged product lines and part numbers indicated here currently are not available from Freescale for import or sale in the United States prior to September 2010: DSP56301

Downloaded from Elcodis.com electronic components distributor

Table 3-1. DSP56301 TQFP Signal Identification by Pin Number (Continued)

Pin No.	Signal Name	Pin No.	Signal Name	Pin No.	Signal Name
151	HAD15, HD7, or PB15	171	HAD2, HA5, or PB2	191	SRD0 or PC4
152	HAD14, HD6, or PB14	172	HAD1, HA4, or PB1	192	SCK0 or PC3
153	HAD13, HD5, or PB13	173	HAD0, HA3, or PB0	193	V_{CCS}
154	HAD12, HD4, or PB12	174	TIO2	194	GND_S
155	GND_H	175	TIO1	195	STD0 or PC5
156	V_{CCH}	176	TIO0	196	SC00 or PC0
157	NC	177	RXD or PE0	197	SC01 or PC1
158	NC	178	SCLK or PE2	198	SC02 or PC2
159	HAD11, HD3, or PB11	179	V_{CCS}	199	$\overline{DE}$
160	HAD10, HD2, or PB10	180	GND_S	200	TMS
161	HAD9, HD1, or PB9	181	$\overline{HINTA}$	201	TCK
162	HAD8, HD0, or PB8	182	V_{CCQ}	202	TDI
163	HC0/$\overline{HBE0}$, HA0, or PB16	183	GND_Q	203	TDO
164	HAD7, HA10, or PB7	184	TXD or PE1	204	$\overline{TRST}$
165	HAD6, HA9, or PB6	185	SC12 or PD2	205	$\overline{BS}$
166	HAD5, HA8, or PB5	186	SC11 or PD1	206	$\overline{BL}$
167	HAD4, HA7, or PB4	187	SC10 or PD0	207	NC
168	GND_H	188	STD1 or PD5	208	NC
169	V_{CCH}	189	SCK1 or PD3		
170	HAD3, HA6, or PB3	190	SRD1 or PD4		

Notes:
1. Signal names are based on configured functionality. Most pins supply a single signal. Some pins provide a signal with dual functionality, such as the MODx/$\overline{IRQx}$ pins that select an operating mode after $\overline{RESET}$ is deasserted, but act as interrupt lines during operation. Some pins have two or more configurable functions; names assigned to these pins indicate the function for a specific configuration. For example, Pin 165 is address/data line HAD6 in PCI bus mode, address line HA9 in non-PCI bus mode, or GPIO line PB6 when the GPIO function is enabled for this pin.
2. NC stands for Not Connected. These pins are reserved for future development. Do not connect any line, component, trace, or via to these pins.

Because of an order from the United States International Trade Commission, BGA-packaged product lines and part numbers indicated here currently are not available from Freescale for import or sale in the United States prior to September 2010: DSP56301

Downloaded from Elcodis.com electronic components distributor

Table 3-2. DSP56301 TQFP Signal Identification by Name

Signal Name	Pin No.	Signal Name	Pin No.	Signal Name	Pin No.
A0	29	AA3	21	D3	72
A1	30	$\overline{BB}$	15	D4	73
A10	45	BCLK	6	D5	74
A11	46	$\overline{BCLK}$	28	D6	75
A12	47	$\overline{BG}$	16	D7	76
A13	48	$\overline{BL}$	206	D8	77
A14	51	$\overline{BR}$	17	D9	82
A15	52	$\overline{BS}$	205	$\overline{DE}$	199
A16	55	$\overline{CAS}$	7	EXTAL	26
A17	56	CLKOUT	5	GND_{P1}	14
A18	59	D0	67	GND_A	31
A19	60	D1	68	GND_A	37
A2	33	D10	83	GND_A	43
A20	61	D11	84	GND_A	49
A21	62	D12	85	GND_A	57
A22	65	D13	86	GND_A	63
A23	66	D14	87	GND_D	70
A3	34	D15	90	GND_D	80
A4	35	D16	91	GND_D	88
A5	36	D17	92	GND_D	96
A6	39	D18	93	GND_H	112
A7	40	D19	94	GND_H	123
A8	41	D2	69	GND_H	136
A9	42	D20	95	GND_H	143
AA0	1	D21	98	GND_H	155
AA1	2	D22	99	GND_H	168
AA2	20	D23	100	GND_N	4

Because of an order from the United States International Trade Commission, BGA-packaged product lines and part numbers indicated here currently are not available from Freescale for import or sale in the United States prior to September 2010: DSP56301

Downloaded from Elcodis.com electronic components distributor

Table 3-2. DSP56301 TQFP Signal Identification by Name (Continued)

Signal Name	Pin No.	Signal Name	Pin No.	Signal Name	Pin No.
GND_N	19	HAD14	152	HAEN	149
GND_P	13	HAD15	151	$\overline{HBE0}$	163
GND_Q	27	HAD16	127	$\overline{HBE1}$	150
GND_Q	78	HAD17	126	$\overline{HBE2}$	128
GND_Q	132	HAD18	125	$\overline{HBE3}$	117
GND_Q	183	HAD19	124	$\overline{HBS}$	140
GND_Q	183	HAD2	171	HC0	163
GND_S	180	HAD20	121	HC1	150
GND_S	194	HAD21	120	HC2	128
HA0	163	HAD22	119	HC3	117
HA1	150	HAD23	118	HCLK	148
HA10	164	HAD24	116	HD0	162
HA2	128	HAD25	115	HD1	161
HA3	173	HAD26	114	HD10	125
HA4	172	HAD27	113	HD11	124
HA5	171	HAD28	110	HD12	121
HA6	170	HAD29	109	HD13	120
HA7	167	HAD3	170	HD14	119
HA8	166	HAD30	108	HD15	118
HA9	165	HAD31	107	HD16	116
HAD0	173	HAD4	167	HD17	115
HAD1	172	HAD5	166	HD18	114
HAD10	160	HAD6	165	HD19	113
HAD11	159	HAD7	164	HD2	160
HAD12	154	HAD8	162	HD20	110
HAD13	153	HAD9	161	HD21	109

Because of an order from the United States International Trade Commission, BGA-packaged product lines and part numbers indicated here currently are not available from Freescale for import or sale in the United States prior to September 2010: DSP56301

Downloaded from Elcodis.com electronic components distributor

Table 3-2. DSP56301 TQFP Signal Identification by Name (Continued)

Signal Name	Pin No.	Signal Name	Pin No.	Signal Name	Pin No.
HD22	108	$\overline{\text{HRST}}$/HRST	147	PB0	173
HD23	107	HRW	139	PB1	172
HD3	159	$\overline{\text{HSAK}}$	138	PB10	160
HD4	154	$\overline{\text{HSERR}}$	142	PB11	159
HD5	153	$\overline{\text{HSTOP}}$	139	PB12	154
HD6	152	$\overline{\text{HTA}}$	146	PB13	153
HD7	151	$\overline{\text{HTRDY}}$	134	PB14	152
HD8	127	$\overline{\text{HWR}}$	139	PB15	151
HD9	126	$\overline{\text{IRQA}}$	101	PB16	163
$\overline{\text{HDAK}}$	145	$\overline{\text{IRQB}}$	102	PB17	150
$\overline{\text{HDBDR}}$	133	$\overline{\text{IRQC}}$	105	PB18	128
$\overline{\text{HDBEN}}$	134	$\overline{\text{IRQD}}$	106	PB19	117
$\overline{\text{HDEVSEL}}$	138	MODA	101	PB2	171
HDRQ	141	MODB	102	PB20	134
$\overline{\text{HDS}}$	129	MODC	105	PB21	133
$\overline{\text{HFRAME}}$	130	MODD	106	PB22	138
$\overline{\text{HGNT}}$	149	NC	28	PB23	140
HIDSEL	129	NC	53	PB3	170
$\overline{\text{HINTA}}$	181	NC	54	PB4	167
$\overline{\text{HIRDY}}$	133	NC	103	PB5	166
$\overline{\text{HIRQ}}$	142	NC	104	PB6	165
$\overline{\text{HLOCK}}$	140	NC	157	PB7	164
HPAR	145	NC	158	PB8	162
$\overline{\text{HPERR}}$	141	NC	207	PB9	161
$\overline{\text{HRD}}$	129	NC	208	PC0	196
$\overline{\text{HREQ}}$	146	$\overline{\text{NMI}}$	9	PC1	197

Because of an order from the United States International Trade Commission, BGA-packaged product lines and part numbers indicated here currently are not available from Freescale for import or sale in the United States prior to September 2010: DSP56301

Downloaded from Elcodis.com electronic components distributor

Table 3-2. DSP56301 TQFP Signal Identification by Name (Continued)

Signal Name	Pin No.	Signal Name	Pin No.	Signal Name	Pin No.
PC2	198	SC02	198	V_{CCA}	58
PC3	192	SC10	187	V_{CCA}	64
PC4	191	SC11	186	V_{CCD}	71
PC5	195	SC12	185	V_{CCD}	81
PCAP	12	SCK0	192	V_{CCD}	89
PD0	187	SCK1	189	V_{CCD}	97
PD1	186	SCLK	178	V_{CCH}	111
PD2	185	SRD0	191	V_{CCH}	122
PD3	189	SRD1	190	V_{CCH}	135
PD4	190	STD0	195	V_{CCH}	144
PD5	188	STD1	188	V_{CCH}	156
PE0	177	$\overline{TA}$	8	V_{CCH}	169
PE1	184	TCK	201	V_{CCN}	3
PE2	178	TDI	202	V_{CCN}	18
PINIT	9	TDO	203	V_{CCP}	11
PVCL	137	TIO0	176	V_{CCQ}	25
$\overline{RAS0}$	1	TIO1	175	V_{CCQ}	79
$\overline{RAS1}$	2	TIO2	174	V_{CCQ}	131
$\overline{RAS2}$	20	TMS	200	V_{CCQ}	182
$\overline{RAS3}$	21	$\overline{TRST}$	204	V_{CCS}	179
$\overline{RD}$	23	TXD	184	V_{CCS}	193
$\overline{RESET}$	10	V_{CCA}	32	$\overline{WR}$	22
RXD	177	V_{CCA}	38	XTAL	24
SC00	196	V_{CCA}	44		
SC01	197	V_{CCA}	50		

Note: NC stands for Not Connected. These pins are reserved for future development. Do not connect any line, component, or trace to these pins.

Because of an order from the United States International Trade Commission, BGA-packaged product lines and part numbers indicated here currently are not available from Freescale for import or sale in the United States prior to September 2010: DSP56301

Downloaded from Elcodis.com electronic components distributor

3.2 TQFP Package Mechanical Drawing

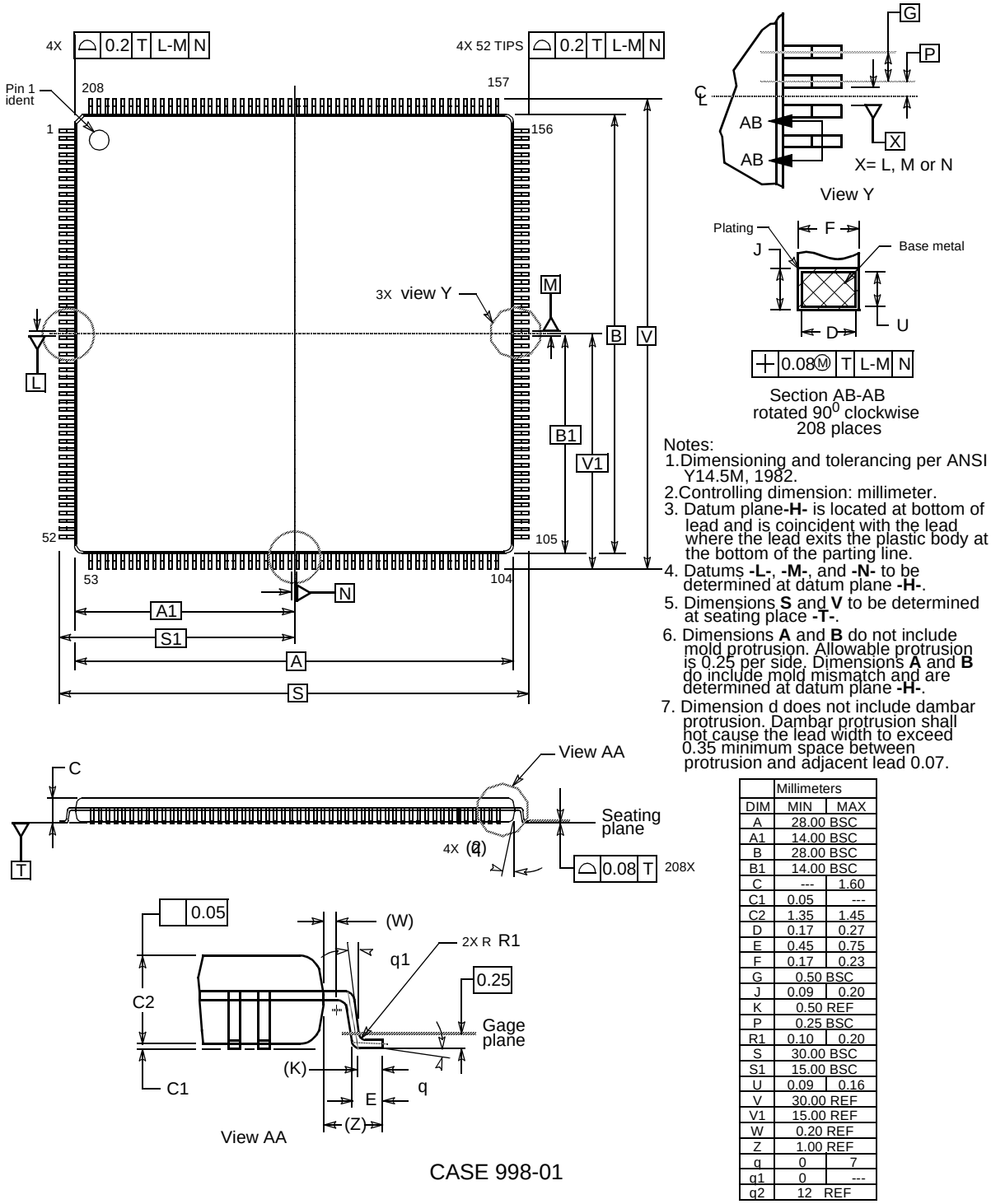

Notes:
1. Dimensioning and tolerancing per ANSI Y14.5M, 1982.
2. Controlling dimension: millimeter.
3. Datum plane **-H-** is located at bottom of lead and is coincident with the lead where the lead exits the plastic body at the bottom of the parting line.
4. Datums **-L-**, **-M-**, and **-N-** to be determined at datum plane **-H-**.
5. Dimensions **S** and **V** to be determined at seating place **-T-**.
6. Dimensions **A** and **B** do not include mold protrusion. Allowable protrusion is 0.25 per side. Dimensions **A** and **B** do include mold mismatch and are determined at datum plane **-H-**.
7. Dimension d does not include dambar protrusion. Dambar protrusion shall not cause the lead width to exceed 0.35 minimum space between protrusion and adjacent lead 0.07.

	Millimeters	
DIM	MIN	MAX
A	28.00 BSC	
A1	14.00 BSC	
B	28.00 BSC	
B1	14.00 BSC	
C	---	1.60
C1	0.05	---
C2	1.35	1.45
D	0.17	0.27
E	0.45	0.75
F	0.17	0.23
G	0.50 BSC	
J	0.09	0.20
K	0.50 REF	
P	0.25 BSC	
R1	0.10	0.20
S	30.00 BSC	
S1	15.00 BSC	
U	0.09	0.16
V	30.00 REF	
V1	15.00 REF	
W	0.20 REF	
Z	1.00 REF	
q	0	7
q1	0	---
q2	12 REF	

Figure 3-3. DSP56301 Mechanical Information, 208-pin TQFP Package

Because of an order from the United States International Trade Commission, BGA-packaged product lines and part numbers indicated here currently are not available from Freescale for import or sale in the United States prior to September 2010: DSP56301

Downloaded from Elcodis.com electronic components distributor

3.3 MAP-BGA Package Description

Top and bottom views of the MAP-BGA package are shown in **Figure 3-4** and **Figure 3-5** with their pin-outs.

Top View

	1	2	3	4	5	6	7	8	9	10	11	12	13	14	15	16
A		NC	HAD15	HCLK	HPAR	$\overline{\text{HPERR}}$	$\overline{\text{HIRDY}}$	HAD16	HAD17	HAD20	HAD23	HAD24	HAD27	HAD30	NC	
B	NC	NC	HAD14	$\overline{\text{HGNT}}$	$\overline{\text{HRST}}$	$\overline{\text{HSERR}}$	$\overline{\text{HDEV}}$ / $\overline{\text{SEL}}$	HIDSEL	HC2	HAD19	HAD22	HAD25	HAD29	HAD31	NC	NC
C	HAD8	HAD11	HAD12	HAD13	HC1	$\overline{\text{HREQ}}$	$\overline{\text{HLOCK}}$	$\overline{\text{H}}$ / $\overline{\text{FRAME}}$	HAD18	HAD21	HC3	HAD26	MODD	NC	NC	NC
D	HAD5	HAD7	HAD9	HAD10	V_{CC}	PVCL	$\overline{\text{HSTOP}}$	$\overline{\text{HTRDY}}$	V_{CC}	V_{CC}	V_{CC}	HAD28	MODC	NC	MODB	D23
E	HAD2	HAD4	HAD6	HC0	V_{CC}	V_{CC}	V_{CC}	V_{CC}	V_{CC}	V_{CC}	V_{CC}	V_{CC}	V_{CC}	MODA	D22	D21
F	HAD1	HAD0	HAD3	V_{CC}	V_{CC}	GND	GND	GND	GND	GND	GND	V_{CC}	D18	D19	D20	D17
G	TI01	RXD	TI02	V_{CC}	V_{CC}	GND	GND	GND	GND	GND	GND	V_{CC}	D12	D15	D16	D14
H	SCLK	$\overline{\text{HINTA}}$	TI00	V_{CC}	V_{CC}	GND	GND	GND	GND	GND	GND	V_{CC}	D11	D9	D13	D8
J	SC11	SC12	TXD	SC10	V_{CC}	GND	GND	GND	GND	GND	GND	V_{CC}	V_{CC}	D5	D10	D7
K	STD1	SCK1	SCK0	SRD0	V_{CC}	GND	GND	GND	GND	GND	GND	V_{CC}	V_{CC}	D3	D6	D4
L	SRD1	STD0	SC02	SC01	V_{CC}	GND	GND	GND	GND	GND	GND	V_{CC}	V_{CC}	D0	D2	D1
M	SC00	$\overline{\text{DE}}$	TDO	TMS	V_{CC}	V_{CC}	V_{CC}	V_{CC}	V_{CC}	V_{CC}	V_{CC}	V_{CC}	A19	A21	A22	A23
N	TCK	TDI	NC	$\overline{\text{BL}}$	$\overline{\text{TA}}$	V_{CC}	V_{CC}	V_{CC}	A1	A2	V_{CC}	V_{CC}	A16	A17	A20	NC
P	$\overline{\text{TRST}}$	$\overline{\text{BS}}$	AA0	CLK OUT	PINIT	GND_P	$\overline{\text{BG}}$	AA3	EXTAL	A5	A8	A12	NC	A15	NC	A18
R	NC	NC	AA1	$\overline{\text{CAS}}$	V_{CCP}	$\overline{\text{BB}}$	AA2	XTAL	$\overline{\text{BCLK}}$	A3	A6	A9	A11	A14	NC	NC
T		NC	BCLK	$\overline{\text{RESET}}$	PCAP	GND_{P1}	$\overline{\text{BR}}$	$\overline{\text{WR}}$	$\overline{\text{RD}}$	A0	A4	A7	A10	A13	NC	

Figure 3-4. DSP56301 Molded Array Process-Ball Grid Array (MAP-BGA), Top View

DSP56301

Because of an order from the United States International Trade Commission, BGA-packaged product lines and part numbers indicated here currently are not available from Freescale for import or sale in the United States prior to September 2010: DSP56301

Downloaded from Elcodis.com electronic components distributor

Bottom View

16	15	14	13	12	11	10	9	8	7	6	5	4	3	2	1	
	NC	HAD30	HAD27	HAD24	HAD23	HAD20	HAD17	HAD16	$\overline{\text{HIRDY}}$	$\overline{\text{HPERR}}$	HPAR	HCLK	HAD15	NC		A
NC	NC	HAD31	HAD29	HAD25	HAD22	HAD19	HC2	HIDSEL	HDEV / $\overline{\text{SEL}}$	$\overline{\text{HSERR}}$	$\overline{\text{HRST}}$	$\overline{\text{HGNT}}$	HAD14	NC	NC	B
NC	NC	NC	MODD	HAD26	HC3	HAD21	HAD18	$\overline{\text{H}}$ / $\overline{\text{FRAME}}$	$\overline{\text{HLOCK}}$	$\overline{\text{HREQ}}$	HC1	HAD13	HAD12	HAD11	HAD8	C
D23	MODB	NC	MODC	HAD28	V_{CC}	V_{CC}	V_{CC}	$\overline{\text{HTRDY}}$	$\overline{\text{HSTOP}}$	PVCL	V_{CC}	HAD10	HAD9	HAD7	HAD5	D
D21	D22	MODA	V_{CC}	V_{CC}	V_{CC}	V_{CC}	V_{CC}	V_{CC}	V_{CC}	V_{CC}	V_{CC}	HC0	HAD6	HAD4	HAD2	E
D17	D20	D19	D18	V_{CC}	GND	GND	GND	GND	GND	GND	V_{CC}	V_{CC}	HAD3	HAD0	HAD1	F
D14	D16	D15	D12	V_{CC}	GND	GND	GND	GND	GND	GND	V_{CC}	V_{CC}	TI02	RXD	TI01	G
D8	D13	D9	D11	V_{CC}	GND	GND	GND	GND	GND	GND	V_{CC}	V_{CC}	TI00	$\overline{\text{HINTA}}$	SCLK	H
D7	D10	D5	V_{CC}	V_{CC}	GND	GND	GND	GND	GND	GND	V_{CC}	SC10	TXD	SC12	SC11	J
D4	D6	D3	V_{CC}	V_{CC}	GND	GND	GND	GND	GND	GND	V_{CC}	SRD0	SCK0	SCK1	STD1	K
D1	D2	D0	V_{CC}	V_{CC}	GND	GND	GND	GND	GND	GND	V_{CC}	SC01	SC02	STD0	SRD1	L
A23	A22	A21	A19	V_{CC}	V_{CC}	V_{CC}	V_{CC}	V_{CC}	V_{CC}	V_{CC}	V_{CC}	TMS	TDO	$\overline{\text{DE}}$	SC00	M
NC	A20	A17	A16	V_{CC}	V_{CC}	A2	A1	V_{CC}	V_{CC}	V_{CC}	$\overline{\text{TA}}$	$\overline{\text{BL}}$	NC	TDI	TCK	N
A18	NC	A15	NC	A12	A8	A5	EXTAL	AA3	$\overline{\text{BG}}$	GND_P	PINIT	CLK OUT	AA0	$\overline{\text{BS}}$	$\overline{\text{TRST}}$	P
NC	NC	A14	A11	A9	A6	A3	$\overline{\text{BLCK}}$	XTAL	AA2	$\overline{\text{BB}}$	V_{CCP}	$\overline{\text{CAS}}$	AA1	NC	NC	R
	NC	A13	A10	A7	A4	A0	$\overline{\text{RD}}$	$\overline{\text{WR}}$	$\overline{\text{BR}}$	GND_{P1}	PCAP	$\overline{\text{RESET}}$	BCLK	NC		T

Figure 3-5. DSP56301 Molded Array Process-Ball Grid Array (MAP-BGA), Bottom View

Because of an order from the United States International Trade Commission, BGA-packaged product lines and part numbers indicated here currently are not available from Freescale for import or sale in the United States prior to September 2010: DSP56301

Downloaded from Elcodis.com electronic components distributor

Table 3-3. DSP56301 MAP-BGA Signal Identification by Pin Number

Pin No.	Signal Name	Pin No.	Signal Name	Pin No.	Signal Name
A2	NC	B12	HAD25 or HD17	D5	V_{CC}
A3	HAD15, HD7, or PB15	B13	HAD29 or HD21	D6	PVCL
A4	HCLK	B14	HAD31 or HD23	D7	$\overline{\text{HSTOP}}$ or $\overline{\text{HWR}}$/HRW
A5	HPAR or $\overline{\text{HDAK}}$	B15	NC	D8	$\overline{\text{HTRDY}}$, $\overline{\text{HDBEN}}$, or PB20
A6	$\overline{\text{HPERR}}$ or HDRQ	B16	NC	D9	V_{CC}
A7	$\overline{\text{HIRDY}}$, $\overline{\text{HDBDR}}$, or PB21	C1	HAD8, HD0, or PB8	D10	V_{CC}
A8	HAD16 or HD8	C2	HAD11, HD3, or PB11	D11	V_{CC}
A9	HAD17 or HD9	C3	HAD12, HD4, or PB12	D12	HAD28 or HD20
A10	HAD20 or HD12	C4	HAD13, HD5, or PB13	D13	MODC/$\overline{\text{IRQC}}$
A11	HAD23 or HD15	C5	HC1/$\overline{\text{HBE1}}$, HA1, or PB17	D14	NC
A12	HAD24 or HD16	C6	$\overline{\text{HREQ}}$ or $\overline{\text{HTA}}$	D15	MODB/$\overline{\text{IRQB}}$
A13	HAD27 or HD19	C7	$\overline{\text{HLOCK}}$, $\overline{\text{HBS}}$, or PB23	D16	D23
A14	HAD30 or HD22	C8	$\overline{\text{HFRAME}}$	E1	HAD2, HA5, or PB2
A15	NC	C9	HAD18 or HD10	E2	HAD4, HA7, or PB4
B1	NC	C10	HAD21 or HD13	E3	HAD6, HA9, or PB6
B2	NC	C11	HC3/$\overline{\text{HBE3}}$ or PB19	E4	HC0/$\overline{\text{HBE0}}$, HA0, or PB16
B3	HAD14, HD6, or PB14	C12	HAD26 or HD18	E5	V_{CC}
B4	$\overline{\text{HGNT}}$ or HAEN	C13	MODD/$\overline{\text{IRQD}}$	E6	V_{CC}
B5	$\overline{\text{HRST}}$/HRST	C14	NC	E7	V_{CC}
B6	$\overline{\text{HSERR}}$ or $\overline{\text{HIRQ}}$	C15	NC	E8	V_{CC}
B7	$\overline{\text{HDEVSEL}}$, $\overline{\text{HSAK}}$, or PB22	C16	NC	E9	V_{CC}
B8	HIDSEL or $\overline{\text{HRD}}$/$\overline{\text{HDS}}$	D1	HAD5, HA8, or PB5	E10	V_{CC}
B9	HC2/$\overline{\text{HBE2}}$, HA2, or PB18	D2	HAD7, HA10, or PB7	E11	V_{CC}
B10	HAD19 or HD11	D3	HAD9, HD1, or PB9	E12	V_{CC}
B11	HAD22 or HD14	D4	HAD10, HD2, or PB10	E13	V_{CC}

Because of an order from the United States International Trade Commission, BGA-packaged product lines and part numbers indicated here currently are not available from Freescale for import or sale in the United States prior to September 2010: DSP56301

Downloaded from Elcodis.com electronic components distributor

Table 3-3. DSP56301 MAP-BGA Signal Identification by Pin Number (Continued)

Pin No.	Signal Name	Pin No.	Signal Name	Pin No.	Signal Name
E14	MODA/$\overline{\text{IRQA}}$	G7	GND	H16	D8
E15	D22	G8	GND	J1	SC11 or PD1
E16	D21	G9	GND	J2	SC12 or PD2
F1	HAD1, HA4, or PB1	G10	GND	J3	TXD or PE1
F2	HAD0, HA3, or PB0	G11	GND	J4	SC10 or PD0
F3	HAD3, HA6, or PB3	G12	V_{CC}	J5	V_{CC}
F4	V_{CC}	G13	D12	J6	GND
F5	V_{CC}	G14	D15	J7	GND
F6	GND	G15	D16	J8	GND
F7	GND	G16	D14	J9	GND
F8	GND	H1	SCLK or PE2	J10	GND
F9	GND	H2	$\overline{\text{HINTA}}$	J11	GND
F10	GND	H3	TIO0	J12	V_{CC}
F11	GND	H4	V_{CC}	J13	V_{CC}
F12	V_{CC}	H5	V_{CC}	J14	D5
F13	D18	H6	GND	J15	D10
F14	D19	H7	GND	J16	D7
F15	D20	H8	GND	K1	STD1 or PD5
F16	D17	H9	GND	K2	SCK1 or PD3
G1	TIO1	H10	GND	K3	SCK0 or PC3
G2	RXD or PE0	H11	GND	K4	SRD0 or PC4
G3	TIO2	H12	V_{CC}	K5	V_{CC}
G4	V_{CC}	H13	D11	K6	GND
G5	V_{CC}	H14	D9	K7	GND
G6	GND	H15	D13	K8	GND

Because of an order from the United States International Trade Commission, BGA-packaged product lines and part numbers indicated here currently are not available from Freescale for import or sale in the United States prior to September 2010: DSP56301

Downloaded from Elcodis.com electronic components distributor

Table 3-3. DSP56301 MAP-BGA Signal Identification by Pin Number (Continued)

Pin No.	Signal Name	Pin No.	Signal Name	Pin No.	Signal Name
K9	GND	M2	$\overline{DE}$	N11	V_{CC}
K10	GND	M3	TDO	N12	V_{CC}
K11	GND	M4	TMS	N13	A16
K12	V_{CC}	M5	V_{CC}	N14	A17
K13	V_{CC}	M6	V_{CC}	N15	A20
K14	D3	M7	V_{CC}	N16	NC
K15	D6	M8	V_{CC}	P1	$\overline{TRST}$
K16	D4	M9	V_{CC}	P2	$\overline{BS}$
L1	SRD1 or PD4	M10	V_{CC}	P3	AA0/$\overline{RAS0}$
L2	STD0 or PC5	M11	V_{CC}	P4	CLKOUT
L3	SC02 or PC2	M12	V_{CC}	P5	PINIT/$\overline{NMI}$
L4	SC01 or PC1	M13	A19	P6	GND_P
L5	V_{CC}	M14	A21	P7	$\overline{BG}$
L6	GND	M15	A22	P8	AA3/$\overline{RAS3}$
L7	GND	M16	A23	P9	EXTAL
L8	GND	N1	TCK	P10	A5
L9	GND	N2	TDI	P11	A8
L10	GND	N3	NC	P12	A12
L11	GND	N4	$\overline{BL}$	P13	NC
L12	V_{CC}	N5	$\overline{TA}$	P14	A15
L13	V_{CC}	N6	V_{CC}	P15	NC
L14	D0	N7	V_{CC}	P16	A18
L15	D2	N8	V_{CC}	R1	NC
L16	D1	N9	A1	R2	NC
M1	SC00 or PC0	N10	A2	R3	AA1/$\overline{RAS1}$

Because of an order from the United States International Trade Commission, BGA-packaged product lines and part numbers indicated here currently are not available from Freescale for import or sale in the United States prior to September 2010: DSP56301

Downloaded from Elcodis.com electronic components distributor

Table 3-3. DSP56301 MAP-BGA Signal Identification by Pin Number (Continued)

Pin No.	Signal Name	Pin No.	Signal Name	Pin No.	Signal Name
R4	$\overline{CAS}$	R13	A11	T7	$\overline{BR}$
R5	V_{CCP}	R14	A14	T8	$\overline{WR}$
R6	$\overline{BB}$	R15	NC	T9	$\overline{RD}$
R7	AA2/$\overline{RAS2}$	R16	NC	T10	A0
R8	XTAL	T2	NC	T11	A4
R9	$\overline{BCLK}$	T3	BCLK	T12	A7
R10	A3	T4	$\overline{RESET}$	T13	A10
R11	A6	T5	PCAP	T14	A13
R12	A9	T6	GND_{P1}	T15	NC

Notes:

1. Signal names are based on configured functionality. Most connections supply a single signal. Some connections provide a signal with dual functionality, such as the MODx/$\overline{IRQx}$ pins that select an operating mode after $\overline{RESET}$ is deasserted, but act as interrupt lines during operation. Some signals have configurable polarity; these names are shown with and without overbars, such as $\overline{HAS}$/HAS. Some connections have two or more configurable functions; names assigned to these connections indicate the function for a specific configuration. For example, connection N2 is data line H7 in non-multiplexed bus mode, data/address line HAD7 in multiplexed bus mode, or GPIO line PB7 when the GPIO function is enabled for this pin. Unlike the TQFP package, most of the GND pins are connected internally in the center of the connection array and act as heat sink for the chip. Therefore, except for GND_P and GND_{P1} that support the PLL, other GND signals do not support individual subsystems in the chip.

2. NC stands for Not Connected. The following pin groups are shorted to each other:
— pins A2, B1, and B2
— pins A15, B15, B16, C14, C15, C16, and D14
— pins N3, R1, R2, and T2
— pins N16, P13, P15, R15, R16, and T15
Do not connect any line, component, trace, or via to these pins.

Because of an order from the United States International Trade Commission, BGA-packaged product lines and part numbers indicated here currently are not available from Freescale for import or sale in the United States prior to September 2010: DSP56301

Downloaded from Elcodis.com electronic components distributor

Table 3-4. DSP56301 MAP-BGA Signal Identification by Name

Signal Name	Pin No.	Signal Name	Pin No.	Signal Name	Pin No.
A0	T10	AA2	R7	D22	E15
A1	N9	AA3	P8	D23	D16
A10	T13	$\overline{BB}$	R6	D3	K14
A11	R13	BCLK	T3	D4	K16
A12	P12	$\overline{BCLK}$	R9	D5	J14
A13	T14	$\overline{BG}$	P7	D6	K15
A14	R14	$\overline{BL}$	N4	D7	J16
A15	P14	$\overline{BR}$	T7	D8	H16
A16	N13	$\overline{BS}$	P2	D9	H14
A17	N14	$\overline{CAS}$	R4	$\overline{DE}$	M2
A18	P16	CLKOUT	P4	EXTAL	P9
A19	M13	D0	L14	GND	F10
A2	N10	D1	L16	GND	F11
A20	N15	D10	J15	GND	F6
A21	M14	D11	H13	GND	F7
A22	M15	D12	G13	GND	F8
A23	M16	D13	H15	GND	F9
A3	R10	D14	G16	GND	G10
A4	T11	D15	G14	GND	G11
A5	P10	D16	G15	GND	G6
A6	R11	D17	F16	GND	G7
A7	T12	D18	F13	GND	G8
A8	P11	D19	F14	GND	G9
A9	R12	D2	L15	GND	H10
AA0	P3	D20	F15	GND	H11
AA1	R3	D21	E16	GND	H6

Because of an order from the United States International Trade Commission, BGA-packaged product lines and part numbers indicated here currently are not available from Freescale for import or sale in the United States prior to September 2010: DSP56301

Downloaded from Elcodis.com electronic components distributor

Table 3-4. DSP56301 MAP-BGA Signal Identification by Name (Continued)

Signal Name	Pin No.	Signal Name	Pin No.	Signal Name	Pin No.
GND	H7	HA10	D2	HAD23	A11
GND	H8	HA2	B9	HAD24	A12
GND	H9	HA3	F2	HAD25	B12
GND	J10	HA4	F1	HAD26	C12
GND	J11	HA5	E1	HAD27	A13
GND	J6	HA6	F3	HAD28	D12
GND	J7	HA7	E2	HAD29	B13
GND	J8	HA8	D1	HAD3	F3
GND	J9	HA9	E3	HAD30	A14
GND	K10	HAD0	F2	HAD31	B14
GND	K11	HAD1	F1	HAD4	E2
GND	K6	HAD10	D4	HAD5	D1
GND	K7	HAD11	C2	HAD6	E3
GND	K8	HAD12	C3	HAD7	D2
GND	K9	HAD13	C4	HAD8	C1
GND	L10	HAD14	B3	HAD9	D3
GND	L11	HAD15	A3	HAEN	B4
GND	L6	HAD16	A8	$\overline{\text{HBE0}}$	E4
GND	L7	HAD17	A9	$\overline{\text{HBE1}}$	C5
GND	L8	HAD18	C9	$\overline{\text{HBE2}}$	B9
GND	L9	HAD19	B10	$\overline{\text{HBE3}}$	C11
GND_{P1}	T6	HAD2	E1	$\overline{\text{HBS}}$	C7
GND_{P}	P6	HAD20	A10	HC0	E4
HA0	E4	HAD21	C10	HC1	C5
HA1	C5	HAD22	B11	HC2	B9

Because of an order from the United States International Trade Commission, BGA-packaged product lines and part numbers indicated here currently are not available from Freescale for import or sale in the United States prior to September 2010: DSP56301

Downloaded from Elcodis.com electronic components distributor

Table 3-4. DSP56301 MAP-BGA Signal Identification by Name (Continued)

Signal Name	Pin No.	Signal Name	Pin No.	Signal Name	Pin No.
HC3	C11	HD9	A9	$\overline{\text{HWR}}$	D7
HCLK	A4	$\overline{\text{HDAK}}$	A5	$\overline{\text{IRQA}}$	E14
HD0	C1	$\overline{\text{HDBDR}}$	A7	$\overline{\text{IRQB}}$	D15
HD1	D3	$\overline{\text{HDBEN}}$	D8	$\overline{\text{IRQC}}$	D13
HD10	C9	$\overline{\text{HDEVSEL}}$	B7	$\overline{\text{IRQD}}$	C13
HD11	B10	HDRQ	A6	MODA	E14
HD12	A10	$\overline{\text{HDS}}$	B8	MODB	D15
HD13	C10	$\overline{\text{HFRAME}}$	C8	MODC	D13
HD14	B11	$\overline{\text{HGNT}}$	B4	MODD	C13
HD15	A11	$\overline{\text{HIDSEL}}$	B8	NC	A15
HD16	A12	$\overline{\text{HINTA}}$	H2	NC	A2
HD17	B12	$\overline{\text{HIRDY}}$	A7	NC	B1
HD18	C12	$\overline{\text{HIRQ}}$	B6	NC	B15
HD19	A13	$\overline{\text{HLOCK}}$	C7	NC	B16
HD2	D4	HPAR	A5	NC	B2
HD20	D12	$\overline{\text{HPERR}}$	A6	NC	C14
HD21	B13	$\overline{\text{HRD}}$	B8	NC	C15
HD22	A14	$\overline{\text{HREQ}}$	C6	NC	C16
HD23	B14	$\overline{\text{HRST}}$/HRST	B5	NC	D14
HD3	C2	HRW	D7	NC	N16
HD4	C3	$\overline{\text{HSAK}}$	B7	NC	N3
HD5	C4	$\overline{\text{HSERR}}$	B6	NC	P13
HD6	B3	$\overline{\text{HSTOP}}$	D7	NC	P15
HD7	A3	$\overline{\text{HTA}}$	C6	NC	R1
HD8	A8	$\overline{\text{HTRDY}}$	D8	NC	R2

Because of an order from the United States International Trade Commission, BGA-packaged product lines and part numbers indicated here currently are not available from Freescale for import or sale in the United States prior to September 2010: DSP56301

Downloaded from Elcodis.com electronic components distributor

Table 3-4. DSP56301 MAP-BGA Signal Identification by Name (Continued)

Signal Name	Pin No.	Signal Name	Pin No.	Signal Name	Pin No.
NC	R15	PB6	E3	$\overline{\text{RAS3}}$	P8
NC	R16	PB7	D2	$\overline{\text{RD}}$	T9
NC	T2	PB8	C1	$\overline{\text{RESET}}$	T4
NC	T15	PB9	D3	RXD	G2
$\overline{\text{NMI}}$	P5	PC0	M1	SC00	M1
PB0	F2	PC1	L4	SC01	L4
PB1	F1	PC2	L3	SC02	L3
PB10	D4	PC3	K3	SC10	J4
PB11	C2	PC4	K4	SC11	J1
PB12	C3	PC5	L2	SC12	J2
PB13	C4	PCAP	T5	SCK0	K3
PB14	B3	PD0	J4	SCK1	K2
PB15	A3	PD1	J1	SCLK	H1
PB16	E4	PD2	J2	SRD0	K4
PB17	C5	PD3	K2	SRD1	L1
PB18	B9	PD4	L1	STD0	L2
PB19	C11	PD5	K1	STD1	K1
PB2	E1	PE0	G2	$\overline{\text{TA}}$	N5
PB20	D8	PE1	J3	TCK	N1
PB21	A7	PE2	H1	TDI	N2
PB22	B7	PINIT	P5	TDO	M3
PB23	C7	PVCL	D6	TIO0	H3
PB3	F3	$\overline{\text{RAS0}}$	P3	TIO1	G1
PB4	E2	$\overline{\text{RAS1}}$	R3	TIO2	G3
PB5	D1	$\overline{\text{RAS2}}$	R7	TMS	M4

Because of an order from the United States International Trade Commission, BGA-packaged product lines and part numbers indicated here currently are not available from Freescale for import or sale in the United States prior to September 2010: DSP56301

Downloaded from Elcodis.com electronic components distributor

Table 3-4. DSP56301 MAP-BGA Signal Identification by Name (Continued)

Signal Name	Pin No.	Signal Name	Pin No.	Signal Name	Pin No.
$\overline{TRST}$	P1	V_{CC}	F5	V_{CC}	M10
TXD	J3	V_{CC}	G12	V_{CC}	M11
V_{CC}	D10	V_{CC}	G4	V_{CC}	M12
V_{CC}	D11	V_{CC}	G5	V_{CC}	M5
V_{CC}	D5	V_{CC}	H12	V_{CC}	M6
V_{CC}	D9	V_{CC}	H4	V_{CC}	M7
V_{CC}	E10	V_{CC}	H5	V_{CC}	M8
V_{CC}	E11	V_{CC}	J12	V_{CC}	M9
V_{CC}	E12	V_{CC}	J13	V_{CC}	N11
V_{CC}	E13	V_{CC}	J5	V_{CC}	N12
V_{CC}	E5	V_{CC}	K12	V_{CC}	N6
V_{CC}	E6	V_{CC}	K13	V_{CC}	N7
V_{CC}	E7	V_{CC}	K5	V_{CC}	N8
V_{CC}	E8	V_{CC}	L12	V_{CCP}	R5
V_{CC}	E9	V_{CC}	L13	$\overline{WR}$	T8
V_{CC}	F12	V_{CC}	L5	XTAL	R8
V_{CC}	F4				

Note: NC stands for Not Connected. The following pin groups are shorted to each other:
—pins A2, B1, and B2
—pins A15, B15, B16, C14, C15, C16, and D14
—pins N3, R1, R2, and T2
—pins N16, P13, P15, R15, R16, and T15
Do not connect any line, component, trace, or via to these pins.

Because of an order from the United States International Trade Commission, BGA-packaged product lines and part numbers indicated here currently are not available from Freescale for import or sale in the United States prior to September 2010: DSP56301

Downloaded from Elcodis.com electronic components distributor

3.4 MAP-BGA Package Mechanical Drawing

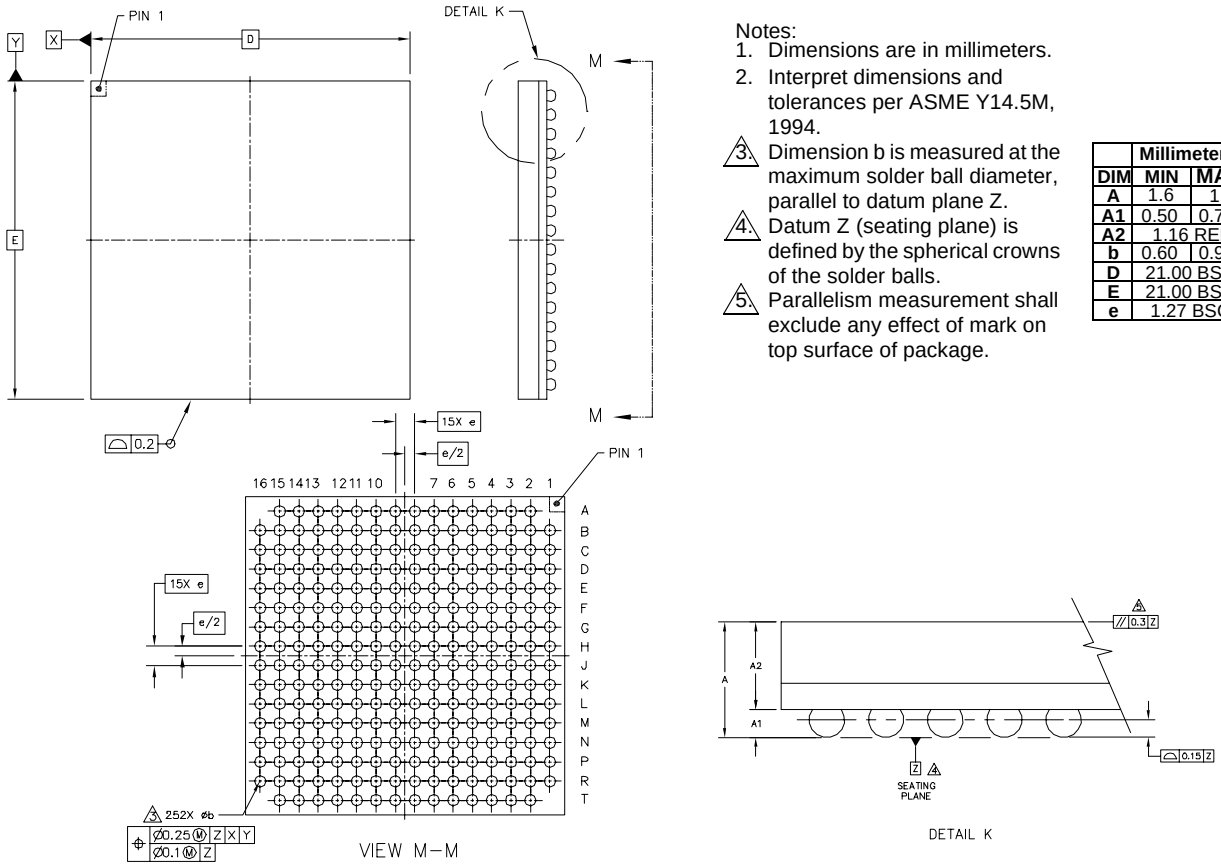

Notes:
1. Dimensions are in millimeters.
2. Interpret dimensions and tolerances per ASME Y14.5M, 1994.
3. Dimension b is measured at the maximum solder ball diameter, parallel to datum plane Z.
4. Datum Z (seating plane) is defined by the spherical crowns of the solder balls.
5. Parallelism measurement shall exclude any effect of mark on top surface of package.

	Millimeters	
DIM	MIN	MAX
A	1.6	1.9
A1	0.50	0.70
A2	1.16 REF	
b	0.60	0.90
D	21.00 BSC	
E	21.00 BSC	
e	1.27 BSC	

Figure 3-6. DSP56301 Mechanical Information, 252-pin MAP-BGA Package

Because of an order from the United States International Trade Commission, BGA-packaged product lines and part numbers indicated here currently are not available from Freescale for import or sale in the United States prior to September 2010: DSP56301

Downloaded from Elcodis.com electronic components distributor

Because of an order from the United States International Trade Commission, BGA-packaged product lines and part numbers indicated here currently are not available from Freescale for import or sale in the United States prior to September 2010: DSP56301

Downloaded from Elcodis.com electronic components distributor

Design Considerations 4

4.1 Thermal Design Considerations

An estimate of the chip junction temperature, T_J, in °C can be obtained from this equation:

Equation 1: $T_J = T_A + (P_D \times R_{\theta JA})$

Where:

T_A	=	ambient temperature °C
$R_{\theta JA}$	=	package junction-to-ambient thermal resistance °C/W
P_D	=	power dissipation in package

Historically, thermal resistance has been expressed as the sum of a junction-to-case thermal resistance and a case-to-ambient thermal resistance, as in this equation:

Equation 2: $R_{\theta JA} = R_{\theta JC} + R_{\theta CA}$

Where:

$R_{\theta JA}$	=	package junction-to-ambient thermal resistance °C/W
$R_{\theta JC}$	=	package junction-to-case thermal resistance °C/W
$R_{\theta CA}$	=	package case-to-ambient thermal resistance °C/W

$R_{\theta JC}$ is device-related and cannot be influenced by the user. The user controls the thermal environment to change the case-to-ambient thermal resistance, $R_{\theta CA}$. For example, the user can change the air flow around the device, add a heat sink, change the mounting arrangement on the printed circuit board (PCB) or otherwise change the thermal dissipation capability of the area surrounding the device on a PCB. This model is most useful for ceramic packages with heat sinks; some 90 percent of the heat flow is dissipated through the case to the heat sink and out to the ambient environment. For ceramic packages, in situations where the heat flow is split between a path to the case and an alternate path through the PCB, analysis of the device thermal performance may need the additional modeling capability of a system-level thermal simulation tool.

The thermal performance of plastic packages is more dependent on the temperature of the PCB to which the package is mounted. Again, if the estimates obtained from $R_{\theta JA}$ do not satisfactorily answer whether the thermal performance is adequate, a system-level model may be appropriate.

A complicating factor is the existence of three common ways to determine the junction-to-case thermal resistance in plastic packages.

- To minimize temperature variation across the surface, the thermal resistance is measured from the junction to the outside surface of the package (case) closest to the chip mounting area when that surface has a proper heat sink.
- To define a value approximately equal to a junction-to-board thermal resistance, the thermal resistance is measured from the junction to the point at which the leads attach to the case.

Because of an order from the United States International Trade Commission, BGA-packaged product lines and part numbers indicated here currently are not available from Freescale for import or sale in the United States prior to September 2010: DSP56301

Downloaded from Elcodis.com electronic components distributor

- If the temperature of the package case (T_T) is determined by a thermocouple, thermal resistance is computed from the value obtained by the equation $(T_J – T_T)/P_D$.

As noted earlier, the junction-to-case thermal resistances quoted in this data sheet are determined using the first definition. From a practical standpoint, that value is also suitable to determine the junction temperature from a case thermocouple reading in forced convection environments. In natural convection, the use of the junction-to-case thermal resistance to estimate junction temperature from a thermocouple reading on the case of the package will yield an estimate of a junction temperature slightly higher than actual temperature. Hence, the new thermal metric, thermal characterization parameter or Ψ_{JT}, has been defined to be $(T_J – T_T)/P_D$. This value gives a better estimate of the junction temperature in natural convection when the surface temperature of the package is used. Remember that surface temperature readings of packages are subject to significant errors caused by inadequate attachment of the sensor to the surface and to errors caused by heat loss to the sensor. The recommended technique is to attach a 40-gauge thermocouple wire and bead to the top center of the package with thermally conductive epoxy.

4.2 Electrical Design Considerations

CAUTION

This device contains protective circuitry to guard against damage due to high static voltage or electrical fields. However, normal precautions are advised to avoid application of any voltages higher than maximum rated voltages to this high-impedance circuit. Reliability of operation is enhanced if unused inputs are tied to an appropriate logic voltage level (for example, either GND or V_{CC}).

Use the following list of recommendations to ensure correct DSP operation.

- Provide a low-impedance path from the board power supply to each V_{CC} pin on the DSP and from the board ground to each GND pin.
- Use at least six 0.01–0.1 µF bypass capacitors positioned as close as possible to the four sides of the package to connect the V_{CC} power source to GND.
- Ensure that capacitor leads and associated printed circuit traces that connect to the chip V_{CC} and GND pins are less than 0.5 inch per capacitor lead.
- Use at least a four-layer PCB with two inner layers for V_{CC} and GND.
- Because the DSP output signals have fast rise and fall times, PCB trace lengths should be minimal. This recommendation particularly applies to the address and data buses as well as the $\overline{IRQA}$, $\overline{IRQB}$, $\overline{IRQC}$, $\overline{IRQD}$, $\overline{TA}$, and $\overline{BG}$ pins. Maximum PCB trace lengths on the order of 6 inches are recommended.
- Consider all device loads as well as parasitic capacitance due to PCB traces when you calculate capacitance. This is especially critical in systems with higher capacitive loads that could create higher transient currents in the V_{CC} and GND circuits.
- All inputs must be terminated (that is, not allowed to float) by CMOS levels except for the three pins with internal pull-up resistors ($\overline{TRST}$, TMS, $\overline{DE}$).
- Take special care to minimize noise levels on the V_{CCP}, GND_P, and GND_{P1} pins.
- The following pins must be asserted after power-up: $\overline{RESET}$ and $\overline{TRST}$.

Because of an order from the United States International Trade Commission, BGA-packaged product lines and part numbers indicated here currently are not available from Freescale for import or sale in the United States prior to September 2010: DSP56301

Downloaded from Elcodis.com electronic components distributor

- If multiple DSP devices are on the same board, check for cross-talk or excessive spikes on the supplies due to synchronous operation of the devices.
- $\overline{\text{RESET}}$ must be asserted when the chip is powered up. A stable EXTAL signal should be supplied before deassertion of $\overline{\text{RESET}}$.
- At power-up, ensure that the voltage difference between the 5 V tolerant pins and the chip V_{CC} never exceeds 3.5 V.

4.3 Power Consumption Considerations

Power dissipation is a key issue in portable DSP applications. Some of the factors affecting current consumption are described in this section. Most of the current consumed by CMOS devices is alternating current (ac), which is charging and discharging the capacitances of the pins and internal nodes.

Current consumption is described by this formula:

Equation 3: $I = C \times V \times f$

Where:

C	=	node/pin capacitance
V	=	voltage swing
f	=	frequency of node/pin toggle

Example 1. Current Consumption

For a Port A address pin loaded with 50 pF capacitance, operating at 3.3 V, with a 66 MHz clock, toggling at its maximum possible rate (33 MHz), the current consumption is expressed in **Equation 4**.

Equation 4: $I = 50 \times 10^{-12} \times 3.3 \times 33 \times 10^{6} = 5.48\ mA$

The maximum internal current (I_{CCI}max) value reflects the typical possible switching of the internal buses on best-case operation conditions—not necessarily a real application case. The typical internal current (I_{CCItyp}) value reflects the average switching of the internal buses on typical operating conditions. Perform the following steps for applications that require very low current consumption:

1. Set the EBD bit when you are not accessing external memory.
2. Minimize external memory accesses, and use internal memory accesses.
3. Minimize the number of pins that are switching.
4. Minimize the capacitive load on the pins.
5. Connect the unused inputs to pull-up or pull-down resistors.
6. Disable unused peripherals.
7. Disable unused pin activity (for example, CLKOUT, XTAL).

One way to evaluate power consumption is to use a current-per-MIPS measurement methodology to minimize specific board effects (that is, to compensate for measured board current not caused by the DSP). A benchmark power consumption test algorithm is listed in **Appendix A**. Use the test algorithm, specific test current measurements, and the following equation to derive the current-per-MIPS value.

Because of an order from the United States International Trade Commission, BGA-packaged product lines and part numbers indicated here currently are not available from Freescale for import or sale in the United States prior to September 2010: DSP56301

Downloaded from Elcodis.com electronic components distributor

Equation 5: $I/\text{MIPS} = I/\text{MHz} = (I_{typF2} - I_{typF1})/(F2 - F1)$

Where:

I_{typF2}	=	current at F2
I_{typF1}	=	current at F1
F2	=	high frequency (any specified operating frequency)
F1	=	low frequency (any specified operating frequency lower than F2)

Note: F1 should be significantly less than F2. For example, F2 could be 66 MHz and F1 could be 33 MHz. The degree of difference between F1 and F2 determines the amount of precision with which the current rating can be determined for an application.

4.4 PLL Performance Issues

The following explanations should be considered as general observations on expected PLL behavior. There is no test that replicates these exact numbers. These observations were measured on a limited number of parts and were not verified over the entire temperature and voltage ranges.

4.4.1 Phase Skew Performance

The phase skew of the PLL is defined as the time difference between the falling edges of EXTAL and CLKOUT for a given capacitive load on CLKOUT, over the entire process, temperature and voltage ranges. As defined in **Figure 2-2**, *External Clock Timing*, on page -5 for input frequencies greater than 15 MHz and the MF ≤ 4, this skew is greater than or equal to 0.0 ns and less than 1.8 ns; otherwise, this skew is not guaranteed. However, for MF < 10 and input frequencies greater than 10 MHz, this skew is between –1.4 ns and +3.2 ns.

4.4.2 Phase Jitter Performance

The phase jitter of the PLL is defined as the variations in the skew between the falling edges of EXTAL and CLKOUT for a given device in specific temperature, voltage, input frequency, MF, and capacitive load on CLKOUT. These variations are a result of the PLL locking mechanism. For input frequencies greater than 15 MHz and MF ≤ 4, this jitter is less than ±0.6 ns; otherwise, this jitter is not guaranteed. However, for MF < 10 and input frequencies greater than 10 MHz, this jitter is less than ±2 ns.

4.4.3 Frequency Jitter Performance

The frequency jitter of the PLL is defined as the variation of the frequency of CLKOUT. For small MF (MF < 10) this jitter is smaller than 0.5 per cent. For mid-range MF (10 < MF < 500) this jitter is between 0.5 per cent and approximately 2 per cent. For large MF (MF > 500), the frequency jitter is 2–3 per cent.

4.5 Input (EXTAL) Jitter Requirements

The allowed jitter on the frequency of EXTAL is 0.5 percent. If the rate of change of the frequency of EXTAL is slow (that is, it does not jump between the minimum and maximum values in one cycle) or the frequency of the jitter is fast (that is, it does not stay at an extreme value for a long time), then the allowed jitter can be 2 percent. The phase and frequency jitter performance results are valid only if the input jitter is less than the prescribed values.

Because of an order from the United States International Trade Commission, BGA-packaged product lines and part numbers indicated here currently are not available from Freescale for import or sale in the United States prior to September 2010: DSP56301

Downloaded from Elcodis.com electronic components distributor

Power Consumption Benchmark A

The following benchmark program permits evaluation of DSP power usage in a test situation. It enables the PLL, disables the external clock, and uses repeated multiply-accumulate (MAC) instructions with a set of synthetic DSP application data to emulate intensive sustained DSP operation.

```
;*************************************************************************
;*************************************************************************
;*                                                        *
;* CHECKS   Typical Power Consumption                                  *
;*                                                       *
;*************************************************************************

       page   200,55,0,0,0
       nolist

I_VEC EQU$000000; Interrupt vectors for program debug only
START EQU$8000 ; MAIN (external) program starting address
INT_PROG EQU$100 ; INTERNAL program memory starting address
INT_XDAT EQU$0 ; INTERNAL X-data memory starting address
INT_YDAT EQU$0 ; INTERNAL Y-data memory starting address

       INCLUDE "ioequ.asm"
       INCLUDE "intequ.asm"

       list

       org    P:START
;
       movep #$0123FF,x:M_BCR; BCR: Area 3 : 1 w.s (SRAM)
; Area 2 : 0 w.s (SSRAM)
; Default: 1 w.s (SRAM)
;
       movep  #$0d0000,x:M_PCTL; XTAL disable
; PLL enable
; CLKOUT disable
;
;Load the program
;
       move   #INT_PROG,r0
       move   #PROG_START,r1
       do     #(PROG_END-PROG_START),PLOAD_LOOP
       move   p:(r1)+,x0
       move   x0,p:(r0)+
       nop
PLOAD_LOOP
;
; Load the X-data
;
       move   #INT_XDAT,r0
       move   #XDAT_START,r1
```

Because of an order from the United States International Trade Commission, BGA-packaged product lines and part numbers indicated here currently are not available from Freescale for import or sale in the United States prior to September 2010: DSP56301

Downloaded from Elcodis.com electronic components distributor

```
        do      #(XDAT_END-XDAT_START),XLOAD_LOOP
        move    p:(r1)+,x0
        move    x0,x:(r0)+
XLOAD_LOOP
;
;Load the Y-data
;
        move    #INT_YDAT,r0
        move    #YDAT_START,r1
        do      #(YDAT_END-YDAT_START),YLOAD_LOOP
        move    p:(r1)+,x0
        move    x0,y:(r0)+
YLOAD_LOOP
;

        jmp     INT_PROG

PROG_START
        move    #$0,r0
        move    #$0,r4
        move    #$3f,m0
        move    #$3f,m4
;
        clr     a
        clr     b
        move    #$0,x0
        move    #$0,x1
        move    #$0,y0
        move    #$0,y1
        bset    #4,omr          ; ebd
;
sbr     dor     #60,_end
        mac     x0,y0,ax:(r0)+,x1     y:(r4)+,y1
        mac     x1,y1,ax:(r0)+,x0     y:(r4)+,y0
        add     a,b
        mac     x0,y0,ax:(r0)+,x1
        mac     x1,y1,a               y:(r4)+,y0
        move    b1,x:$ff
_end
        bra     sbr
        nop
        nop
        nop
        nop
PROG_END
        nop
        nop


XDAT_START
;       org     x:0
        dc      $262EB9
        dc      $86F2FE
        dc      $E56A5F
        dc      $616CAC
        dc      $8FFD75
        dc      $9210A
        dc      $A06D7B
        dc      $CEA798
        dc      $8DFBF1
        dc      $A063D6
```

Because of an order from the United States International Trade Commission, BGA-packaged product lines and part numbers indicated here currently are not available from Freescale for import or sale in the United States prior to September 2010: DSP56301

Downloaded from Elcodis.com electronic components distributor

```
        dc      $6C6657
        dc      $C2A544
        dc      $A3662D
        dc      $A4E762
        dc      $84F0F3
        dc      $E6F1B0
        dc      $B3829
        dc      $8BF7AE
        dc      $63A94F
        dc      $EF78DC
        dc      $242DE5
        dc      $A3E0BA
        dc      $EBAB6B
        dc      $8726C8
        dc      $CA361
        dc      $2F6E86
        dc      $A57347
        dc      $4BE774
        dc      $8F349D
        dc      $A1ED12
        dc      $4BFCE3
        dc      $EA26E0
        dc      $CD7D99
        dc      $4BA85E
        dc      $27A43F
        dc      $A8B10C
        dc      $D3A55
        dc      $25EC6A
        dc      $2A255B
        dc      $A5F1F8
        dc      $2426D1
        dc      $AE6536
        dc      $CBBC37
        dc      $6235A4
        dc      $37F0D
        dc      $63BEC2
        dc      $A5E4D3
        dc      $8CE810
        dc      $3FF09
        dc      $60E50E
        dc      $CFFB2F
        dc      $40753C
        dc      $8262C5
        dc      $CA641A
        dc      $EB3B4B
        dc      $2DA928
        dc      $AB6641
        dc      $28A7E6
        dc      $4E2127
        dc      $482FD4
        dc      $7257D
        dc      $E53C72
        dc      $1A8C3
        dc      $E27540
XDAT_END

YDAT_START
;       org     y:0
        dc      $5B6DA
        dc      $C3F70B
```

Because of an order from the United States International Trade Commission, BGA-packaged product lines and part numbers indicated here currently are not available from Freescale for import or sale in the United States prior to September 2010: DSP56301

Downloaded from Elcodis.com electronic components distributor

```
dc      $6A39E8
dc      $81E801
dc      $C666A6
dc      $46F8E7
dc      $AAEC94
dc      $24233D
dc      $802732
dc      $2E3C83
dc      $A43E00
dc      $C2B639
dc      $85A47E
dc      $ABFDDF
dc      $F3A2C
dc      $2D7CF5
dc      $E16A8A
dc      $ECB8FB
dc      $4BED18
dc      $43F371
dc      $83A556
dc      $E1E9D7
dc      $ACA2C4
dc      $8135AD
dc      $2CE0E2
dc      $8F2C73
dc      $432730
dc      $A87FA9
dc      $4A292E
dc      $A63CCF
dc      $6BA65C
dc      $E06D65
dc      $1AA3A
dc      $A1B6EB
dc      $48AC48
dc      $EF7AE1
dc      $6E3006
dc      $62F6C7
dc      $6064F4
dc      $87E41D
dc      $CB2692
dc      $2C3863
dc      $C6BC60
dc      $43A519
dc      $6139DE
dc      $ADF7BF
dc      $4B3E8C
dc      $6079D5
dc      $E0F5EA
dc      $8230DB
dc      $A3B778
dc      $2BFE51
dc      $E0A6B6
dc      $68FFB7
dc      $28F324
dc      $8F2E8D
dc      $667842
dc      $83E053
dc      $A1FD90
dc      $6B2689
dc      $85B68E
dc      $622EAF
```

Because of an order from the United States International Trade Commission, BGA-packaged product lines and part numbers indicated here currently are not available from Freescale for import or sale in the United States prior to September 2010: DSP56301

Downloaded from Elcodis.com electronic components distributor

```
        dc      $6162BC
        dc      $E4A245
YDAT_END
;*************************************************************************
;
;       EQUATES for DSP56301 I/O registers and ports
;       Reference: DSP56301 Specifications Revision 3.00
;
;       Last update:   November 15 1993
;          Changes:    GPIO for ports C,D and E,
;                      HI32
;                      DMA status reg
;                           PLL control reg
;                      AAR
;                      SCI registers address
;                      SSI registers addr. + split TSR from SSISR
;
        December 19 1993 (cosmetic - page and opt directives)
;       August    9 1994 ESSI and SCI control registers bit update
;
;*************************************************************************

        page    132,55,0,0,0
        opt     mex

ioequ   ident   1,0

;-------------------------------------------------------------------------
;
;        EQUATES for I/O Port Programming
;
;-------------------------------------------------------------------------

;        Register Addresses

M_DATH EQU $FFFFCF ; Host port GPIO data Register
M_DIRH EQU $FFFFCE; Host port GPIO direction Register
M_PCRC EQU $FFFFBF; Port C Control Register
M_PRRC EQU $FFFFBE; Port C Direction Register
M_PDRC EQU $FFFFBD ; Port C GPIO Data Register
M_PCRD EQU $FFFFAF ; Port D Control register
M_PRRD EQU $FFFFAE ; Port D Direction Data Register
M_PDRD EQU $FFFFAD; Port D GPIO Data Register
M_PCRE EQU $FFFF9F; Port E Control register
M_PRRE EQU $FFFF9E; Port E Direction Register
M_PDRE EQU $FFFF9D; Port E Data Register
M_OGDB EQU $FFFFFC; OnCE GDB Register

;-------------------------------------------------------------------------
;
;     EQUATES for Host Interface
;
;-------------------------------------------------------------------------

;    Register Addresses

M_DTXS EQU $FFFFCD ; DSP SLAVE TRANSMIT DATA FIFO (DTXS)
M_DTXM EQU $FFFFCC; DSP MASTER TRANSMIT DATA FIFO (DTXM)
M_DRXR EQU $FFFFCB; DSP RECEIVE DATA FIFO (DRXR)
M_DPSR EQU $FFFFCA; DSP PCI STATUS REGISTER (DPSR)
```

Because of an order from the United States International Trade Commission, BGA-packaged product lines and part numbers indicated here currently are not available from Freescale for import or sale in the United States prior to September 2010: DSP56301

Downloaded from Elcodis.com electronic components distributor

```
M_DSR EQU $FFFFC9; DSP STATUS REGISTER (DSR)
M_DPAR EQU $FFFFC8; DSP PCI ADDRESS REGISTER (DPAR)
M_DPMC EQU $FFFFC7; DSP PCI MASTER CONTROL REGISTER (DPMC)
M_DPCR EQU $FFFFC6; DSP PCI CONTROL REGISTER (DPCR)
M_DCTR EQU $FFFFC5 ; DSP CONTROL REGISTER (DCTR)

;       Host Control Register Bit Flags

M_HCIE EQU 0   ; Host Command Interrupt Enable
M_STIE EQU 1   ; Slave Transmit Interrupt Enable
M_SRIE EQU 2   ; Slave Receive Interrupt Enable
M_HF35 EQU $38 ; Host Flags 5-3 Mask
M_HF3 EQU 3    ; Host Flag 3
M_HF4 EQU 4    ; Host Flag 4
M_HF5 EQU 5    ; Host Flag 5
M_HINT EQU 6   ; Host Interrupt A
M_HDSM EQU 13  ; Host Data Strobe Mode
M_HRWP EQU 14  ; Host RD/WR Polarity
M_HTAP EQU 15  ; Host Transfer Acknowledge Polarity
M_HDRP EQU 16  ; Host Dma Request Polarity
M_HRSP EQU 17  ; Host Reset Polarity
M_HIRP EQU 18  ; Host Interrupt  Request Polarity
M_HIRC EQU 19  ; Host Interupt Request Control
M_HM0 EQU 20   ; Host Interface Mode
M_HM1 EQU 21   ; Host Interface Mode
M_HM2 EQU 22   ; Host Interface Mode
M_HM EQU $700000 ; Host Interface Mode Mask

;       Host PCI Control Register Bit Flags

M_PMTIE EQU 1  ; PCI Master Transmit Interrupt Enable
M_PMRIE EQU 2  ; PCI Master Receive Interrupt Enable
M_PMAIE EQU 4  ; PCI Master Address Interrupt Enable
M_PPEIE EQU 5  ; PCI Parity Error Interrupt Enable
M_PTAIE EQU 7  ; PCI Transaction Abort Interrupt Enable
M_PTTIE EQU 9  ; PCI Transaction Termination Interrupt Enable
M_PTCIE EQU 12    ; PCI Transfer Complete Interrupt Enable
M_CLRT EQU 14  ; Clear Transmitter
M_MTT EQU 15   ; Master Transfer Terminate
M_SERF EQU 16  ; HSERR~ Force
M_MACE EQU 18  ; Master Access Counter Enable
M_MWSD EQU 19  ; Master Wait States Disable
M_RBLE EQU 20  ; Receive Buffer Lock Enable
M_IAE EQU 21   ; Insert Address Enable

;       Host PCI Master Control Register Bit Flags

M_ARH EQU $00ffff; DSP PCI Transaction Address (High)
M_BL EQU $3f0000; PCI Data Burst Length
M_FC EQU $c00000; Data Transfer Format Control

;       Host PCI Address Register Bit Flags

M_ARL EQU $00ffff; DSP PCI Transaction Address (Low)
M_C EQU $0f0000; PCI Bus Command
M_BE EQU $f00000; PCI Byte Enables

;       DSP Status Register Bit Flags

M_HCP EQU 0    ; Host Command pending
```

Because of an order from the United States International Trade Commission, BGA-packaged product lines and part numbers indicated here currently are not available from Freescale for import or sale in the United States prior to September 2010: DSP56301

Downloaded from Elcodis.com electronic components distributor

```
M_STRQ EQU 1   ; Slave Transmit Data Request
M_SRRQ EQU 2   ; Slave Receive Data Request
M_HF02 EQU $38 ; Host Flag 0-2 Mask
M_HF0 EQU 3    ; Host Flag 0
M_HF1 EQU 4    ; Host Flag 1
M_HF2 EQU 5    ; Host Flag 2

;       DSP PCI Status Register Bit Flags

M_MWS EQU 0    ; PCI Master Wait States
M_MTRQ EQU 1   ; PCI Master Transmit Data Request
M_MRRQ EQU 2   ; PCI Master Receive Data Request
M_MARQ EQU 4   ; PCI Master Address Request
M_APER EQU 5      ; PCI Address Parity Error
M_DPER EQU 6      ; PCI Data Parity Error
M_MAB EQU 7      ; PCI Master Abort
M_TAB EQU 8      ; PCI Target Abort
M_TDIS EQU 9      ; PCI Target Disconnect
M_TRTY EQU 10     ; PCI Target Retry
M_TO EQU 11     ; PCI Time Out Termination
M_RDC EQU $3F0000; Remaining Data Count Mask (RDC5-RDC0)
M_RDC0 EQU 16     ; Remaining Data Count  0
M_RDC1 EQU 17     ; Remaining Data Count  1
M_RDC2 EQU 18     ; Remaining Data Count  2
M_RDC3 EQU 19     ; Remaining Data Count  3
M_RDC4 EQU 20     ; Remaining Data Count  4
M_RDC5 EQU 21     ; Remaining Data Count  5
M_HACT EQU 23     ; Hi32 Active


;-------------------------------------------------------------------------
;
;       EQUATES for Serial Communications Interface (SCI)
;
;-------------------------------------------------------------------------

;       Register Addresses

M_STXH EQU $FFFF97; SCI Transmit Data Register (high)
M_STXM EQU $FFFF96; SCI Transmit Data Register (middle)
M_STXL EQU $FFFF95; SCI Transmit Data Register (low)
M_SRXH EQU $FFFF9A; SCI Receive Data Register (high)
M_SRXM EQU $FFFF99; SCI Receive Data Register (middle)
M_SRXL EQU $FFFF98; SCI Receive Data Register (low)
M_STXA EQU $FFFF94; SCI Transmit Address Register
M_SCR EQU $FFFF9C; SCI Control Register
M_SSR EQU $FFFF93; SCI Status Register
M_SCCR EQU $FFFF9B; SCI Clock Control Register

;       SCI Control Register Bit Flags

M_WDS EQU $7     ; Word Select Mask (WDS0-WDS3)
M_WDS0 EQU 0      ; Word Select 0
M_WDS1 EQU 1      ; Word Select 1
M_WDS2 EQU 2      ; Word Select 2
M_SSFTD EQU 3      ; SCI Shift Direction
M_SBK EQU 4      ; Send Break
M_WAKE EQU 5      ; Wakeup Mode Select
M_RWU EQU 6      ; Receiver Wakeup Enable
M_WOMS EQU 7      ; Wired-OR Mode Select
```

Because of an order from the United States International Trade Commission, BGA-packaged product lines and part numbers indicated here currently are not available from Freescale for import or sale in the United States prior to September 2010: DSP56301

Downloaded from Elcodis.com electronic components distributor

```
M_SCRE EQU 8      ; SCI Receiver Enable
M_SCTE EQU 9      ; SCI Transmitter Enable
M_ILIE EQU 10     ; Idle Line Interrupt Enable
M_SCRIE EQU 11     ; SCI Receive Interrupt Enable
M_SCTIE EQU 12     ; SCI Transmit Interrupt Enable
M_TMIE EQU 13     ; Timer Interrupt Enable
M_TIR EQU 14     ; Timer Interrupt Rate
M_SCKP EQU 15     ; SCI Clock Polarity
M_REIE EQU 16     ; SCI Error Interrupt Enable (REIE)

;       SCI Status Register Bit Flags

M_TRNE EQU 0      ; Transmitter Empty
M_TDRE EQU 1      ; Transmit Data Register Empty
M_RDRF EQU 2      ; Receive Data Register Full
M_IDLE EQU 3      ; Idle Line Flag
M_OR EQU 4      ; Overrun Error Flag
M_PE EQU 5      ; Parity Error
M_FE EQU 6      ; Framing Error Flag
M_R8 EQU 7      ; Received Bit 8 (R8) Address

;       SCI Clock Control Register

M_CD EQU $FFF   ; Clock Divider Mask (CD0-CD11)
M_COD EQU 12     ; Clock Out Divider
M_SCP EQU 13     ; Clock Prescaler
M_RCM EQU 14     ; Receive Clock Mode Source Bit
M_TCM EQU 15     ; Transmit Clock Source Bit

;-------------------------------------------------------------------------
;
;      EQUATES for Synchronous Serial Interface (SSI)
;
;-------------------------------------------------------------------------

;
;       Register Addresses Of SSI0
M_TX00 EQU $FFFFBC; SSI0 Transmit Data Register 0
M_TX01 EQU $FFFFBB; SSIO Transmit Data Register 1
M_TX02 EQU $FFFFBA; SSIO Transmit Data Register 2
M_TSR0 EQU $FFFFB9; SSI0 Time Slot Register
M_RX0 EQU $FFFFB8; SSI0 Receive Data Register
M_SSISR0 EQU $FFFFB7; SSI0 Status Register
M_CRB0 EQU $FFFFB6; SSI0 Control Register B
M_CRA0 EQU $FFFFB5; SSI0 Control Register A
M_TSMA0 EQU $FFFFB4; SSI0 Transmit Slot Mask Register A
M_TSMB0 EQU $FFFFB3; SSI0 Transmit Slot Mask Register B
M_RSMA0 EQU $FFFFB2; SSI0 Receive Slot Mask Register A
M_RSMB0 EQU $FFFFB1; SSI0 Receive Slot Mask Register B

;       Register Addresses Of SSI1
M_TX10 EQU $FFFFAC; SSI1 Transmit Data Register 0
M_TX11 EQU $FFFFAB; SSI1 Transmit Data Register 1
M_TX12 EQU $FFFFAA; SSI1 Transmit Data Register 2
M_TSR1 EQU $FFFFA9; SSI1 Time Slot Register
M_RX1 EQU $FFFFA8; SSI1 Receive Data Register
M_SSISR1 EQU $FFFFA7; SSI1 Status Register
M_CRB1 EQU $FFFFA6; SSI1 Control Register B
M_CRA1 EQU $FFFFA5; SSI1 Control Register A
M_TSMA1 EQU $FFFFA4; SSI1 Transmit Slot Mask Register A
```

Because of an order from the United States International Trade Commission, BGA-packaged product lines and part numbers indicated here currently are not available from Freescale for import or sale in the United States prior to September 2010: DSP56301

Downloaded from Elcodis.com electronic components distributor

```
M_TSMB1 EQU $FFFFA3; SSI1 Transmit Slot Mask Register B
M_RSMA1 EQU $FFFFA2; SSI1 Receive Slot Mask Register A
M_RSMB1 EQU $FFFFA1; SSI1 Receive Slot Mask Register B

;       SSI Control Register A Bit Flags

M_PM EQU $FF    ; Prescale Modulus Select Mask (PM0-PM7)
M_PSR EQU 11     ; Prescaler Range
M_DC EQU $1F000 ; Frame Rate Divider Control Mask (DC0-DC7)
M_ALC EQU 18   ; Alignment Control (ALC)
M_WL EQU $380000; Word Length Control Mask (WL0-WL7)
M_SSC1 EQU 22  ; Select SC1 as TR #0 drive enable (SSC1)

;       SSI Control Register B Bit Flags

M_OF EQU $3    ; Serial Output Flag Mask
M_OF0 EQU 0    ; Serial Output Flag 0
M_OF1 EQU 1    ; Serial Output Flag 1
M_SCD EQU $1C  ; Serial Control Direction Mask
M_SCD0 EQU 2   ; Serial Control 0 Direction
M_SCD1 EQU 3      ; Serial Control 1 Direction
M_SCD2 EQU 4      ; Serial Control 2 Direction
M_SCKD EQU 5      ; Clock Source Direction
M_SHFD EQU 6      ; Shift Direction
M_FSL EQU $180 ; Frame Sync Length Mask (FSL0-FSL1)
M_FSL0 EQU 7   ; Frame Sync Length 0
M_FSL1 EQU 8   ; Frame Sync Length 1
M_FSR EQU 9    ; Frame Sync Relative Timing
M_FSP EQU 10   ; Frame Sync Polarity
M_CKP EQU 11   ; Clock Polarity
M_SYN EQU 12   ; Sync/Async Control
M_MOD EQU 13   ; SSI Mode Select
M_SSTE EQU $1C000; SSI Transmit enable Mask
M_SSTE2 EQU 14 ; SSI Transmit #2 Enable
M_SSTE1 EQU 15 ; SSI Transmit #1 Enable
M_SSTE0 EQU 16 ; SSI Transmit #0 Enable
M_SSRE EQU 17  ; SSI Receive Enable
M_SSTIE EQU 18 ; SSI Transmit Interrupt Enable
M_SSRIE EQU 19 ; SSI Receive Interrupt Enable
M_STLIE EQU 20 ; SSI Transmit Last Slot Interrupt Enable
M_SRLIE EQU 21 ; SSI Receive Last Slot Interrupt Enable
M_STEIE EQU 22 ; SSI Transmit Error Interrupt Enable
M_SREIE EQU 23 ; SSI Receive Error Interrupt Enable


;       SSI Status Register Bit Flags

M_IF EQU $3     ; Serial Input Flag Mask
M_IF0 EQU 0      ; Serial Input Flag 0
M_IF1 EQU 1      ; Serial Input Flag 1
M_TFS EQU 2      ; Transmit Frame Sync Flag
M_RFS EQU 3      ; Receive Frame Sync Flag
M_TUE EQU 4      ; Transmitter Underrun Error FLag
M_ROE EQU 5      ; Receiver Overrun Error Flag
M_TDE EQU 6      ; Transmit Data Register Empty
M_RDF EQU 7      ; Receive Data Register Full

;       SSI Transmit Slot Mask Register A

M_SSTSA EQU $FFFF  ; SSI Transmit Slot Bits Mask A (TS0-TS15)
```

Because of an order from the United States International Trade Commission, BGA-packaged product lines and part numbers indicated here currently are not available from Freescale for import or sale in the United States prior to September 2010: DSP56301

Downloaded from Elcodis.com electronic components distributor

```
;       SSI Transmit Slot Mask Register B

M_SSTSB EQU $FFFF  ; SSI Transmit Slot Bits Mask B (TS16-TS31)

;       SSI Receive Slot Mask Register A

M_SSRSA EQU $FFFF  ; SSI Receive Slot Bits Mask A (RS0-RS15)

;       SSI Receive Slot Mask Register B

M_SSRSB EQU $FFFF  ; SSI Receive Slot Bits Mask B (RS16-RS31)



;-----------------------------------------------------------------------
;
;       EQUATES for Exception Processing
;
;-----------------------------------------------------------------------


;       Register Addresses

M_IPRC EQU $FFFFFF; Interrupt Priority Register Core
M_IPRP EQU $FFFFFE; Interrupt Priority Register Peripheral

;       Interrupt Priority Register Core (IPRC)

M_IAL EQU $7     ; IRQA Mode Mask
M_IAL0 EQU 0      ; IRQA Mode Interrupt Priority Level (low)
M_IAL1 EQU 1      ; IRQA Mode Interrupt Priority Level (high)
M_IAL2 EQU 2      ; IRQA Mode Trigger Mode
M_IBL EQU $38    ; IRQB Mode Mask
M_IBL0 EQU 3      ; IRQB Mode Interrupt Priority Level (low)
M_IBL1 EQU 4      ; IRQB Mode Interrupt Priority Level (high)
M_IBL2 EQU 5      ; IRQB Mode Trigger Mode
M_ICL EQU $1C0   ; IRQC Mode Mask
M_ICL0 EQU 6      ; IRQC Mode Interrupt Priority Level (low)
M_ICL1 EQU 7      ; IRQC Mode Interrupt Priority Level (high)
M_ICL2 EQU 8      ; IRQC Mode Trigger Mode
M_IDL EQU $E00   ; IRQD Mode Mask
M_IDL0 EQU 9      ; IRQD Mode Interrupt Priority Level (low)
M_IDL1 EQU 10     ; IRQD Mode Interrupt Priority Level (high)
M_IDL2 EQU 11     ; IRQD Mode Trigger Mode
M_D0L EQU $3000  ; DMA0 Interrupt priority Level Mask
M_D0L0 EQU 12     ; DMA0 Interrupt Priority Level (low)
M_D0L1 EQU 13     ; DMA0 Interrupt Priority Level (high)
M_D1L EQU $C000  ; DMA1 Interrupt Priority Level Mask
M_D1L0 EQU 14     ; DMA1 Interrupt Priority Level (low)
M_D1L1 EQU 15     ; DMA1 Interrupt Priority Level (high)
M_D2L EQU $30000 ; DMA2 Interrupt priority Level Mask
M_D2L0 EQU 16     ; DMA2 Interrupt Priority Level (low)
M_D2L1 EQU 17     ; DMA2 Interrupt Priority Level (high)
M_D3L EQU $C0000 ; DMA3 Interrupt Priority Level Mask
M_D3L0 EQU 18     ; DMA3 Interrupt Priority Level (low)
M_D3L1 EQU 19     ; DMA3 Interrupt Priority Level (high)
M_D4L EQU $300000; DMA4 Interrupt priority Level Mask
M_D4L0 EQU 20     ; DMA4 Interrupt Priority Level (low)
M_D4L1 EQU 21     ; DMA4 Interrupt Priority Level (high)
```

Because of an order from the United States International Trade Commission, BGA-packaged product lines and part numbers indicated here currently are not available from Freescale for import or sale in the United States prior to September 2010: DSP56301

Downloaded from Elcodis.com electronic components distributor

```
M_D5L EQU $C00000; DMA5 Interrupt priority Level Mask
M_D5L0 EQU 22     ; DMA5 Interrupt Priority Level (low)
M_D5L1 EQU 23     ; DMA5 Interrupt Priority Level (high)


;       Interrupt Priority Register Peripheral (IPRP)

M_HPL EQU $3     ; Host Interrupt Priority Level Mask
M_HPL0 EQU 0      ; Host Interrupt Priority Level (low)
M_HPL1 EQU 1      ; Host Interrupt Priority Level (high)
M_S0L EQU $C     ; SSI0 Interrupt Priority Level Mask
M_S0L0 EQU 2      ; SSI0 Interrupt Priority Level (low)
M_S0L1 EQU 3      ; SSI0 Interrupt Priority Level (high)
M_S1L EQU $30    ; SSI1 Interrupt Priority Level Mask
M_S1L0 EQU 4      ; SSI1 Interrupt Priority Level (low)
M_S1L1 EQU 5      ; SSI1 Interrupt Priority Level (high)
M_SCL EQU $C0    ; SCI  Interrupt Priority Level  Mask
M_SCL0 EQU 6      ; SCI  Interrupt Priority Level  (low)
M_SCL1 EQU 7      ; SCI  Interrupt Priority Level  (high)
M_T0L EQU $300   ; TIMER Interrupt Priority Level Mask
M_T0L0 EQU 8      ; TIMER Interrupt Priority Level (low)
M_T0L1 EQU 9      ; TIMER Interrupt Priority Level (high)


;-------------------------------------------------------------------------
;
;       EQUATES for TIMER
;
;-------------------------------------------------------------------------

;       Register Addresses Of TIMER0

M_TCSR0 EQU $FFFF8F; TIMER0 Control/Status Register
M_TLR0 EQU $FFFF8E; TIMER0 Load Reg
M_TCPR0 EQU $FFFF8D; TIMER0 Compare Register
M_TCR0 EQU $FFFF8C ; TIMER0 Count Register

;       Register Addresses Of TIMER1

M_TCSR1 EQU $FFFF8B; TIMER1 Control/Status Register
M_TLR1 EQU $FFFF8A; TIMER1 Load Reg
M_TCPR1 EQU $FFFF89; TIMER1 Compare Register
M_TCR1 EQU $FFFF88; TIMER1 Count Register


;       Register Addresses Of TIMER2

M_TCSR2 EQU $FFFF87; TIMER2 Control/Status Register
M_TLR2 EQU $FFFF8; TIMER2 Load Reg
M_TCPR2 EQU $FFFF85; TIMER2 Compare Register
M_TCR2 EQU $FFFF84 ; TIMER2 Count Register
M_TPLR EQU $FFFF83 ; TIMER Prescaler Load Register
M_TPCR EQU $FFFF82 ; TIMER Prescalar Count Register


;       Timer Control/Status Register Bit Flags

M_TE EQU 0      ; Timer Enable
M_TOIE EQU 1      ; Timer Overflow Interrupt Enable
M_TCIE EQU 2      ; Timer Compare Interrupt Enable
```

Because of an order from the United States International Trade Commission, BGA-packaged product lines and part numbers indicated here currently are not available from Freescale for import or sale in the United States prior to September 2010: DSP56301

Downloaded from Elcodis.com electronic components distributor

```
M_TC EQU $F0    ; Timer Control Mask (TC0-TC3)
M_INV EQU 8      ; Inverter Bit
M_TRM EQU 9      ; Timer Restart Mode
M_DIR EQU 11     ; Direction Bit
M_DI EQU 12     ; Data Input
M_DO EQU 13     ; Data Output
M_PCE EQU 15   ; Prescaled Clock Enable
M_TOF EQU 20     ; Timer Overflow Flag
M_TCF EQU 21     ; Timer Compare Flag

;       Timer Prescaler Register Bit Flags

M_PS EQU $600000  ; Prescaler Source Mask
M_PS0 EQU 21
M_PS1 EQU 22

;      Timer Control Bits
M_TC0 EQU 4      ; Timer Control 0
M_TC1 EQU 5      ; Timer Control 1
M_TC2 EQU 6      ; Timer Control 2
M_TC3 EQU 7      ; Timer Control 3


;-------------------------------------------------------------------------
;
;       EQUATES for Direct Memory Access (DMA)
;
;-------------------------------------------------------------------------

;       Register Addresses Of DMA
M_DSTR EQU $FFFFF4; DMA Status Register
M_DOR0 EQU $FFFFF3; DMA Offset Register 0
M_DOR1 EQU $FFFFF2; DMA Offset Register 1
M_DOR2 EQU $FFFFF1; DMA Offset Register 2
M_DOR3 EQU $FFFFF0; DMA Offset Register 3


;       Register Addresses Of DMA0

M_DSR0 EQU $FFFFEF; DMA0 Source Address Register
M_DDR0 EQU $FFFFEE; DMA0 Destination Address Register
M_DCO0 EQU $FFFFED; DMA0 Counter
M_DCR0 EQU $FFFFEC; DMA0 Control Register

;       Register Addresses Of DMA1

M_DSR1 EQU $FFFFEB; DMA1 Source Address Register
M_DDR1 EQU $FFFFEA; DMA1 Destination Address Register
M_DCO1 EQU $FFFFE9; DMA1 Counter
M_DCR1 EQU $FFFFE8; DMA1 Control Register

;       Register Addresses Of DMA2

M_DSR2 EQU $FFFFE7; DMA2 Source Address Register
M_DDR2 EQU $FFFFE6; DMA2 Destination Address Register
M_DCO2 EQU $FFFFE5; DMA2 Counter
M_DCR2 EQU $FFFFE4; DMA2 Control Register

;       Register Addresses Of DMA4
```

Because of an order from the United States International Trade Commission, BGA-packaged product lines and part numbers indicated here currently are not available from Freescale for import or sale in the United States prior to September 2010: DSP56301

Downloaded from Elcodis.com electronic components distributor

```
M_DSR3 EQU $FFFFE3; DMA3 Source Address Register
M_DDR3 EQU $FFFFE2; DMA3 Destination Address Register
M_DCO3 EQU $FFFFE1; DMA3 Counter
M_DCR3 EQU $FFFFE0; DMA3 Control Register

;       Register Addresses Of DMA4


M_DSR4 EQU $FFFFDF; DMA4 Source Address Register
M_DDR4 EQU $FFFFDE; DMA4 Destination Address Register
M_DCO4 EQU $FFFFDD; DMA4 Counter
M_DCR4 EQU $FFFFDC; DMA4 Control Register

;       Register Addresses Of DMA5

M_DSR5 EQU $FFFFDB; DMA5 Source Address Register
M_DDR5 EQU $FFFFDA; DMA5 Destination Address Register
M_DCO5 EQU $FFFFD9; DMA5 Counter
M_DCR5 EQU $FFFFD8; DMA5 Control Register

;      DMA Control Register

M_DSS EQU $3   ; DMA Source Space Mask (DSS0-Dss1)
M_DSS0 EQU 0   ; DMA Source Memory space 0
M_DSS1 EQU 1   ; DMA Source Memory space 1
M_DDS EQU $C   ; DMA Destination Space Mask (DDS-DDS1)
M_DDS0 EQU 2   ; DMA Destination Memory Space 0
M_DDS1 EQU 3   ; DMA Destination Memory Space 1
M_DAM EQU $3F0 ; DMA Address Mode Mask (DAM5-DAM0)
M_DAM0 EQU 4   ; DMA Address Mode 0
M_DAM1 EQU 5   ; DMA Address Mode 1
M_DAM2 EQU 6   ; DMA Address Mode 2
M_DAM3 EQU 7   ; DMA Address Mode 3
M_DAM4 EQU 8   ; DMA Address Mode 4
M_DAM5 EQU 9   ; DMA Address Mode 5
M_D3D EQU 10   ; DMA Three Dimensional Mode
M_DRS EQU $F800; DMA Request Source Mask (DRS0-DRS4)
M_DCON EQU 16  ; DMA Continuous Mode
M_DPR EQU $60000; DMA Channel Priority
M_DPR0 EQU 17  ; DMA Channel Priority Level (low)
M_DPR1 EQU 18  ; DMA Channel Priority Level (high)
M_DTM EQU $380000; DMA Transfer Mode Mask (DTM2-DTM0)
M_DTM0 EQU 19  ; DMA Transfer Mode 0
M_DTM1 EQU 20  ; DMA Transfer Mode 1
M_DTM2 EQU 21  ; DMA Transfer Mode 2
M_DIE EQU 22   ; DMA Interrupt Enable bit
M_DE EQU 23    ; DMA Channel Enable bit

;       DMA Status Register

M_DTD EQU $3F  ; Channel Transfer Done Status MASK (DTD0-DTD5)
M_DTD0 EQU 0      ; DMA Channel Transfer Done Status 0
M_DTD1 EQU 1      ; DMA Channel Transfer Done Status 1
M_DTD2 EQU 2      ; DMA Channel Transfer Done Status 2
M_DTD3 EQU 3      ; DMA Channel Transfer Done Status 3
M_DTD4 EQU 4      ; DMA Channel Transfer Done Status 4
M_DTD5 EQU 5      ; DMA Channel Transfer Done Status 5
M_DACT EQU 8   ; DMA Active State
M_DCH EQU $E00 ; DMA Active Channel Mask (DCH0-DCH2)
M_DCH0 EQU 9   ; DMA Active Channel 0
```

Because of an order from the United States International Trade Commission, BGA-packaged product lines and part numbers indicated here currently are not available from Freescale for import or sale in the United States prior to September 2010: DSP56301

Downloaded from Elcodis.com electronic components distributor

```
M_DCH1 EQU 10  ; DMA Active Channel 1
M_DCH2 EQU 11  ; DMA Active Channel 2


;-----------------------------------------------------------------------
;
;       EQUATES for Phase Lock Loop (PLL)
;
;-----------------------------------------------------------------------

;       Register Addresses Of PLL

M_PCTL EQU $FFFFFD; PLL Control Register

;       PLL Control Register

M_MF EQU $FFF   ; Multiplication Factor Bits Mask (MF0-MF11)
M_DF EQU $7000  ; Division Factor Bits Mask (DF0-DF2)
M_XTLR EQU 15     ; XTAL Range select bit
M_XTLD EQU 16     ; XTAL Disable Bit
M_PSTP EQU 17     ; STOP Processing State Bit
M_PEN EQU 18     ; PLL Enable Bit
M_PCOD EQU 19     ; PLL Clock Output Disable Bit
M_PD EQU $F00000; PreDivider Factor Bits Mask (PD0-PD3)


;-----------------------------------------------------------------------
;
;       EQUATES for BIU
;
;-----------------------------------------------------------------------

;       Register Addresses Of BIU


M_BCR EQU $FFFFFB; Bus Control Register
M_DCR EQU $FFFFFA; DRAM Control Register
M_AAR0 EQU $FFFFF9; Address Attribute Register 0
M_AAR1 EQU $FFFFF8; Address Attribute Register 1
M_AAR2 EQU $FFFFF7; Address Attribute Register 2
M_AAR3 EQU $FFFFF6; Address Attribute Register 3
M_IDR EQU $FFFFF5; ID Register

;       Bus Control Register

M_BA0W EQU $1F    ; Area 0 Wait Control Mask (BA0W0-BA0W4)
M_BA1W EQU $3E0   ; Area 1 Wait Control Mask (BA1W0-BA14)
M_BA2W EQU $1C00  ; Area 2 Wait Control Mask (BA2W0-BA2W2)
M_BA3W EQU $E000  ; Area 3 Wait Control Mask (BA3W0-BA3W3)
M_BDFW EQU $1F0000; Default Area Wait Control Mask (BDFW0-BDFW4)
M_BBS EQU 21     ; Bus State
M_BLH EQU 22     ; Bus Lock Hold
M_BRH EQU 23     ; Bus Request Hold

;       DRAM Control Register

M_BCW EQU $3     ; In Page Wait States Bits Mask (BCW0-BCW1)
M_BRW EQU $C     ; Out Of Page Wait States Bits Mask (BRW0-BRW1)
M_BPS EQU $300   ; DRAM Page Size Bits Mask (BPS0-BPS1)
M_BPLE EQU 11     ; Page Logic Enable
```

Because of an order from the United States International Trade Commission, BGA-packaged product lines and part numbers indicated here currently are not available from Freescale for import or sale in the United States prior to September 2010: DSP56301

Downloaded from Elcodis.com electronic components distributor

```
M_BME EQU 12     ; Mastership Enable
M_BRE EQU 13     ; Refresh Enable
M_BSTR EQU 14     ; Software Triggered Refresh
M_BRF EQU $7F8000; Refresh Rate Bits Mask (BRF0-BRF7)
M_BRP EQU 23     ; Refresh prescaler

;       Address Attribute Registers

M_BAT EQU $3     ; External Access Type and Pin Definition Bits Mask (BAT0-BAT1)
M_BAAP EQU 2      ; Address Attribute Pin Polarity
M_BPEN EQU 3      ; Program Space Enable
M_BXEN EQU 4      ; X Data Space Enable
M_BYEN EQU 5      ; Y Data Space Enable
M_BAM EQU 6      ; Address Muxing
M_BPAC EQU 7   ; Packing Enable
M_BNC EQU $F00   ; Number of Address Bits to Compare Mask (BNC0-BNC3)
M_BAC EQU $FFF000; Address to Compare Bits Mask (BAC0-BAC11)

;       control and status bits in SR

M_CP EQU $c00000 ; mask for CORE-DMA priority bits in SR
M_CA EQU 0       ; Carry
M_V EQU 1       ; Overflow
M_Z EQU 2       ; Zero
M_N EQU 3       ; Negative
M_U EQU 4       ; Unnormalized
M_E EQU 5       ; Extension
M_L EQU 6       ; Limit
M_S EQU 7       ; Scaling Bit
M_I0 EQU 8       ; Interupt Mask Bit 0
M_I1 EQU 9       ; Interupt Mask Bit 1
M_S0 EQU 10      ; Scaling Mode Bit 0
M_S1 EQU 11      ; Scaling Mode Bit 1
M_SC EQU 13      ; Sixteen_Bit Compatibility
M_DM EQU 14      ; Double Precision Multiply
M_LF EQU 15      ; DO-Loop Flag
M_FV EQU 16      ; DO-Forever Flag
M_SA EQU 17      ; Sixteen-Bit Arithmetic
M_CE EQU 19      ; Instruction Cache Enable
M_SM EQU 20      ; Arithmetic Saturation
M_RM EQU 21      ; Rounding Mode
M_CP0 EQU22      ; bit 0 of priority bits in SR
M_CP1 EQU 23      ; bit 1 of priority bits in SR

;       control and status bits in OMR
M_CDP EQU$300  ; mask for CORE-DMA priority bits in OMR
M_MA EQU 0       ; Operating Mode A
M_MB EQU 1       ; Operating Mode B
M_MC EQU 2       ; Operating Mode C
M_MD EQU 3       ; Operating Mode D
M_EBD EQU 4       ; External Bus Disable bit in OMR
M_SD EQU 6       ; Stop Delay
M_CDP0 EQU 8       ; bit 0 of priority bits in OMR
M_CDP1 EQU 9       ; bit 1 of priority bits in OMR
M_BEN EQU 10      ; Burst Enable
M_TAS EQU 11      ; TA Synchronize Select
M_BRT EQU 12      ; Bus Release Timing
M_XYS EQU 16      ; Stack Extension space select bit in OMR.
M_EUN EQU 17      ; Extensed stack UNderflow flag in OMR.
M_EOV EQU 18      ; Extended stack OVerflow flag in OMR.
```

Because of an order from the United States International Trade Commission, BGA-packaged product lines and part numbers indicated here currently are not available from Freescale for import or sale in the United States prior to September 2010: DSP56301

Downloaded from Elcodis.com electronic components distributor

```
        M_WRP EQU 19      ; Extended WRaP flag in OMR.
        M_SEN EQU 20      ; Stack Extension Enable bit in OMR.
        ;*************************************************************************
        ;
        ;     EQUATES for DSP56301 interrupts
        ;     Reference: DSP56301 Specifications Revision 3.00
        ;
        ;     Last update: November 15 1993 (Debug request & HI32 interrupts)
        ;                  December 19 1993 (cosmetic - page and opt directives)
        ;              August 16 1994 (change interrupt addresses to be
;                            relative to I_VEC)
        ;
        ;*************************************************************************

               page   132,55,0,0,0
               opt    mex

        intequ  ident   1,0

               if     @DEF(I_VEC)
               ;leave user definition as is.
               else
        I_VEC  equ    $0
               endif

        ;-------------------------------------------------------------------------
        ; Non-Maskable interrupts
        ;-------------------------------------------------------------------------
        I_RESET  EQU  I_VEC+$00   ; Hardware RESET
        I_STACK  EQU  I_VEC+$02   ; Stack Error
        I_ILL    EQU  I_VEC+$04   ; Illegal Instruction
        I_DBG    EQU  I_VEC+$06   ; Debug Request
        I_TRAP   EQU  I_VEC+$08   ; Trap
        I_NMI    EQU  I_VEC+$0A   ; Non Maskable Interrupt

        ;-------------------------------------------------------------------------
        ; Interrupt Request Pins
        ;-------------------------------------------------------------------------
        I_IRQA   EQU  I_VEC+$10   ; IRQA
        I_IRQB   EQU  I_VEC+$12   ; IRQB
        I_IRQC   EQU  I_VEC+$14   ; IRQC
        I_IRQD   EQU  I_VEC+$16   ; IRQD

        ;-------------------------------------------------------------------------
        ; DMA Interrupts
        ;-------------------------------------------------------------------------
        I_DMA0   EQU  I_VEC+$18   ; DMA Channel 0
        I_DMA1   EQU  I_VEC+$1A   ; DMA Channel 1
        I_DMA2   EQU  I_VEC+$1C   ; DMA Channel 2
        I_DMA3   EQU  I_VEC+$1E   ; DMA Channel 3
        I_DMA4   EQU  I_VEC+$20   ; DMA Channel 4
        I_DMA5   EQU  I_VEC+$22   ; DMA Channel 5



        ;-------------------------------------------------------------------------
        ; Timer Interrupts
        ;-------------------------------------------------------------------------
        I_TIM0C  EQU  I_VEC+$24   ; TIMER 0 compare
        I_TIM0OF EQU  I_VEC+$26   ; TIMER 0 overflow
```

Because of an order from the United States International Trade Commission, BGA-packaged product lines and part numbers indicated here currently are not available from Freescale for import or sale in the United States prior to September 2010: DSP56301

Downloaded from Elcodis.com electronic components distributor

```
I_TIM1C  EQU  I_VEC+$28   ; TIMER 1 compare
I_TIM1OF EQU  I_VEC+$2A   ; TIMER 1 overflow
I_TIM2C  EQU  I_VEC+$2C   ; TIMER 2 compare
I_TIM2OF EQU  I_VEC+$2E   ; TIMER 2 overflow

;-------------------------------------------------------------------------
; ESSI Interrupts
;-------------------------------------------------------------------------
I_SI0RD  EQU  I_VEC+$30   ; ESSI0 Receive Data
I_SI0RDE EQU  I_VEC+$32   ; ESSI0 Receive Data With Exception Status
I_SI0RLS EQU  I_VEC+$34   ; ESSI0 Receive last slot
I_SI0TD  EQU  I_VEC+$36   ; ESSI0 Transmit data
I_SI0TDE EQU  I_VEC+$38   ; ESSI0 Transmit Data With Exception Status
I_SI0TLS EQU  I_VEC+$3A   ; ESSI0 Transmit last slot
I_SI1RD  EQU  I_VEC+$40   ; ESSI1 Receive Data
I_SI1RDE EQU  I_VEC+$42   ; ESSI1 Receive Data With Exception Status
I_SI1RLS EQU  I_VEC+$44   ; ESSI1 Receive last slot
I_SI1TD  EQU  I_VEC+$46   ; ESSI1 Transmit data
I_SI1TDE EQU  I_VEC+$48   ; ESSI1 Transmit Data With Exception Status
I_SI1TLS EQU  I_VEC+$4A   ; ESSI1 Transmit last slot

;-------------------------------------------------------------------------
; SCI Interrupts
;-------------------------------------------------------------------------
I_SCIRD  EQU  I_VEC+$50   ; SCI Receive Data
I_SCIRDE EQU  I_VEC+$52   ; SCI Receive Data With Exception Status
I_SCITD  EQU  I_VEC+$54   ; SCI Transmit Data
I_SCIIL  EQU  I_VEC+$56   ; SCI Idle Line
I_SCITM  EQU  I_VEC+$58   ; SCI Timer

;-------------------------------------------------------------------------
; HOST Interrupts
;-------------------------------------------------------------------------
I_HPTT   EQU  I_VEC+$60   ; Host PCI Transaction Termination
I_HPTA   EQU  I_VEC+$62   ; Host PCI Transaction Abort
I_HPPE   EQU  I_VEC+$64   ; Host PCI Parity Error
I_HPTC   EQU  I_VEC+$66   ; Host PCI Transfer Complete
I_HPMR   EQU  I_VEC+$68   ; Host PCI Master Receive
I_HSR    EQU  I_VEC+$6A   ; Host Slave Receive
I_HPMT   EQU  I_VEC+$6C   ; Host PCI Master Transmit
I_HST    EQU  I_VEC+$6E   ; Host Slave Transmit
I_HPMA   EQU  I_VEC+$70   ; Host PCI Master Address
I_HCNMI  EQU  I_VEC+$72   ; Host Command/Host NMI (Default)

;-------------------------------------------------------------------------
; INTERRUPT ENDING ADDRESS
;-------------------------------------------------------------------------
I_INTEND EQU  I_VEC+$FF   ; last address of interrupt vector space
```

Because of an order from the United States International Trade Commission, BGA-packaged product lines and part numbers indicated here currently are not available from Freescale for import or sale in the United States prior to September 2010: DSP56301

Downloaded from Elcodis.com electronic components distributor

Ordering Information

Consult a Freescale Semiconductor sales office or authorized distributor to determine product availability and place an order.

Part	Supply Voltage	Package Type	Pin Count	Core Frequency (MHz)	Solder Spheres	Order Number
DSP56301	3.3 V	Thin Quad Flat Pack (TQFP)	208	80	Lead-free	DSP56301AG80
					Lead-bearing	DSP56301PW80
				100	Lead-free	DSP56301AG100
					Lead-bearing	DSP56301PW100
		Molded Array Process-Ball Grid Array (MAP-BGA)	252	80	Lead-free	DSP56301VL80
					Lead-bearing	DSP56301VF80
				100	Lead-free	DSP56301VL100
					Lead-bearing	DSP56301VF100

How to Reach Us:

Home Page:
www.freescale.com

E-mail:
support@freescale.com

USA/Europe or Locations not listed:
Freescale Semiconductor
Technical Information Center, CH370
1300 N. Alma School Road
Chandler, Arizona 85224
+1-800-521-6274 or +1-480-768-2130
support@freescale.com

Europe, Middle East, and Africa:
Freescale Halbleiter Deutschland GMBH
Technical Information Center
Schatzbogen 7
81829 München, Germany
+44 1296 380 456 (English)
+46 8 52200080 (English)
+49 89 92103 559 (German)
+33 1 69 35 48 48 (French)
support@freescale.com

Japan:
Freescale Semiconductor Japan Ltd.
Headquarters
ARCO Tower 15F
1-8-1, Shimo-Meguro, Meguro-ku,
Tokyo 153-0064, Japan
0120 191014 or +81 3 5437 9125
support.japan@freescale.com

Asia/Pacific:
Freescale Semiconductor Hong Kong Ltd.
Technical Information Center
2 Dai King Street
Tai Po Industrial Estate
Tai Po, N.T. Hong Kong
+800 2666 8080
support.asia@freescale.com

For Literature Requests Only:
Freescale Semiconductor Literature Distribution Center
P.O. Box 5405
Denver, Colorado 80217
1-800-441-2447 or 303-675-2140
Fax: 303-675-2150
LDCForFreescaleSemiconductor@hibbertgroup.com

Information in this document is provided solely to enable system and software implementers to use Freescale Semiconductor products. There are no express or implied copyright licenses granted hereunder to design or fabricate any integrated circuits or integrated circuits based on the information in this document.

Freescale Semiconductor reserves the right to make changes without further notice to any products herein. Freescale Semiconductor makes no warranty, representation or guarantee regarding the suitability of its products for any particular purpose, nor does Freescale Semiconductor assume any liability arising out of the application or use of any product or circuit, and specifically disclaims any and all liability, including without limitation consequential or incidental damages. “Typical” parameters which may be provided in Freescale Semiconductor data sheets and/or specifications can and do vary in different applications and actual performance may vary over time. All operating parameters, including “Typicals” must be validated for each customer application by customer’s technical experts. Freescale Semiconductor does not convey any license under its patent rights nor the rights of others. Freescale Semiconductor products are not designed, intended, or authorized for use as components in systems intended for surgical implant into the body, or other applications intended to support or sustain life, or for any other application in which the failure of the Freescale Semiconductor product could create a situation where personal injury or death may occur. Should Buyer purchase or use Freescale Semiconductor products for any such unintended or unauthorized application, Buyer shall indemnify and hold Freescale Semiconductor and its officers, employees, subsidiaries, affiliates, and distributors harmless against all claims, costs, damages, and expenses, and reasonable attorney fees arising out of, directly or indirectly, any claim of personal injury or death associated with such unintended or unauthorized use, even if such claim alleges that Freescale Semiconductor was negligent regarding the design or manufacture of the part.

Freescale™ and the Freescale logo are trademarks of Freescale Semiconductor, Inc. All other product or service names are the property of their respective owners.

© Freescale Semiconductor, Inc. 1996, 2006.

Document Order No.: DSP56301
Rev. 10
7/2006

Because of an order from the United States International Trade Commission, BGA-packaged product lines and part numbers indicated here currently are not available from Freescale for import or sale in the United States prior to September 2010: DSP56301

Downloaded from Elcodis.com electronic components distributor