Data Sheet

# DW-902

August, 2003

# Polarization Beam Combiner

# Product type: DW-902

## Applications

High power laser diode multiplexing application for pumping source of EDFA and Raman amplifier in WDM network.

## Description

- DW902 is three-port polarization beam combiner with optical crystal.
- Also could be used as Polarization splitter.

## Features

- Extremely low insertion loss. : 0.25dB Typical
- Flat insertion loss spectrum.
- High reliability using YAG laser welding and Epoxy-free optical path.
- Telcordia GR-1209, GR-1221 Qualified.

## Environmental conditions

| Parameter | Unit | Min | Typ | Max | Remarks |
|---|---|---|---|---|---|
| Storage Temperature | °C | -40 | - | 85 | No dew condensation |
| Operating Temperature | °C | 0 | - | 70 | No dew condensation |
| Maximum Optical Power *1) | mW | --- | --- | 1000 | 3W, 70°C, 90%RH × 1000hour test passed |

Note *1) Connector type is not available.

## Optical Characteristics

| Item | Symbol | Conditions | Min | Typ | Max | Unit |
|---|---|---|---|---|---|---|
| Operating Wavelength | λ | Type Number: DW902-V2- | 1420 | - | 1460 | nm |
| | | Type Number: DW902-V1- | 1460 | - | 1500 | nm |
| | | Type Number: DW902-V3- | 1530 | - | 1570 | nm |
| Insertion Loss | IL | at Operating Temperature | | 0.25 | 0.50 | dB |
| Return Loss | RL | | 50 | - | - | dB |

## Block diagram

## Outline Drawings

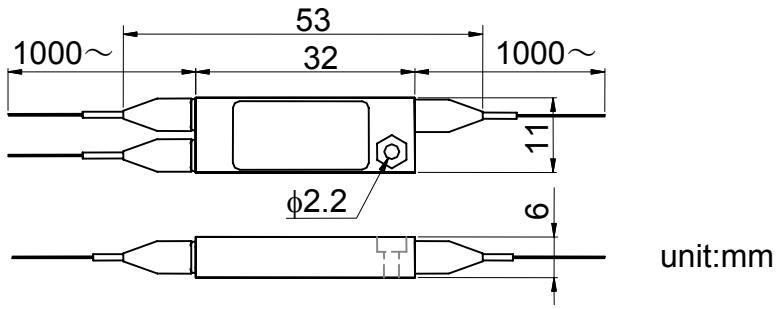


**[Fiber specs.]**

| | | |
|---|---|---|
| INPUT | Furukawa ϕ0.4mm coating PM-fiber | Equivalent to SM.15-P-8/125-UV/UV-400 |
| OUTPUT | ϕ0.25mm coating SM-fiber | ITU-T G.652 |

## Ordering Information

DW902- V□ - □ - □ □ / □ □

| Wavelength Range | |
|---|---|
| Symbol | |
| 1 | 1460 – 1500 |
| 2 | 1420 – 1460 |
| 3 | 1530 – 1570 |

| Extinction Ratio (Port 1 & 2) *1) | |
|---|---|
| Symbol | |
| 17 | 17 dB |
| 26 | 26 dB |

| Connector Type *2) (Port 1&2) | |
|---|---|
| Symbol | |
| FC | FC |
| SC | SC |
| N | N |

| Polishing Type (Port 1&2) | |
|---|---|
| Symbol | |
| S | SPC |
| A | APC |

| Connector Type (Port 3) | |
|---|---|
| Symbol | |
| FC | FC |
| SC | SC |
| N | N |

| Polishing Type (Port 3) | |
|---|---|
| Symbol | |
| S | SPC |
| A | APC |

Note *1) Connectorization is not Available with 26dB option
Note *2) Polarization axis : The stress producing members are perpendicular to the key.

Furukawa Electric reserves the right to improve, enhance and modify the features and specifications of FITEL products without prior notifications.

**Japan**
**Head Office**
2-2-3, Marunouchi
Chiyoda-ku
Tokyo 100-8322, JAPAN
Tel: +81-3-3286-3133
Fax: +81-3-3286-3708
http://www.furukawa.co.jp
Email:comsales@ho.furukawa.co.jp

**North America**
**Furukawa America Inc.**
200 Westpark Drive, Suite 190
Peachtree City, GA 30269
Tel: 770-487-1234
Toll-Free: 1-866-GO-FITEL(463-4835)
Fax: 770-487-9910
http://www.furukawaamerica.com
oesales@FurukawaAmerica.com

**Europe**
**Furukawa Electric Europe Ltd.**
3rd Floor, Newcombe House
43-45 Notting Hill Gate
London W11 3FE, UK
Tel: +44-20-7221-6000
Fax: +44-20-7313-5310
http://www.furukawa-fitel.co.uk
E-mail:sales@furukawa-fitel.co.uk