D1RFRD006

REVISION RECORD				
REV	ECO	DESCRIPTION	DRFT	CHKD
1		ADD P/N	2006/07/06	

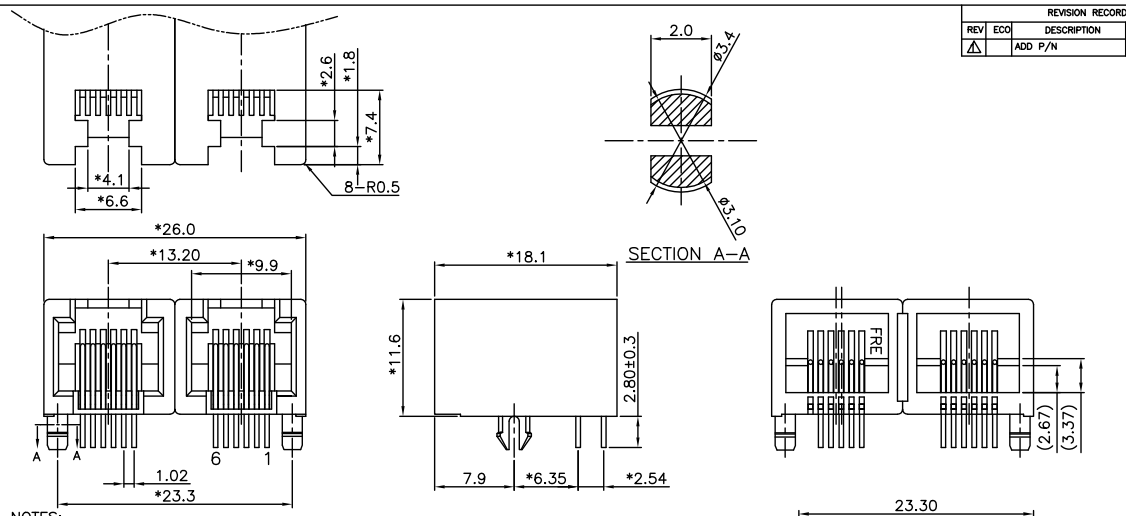

NOTES:

ELECTRICAL:

1. VOLTAGE RATING : 150 VAC RMS.
2. CURRENT RATING : 1.5 AMP.
3. CONTACT RESISTANCE : 60 MILLIOHMS MAX.
4. INSULATION RESISTANCE: 1000 MEGOHMS MIN @ 500 VDC.
5. DIELECTRIC STRENGTH : 1000 VAC RMS 60Hz, 1MIN.

MECHANICAL:

1. HOUSING MATERIAL : NYLON+25%.G.F OR PBT+15%G.F UL94V-0.
2. CONTACT MATERIAL : PHOSPHOR BRONZE ø0.46mm.
3. PLATING : GOLD PLATING OVER NICKEL.
4. OPERATING LIFE : 750 CYCLES MIN.
5. PCB RETENTION PRE-SOLDER : 1 LB MIN.
6. PCB RETENTION POST-SOLDER: 10 LBS MIN.

ENVIRONMENTAL:

1. STORAGE : -40°C TO +85°C.
2. OPERATION: -40°C TO +85°C.
3. WAVE SOLDERING TEMPERATURE: 230~250°C (3~5 SECONDS)

MATES WITH MODULAR PLUG CONFORMING TO FCC PART 68, SUBPART F.

PART NUMBER: E536X-305XXX-L

- NO. OF CONTACT: 2-2C, 4-4C, 6-6C
- 1- 3u" 2- 6u" 3-15u" 4-30u" 5-50u" 6-Pd 20u"
- 4F-FR50
- 0F-PBT+15%G.F

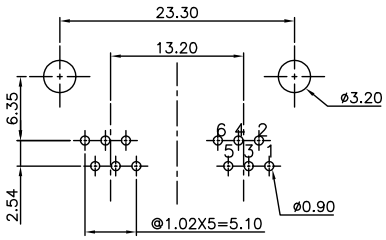

PC Board Layout Component Side Shown

MM (INCH) TOLERANCES EXCEPT AS NOTED	DFTO YAN	DATE 06/21/05'	FULL RISE ELECTRONIC CO., LTD
	CHKD	DATE	
	MFO	DATE	
MM .0 ±0.20 .00 ±0.15 .000 ±0.075	APPVL OSCAR	DATE 01/11/06	TITLE SIDE ENTRY DUAL PORTS 6P
ANGLES ±	MATERIAL :		
	QT'Y :		DRAWING NO. GE533075-LC / PART NO. SEE NOTE — SIZE A3 — REV 1
THIRD ANGLE PROJECTION	FINISH :		
	SCALE :		DO NOT SCALE DRAWING — SHEET X OF Y

DETACHED LISTS

Downloaded from Elcodis.com electronic components distributor