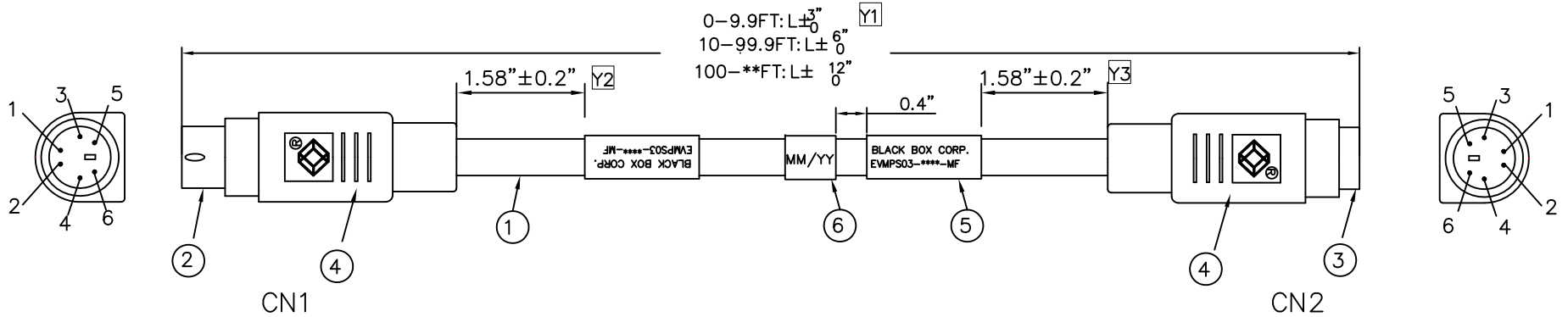

NOTE:

1. CABLE: 28AWG*6C+EA COLOR: (BEIGE) O.D: 0.177"
   MARKING: BLACK BOX CORPORATION GUARANTEED FOR LIFE(724)746–5500 ㄱ, AWM E223178 STYLE 2464 VW–1 80℃ 300V (ARIAL Unicode MS)
2. CONNECTOR: MD6PIN MALE
3. CONNECTOR: MD6PIN FEMALE
4. PVC COLOR: (BEIGE)
5. LABEL: BLACK BOX P/N LABEL
6. LABEL: YEAR/MONTH LABEL, WHITE GROUND WITH BLACK TEXT.

ELECTRONIC TEST:

A. OPEN/SHORT/INTERMITTENCE: 100%.
B. HI–POT: 300V DC/sec
C. INSULATION RESISTANCE: 20M ohm (MIN)
D. CONDUCTIVE RESISTANCE: 0<L≤10FT 2 ohm (MAX)
   10FT<L<15FT 3 ohm (MAX)
   15FT<L<30FT 4 ohm (MAX)
   30FT<L<100FT 6 ohm (MAX)
   L>100FT 10 ohm (MAX)
E. CPK Measure point Y1–Y3.

PIN OUT

CN1	COLOR	CN2
1	BLACK	1
2	BROWN	2
3	RED	3
4	ORANGE	4
5	YELLOW	5
6	GREEN	6
SHELL		SHELL

EVMPS03–0002–MF	24"+2.95"/–0mm	2FT
EVMPS03–0003–MF	36"+2.95"/–0mm	3FT
EVMPS03–0006–MF	72"+2.95"/–0mm	6FT
EVMPS03–0010–MF	120"+5.9"/–0mm	10FT
EVMPS03–0020–MF	250"+5.9"/–0mm	20FT
EVMPS03–0025–MF	300"+5.9"/–0mm	25FT
EVMPS03–0050–MF	600"+5.9"/–0mm	50FT

REV	ECN NO	DESCRIPTION	APPD.	DATE

BLACK BOX

Tolerance: X. ± .X ± .XX ± .XXX ± Angle: X° ± .X° ±	Approved by:	
	Checked by:	BLACK BOX P/N: EVMPS03–****–MF
	Drawn by: jun	Description: PS/2 KeyBoard Mouse Cable
	Date: 11.07.26	DWG. NO:
	Scale: Unit: inch	SHEET: 1 OF 1 REV: 00