THIS COPY IS PROVIDED ON A RESTRICTED BASIS AND IS NOT TO BE USED IN ANY WAY DETRIMENTAL TO THE INTERESTS OF PANDUIT CORP.

PANDUIT P/N	WEIGHT
FAP6WFC	1.984 LB/10 PCS. (900 G/10 PCS.)

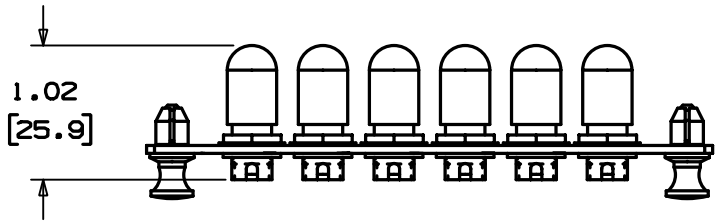

NOTES:
1. SEE CURRENT CATALOG FOR ADDITIONAL PART SUFFIXES TO INDICATE PACKAGE QUANTITY.
2. PRELOADED WITH SIX FC MULTIMODE/SINGLE MODE THREADED ADAPTERS WITH PHOSPHOR BRONZE SLEEVES.
3. DIMENSIONS IN PARENTHESIS ARE IN METRIC.
4. MATERIAL:

PANEL	ADAPTER HOUSING
CRS POWDER COATED	METAL

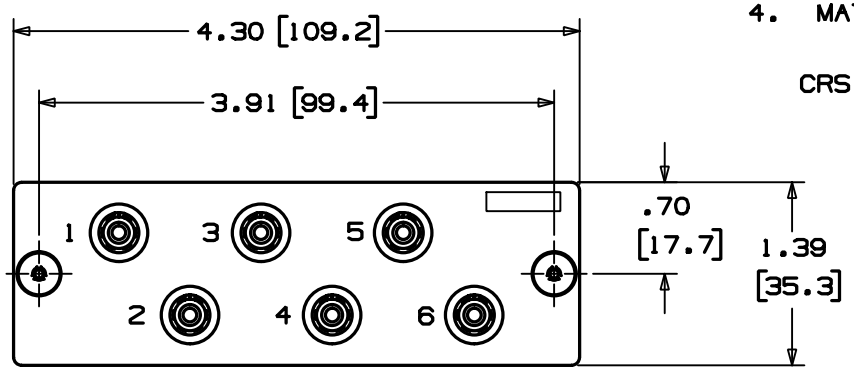

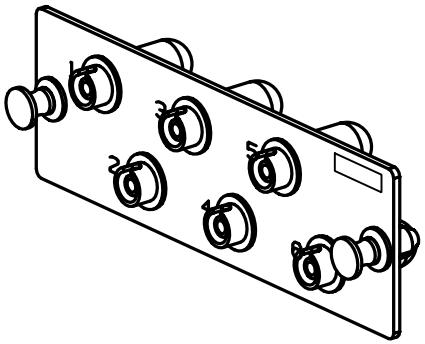

NOTE:
FRONT DUST COVERS REMOVED FOR CLARITY

REV	DATE	BY	CHK	DESCRIPTION	ECN - R	CUST	SUP
R	11-20-00	AFW		RELEASED TO PRODUCTION	00852-42		

CAD FILENAME/LAYERS: M00852AL_DC_00A.prt

PANDUIT CORP. TINLEY PARK, ILLINOIS

FIBER OPTIC SIX PORT PANEL
WITH FC CONNECTOR
CUSTOMER DRAWING

UNLESS OTHERWISE SPECIFIED, DIMENSIONAL TOLERANCES ARE:
(.X) ± (.XXX) ± .010(.3)
(.XX) ± .03(.8) ANGLES ±

UNLESS OTHERWISE SPECIFIED, ALL DIMENSIONS ARE GIVEN IN INCHES, THIRD ANGLE PROJECTION.

DRAWN BY: AFW
DATE: 11-20-00
CHK'D:
MAT'L: SEE NOTES
SCALE: 3:4
DRAWING NO.: 00852-42
DWG SIZE: A