THIS COPY IS PROVIDED ON A RESTRICTED BASIS AND IS NOT TO BE USED IN ANY WAY DETRIMENTAL TO THE INTERESTS OF PANDUIT CORP.

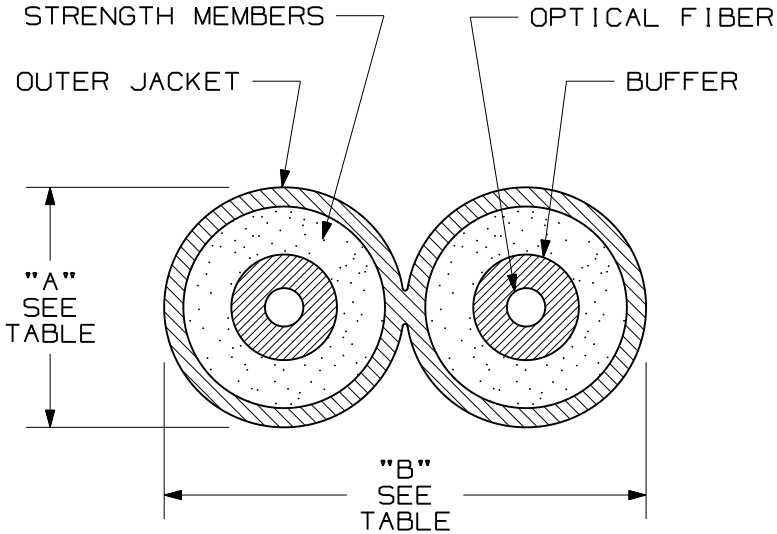

TYPE/DESCRIPTION	COLOR	MAXIMUM LOSS
MULTIMODE 62.5/125um DUPLEX ZIPCORD INTERCONNECT CABLE W/900um TIGHT BUFFER	ORANGE	3.5 dB/KM @ 850nm 1.5 dB/KM @ 1300nm

PLENUM - FSIP602Y			
TENSILE LOAD		BEND RADIUS	
INSTALLATION	LONG TERM	INSTALLATION	LONG TERM
220 N (50 lbf)	55 N (12.5 lbf)	58 mm (2.3 in)	29 mm (1.1 in)
CABLE DIMENSIONS	TEMPERATURE		
	INSTALLATION/OPERATION	STORAGE	
"A" = 2.9mm [.11"] "B" = 5.9mm [.23"]	0° C TO +50° C 32° F TO +122° F	-40° C TO +65° C -40° F TO +149° F	

RISER RATED - FSIR602Y			
TENSILE LOAD		BEND RADIUS	
INSTALLATION	LONG TERM	INSTALLATION	LONG TERM
220 N (50 lbf)	55 N (12.5 lbf)	58 mm (2.3 in)	29 mm (1.1 in)
CABLE DIMENSIONS	TEMPERATURE		
	INSTALLATION/OPERATION	STORAGE	
"A" = 2.9mm [.11"] "B" = 5.9mm [.23"]	-20° C TO +50° C -4° F TO +122° F	-40° C TO +65° C -40° F TO +149° F	

WEIGHT OF 2.5km REEL/BOX	
OFNP	OFNR
55.5 kg (122.3 lbs)	51.9 kg (114.4 lbs)

NOTES:
1. DIAMETER DIMENSION SHOWN FOR REFERENCE ONLY.
2. CABLE SUPPLIED IN 2500 METER (8202 FT) LENGTHS.
3. FOR PART NUMBERS AND LENGTHS OTHER THAN THOSE SHOWN, CONTACT YOUR PANDUIT SALES PERSON.
4. ALL MATERIALS AND COMPONENTS USED MUST MEET THE MATERIAL RESTRICTIONS OF RoHS, (EUROPEAN DIRECTIVE 2002/95/EC ON THE RESTRICTIONS OF HAZARDOUS SUBSTANCES) AS PROPOSED BY THE RoHS TECHNICAL ADAPTATION COMMITTEE.

REV	DATE	BY	CHK	DESCRIPTION	ECN - R	CUST	SUP	OTH
01	03-02-06	JH		RELEASED TO PRODUCTION	02055-18			

MULTIMODE 62.5/125um
OPTI-CORE DUPLEX ZIPCORD INTERCONNECT CABLE
W/900um TIGHT BUFFER
CUSTOMER DRAWING

PANDUIT™ CORP.
TINLEY PARK, ILL 60477

THIRD ANGLE PROJECTION

ALL DIMENSIONS ARE GIVEN IN INCHES, UNLESS OTHERWISE SPECIFIED.
DIMENSIONAL TOLERANCES ARE:
(.X) (.XXX)±.010 [0.3]
(.XX)±.03 [0.8] ANGLES

DRAWN BY: MC
DATE: 08-26-04
CHK'D:
REVIEW DRAWING NUMBERS

DRAWING FILENAME: M02055BC_DC_2Z-625_00B.prt
SCALE: NONE
PART NO.: FSIP602Y FSIR602Y
DRAWING NO.: 02055-18
SIZE: A