DIMENSIONS IN INCHES (MILLIMETERS)
DO NOT SCALE DRAWING .....

Dwg. No. GRS-4021-0035

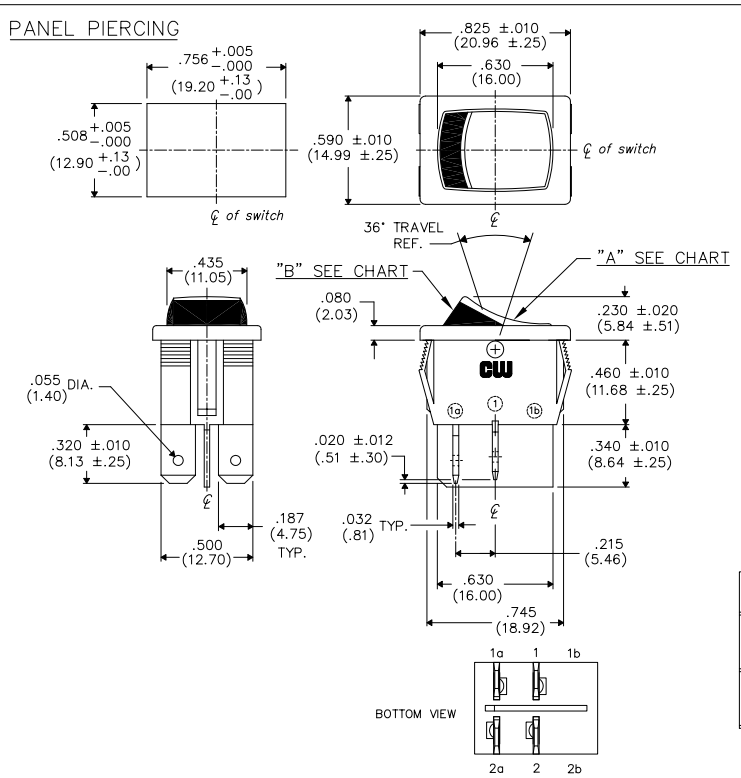

PART NUMBER	HOUSING COLOR	BUTTON COLOR "A"/"B"	CIRCUIT	RATING	UL & CSA
GRS-4021-0035	BLACK BK-000	BLACK BK-000/RED CNY-5447	DPST	16A 125-250VAC 3/4 H.P. 125-250VAC 3A 125V L 10A 14V T	APPROVED

B-FORMAT 2002

REVISIONS

0	RELEASED. DGW 8-29-2006 SEP. 01 2006

PDF FILE MADE

CW INDUSTRIES
Southampton, Pa. 18966

TOLERANCES UNLESS OTHERWISE SPECIFIED

	METRIC
2 Place Decimal ±.010	1 Place Dec. ±.25mm
3 Place Decimal ±.005	2 Place Dec. ±.13mm
Angles ..... ±1°	

Made for: CW IND.
Drawn by: DGW 8-29-2006
Checked by: G. GULD 9-1-06
Approval: GZISK

Title: 2 COLOR ROCKER SWIDGET ASSEMBLY DP/ST (POP IN)

Division: SWITCH

Dwg. No. GRS-4021-0035

Downloaded from Elcodis.com electronic components distributor