UIC Mall.com 友进芯城

HCF4001B

QUAD 2-INPUT NOR GATE

- PROPAGATION DELAY TIME:
  t_{PD} = 50ns (TYP.) at V_{DD} = 10V C_L = 50pF
- BUFFERED INPUTS AND OUTPUTS
- STANDARDIZED SYMMETRICAL OUTPUT CHARACTERISTICS
- QUIESCENT CURRENT SPECIFIED UP TO 20V
- 5V, 10V AND 15V PARAMETRIC RATINGS
- INPUT LEAKAGE CURRENT
  I_I = 100nA (MAX) AT V_{DD} = 18V T_A = 25°C
- 100% TESTED FOR QUIESCENT CURRENT

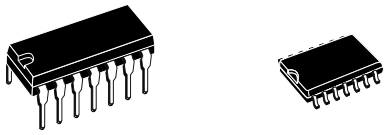

DIP SOP

ORDER CODES

PACKAGE	TUBE	T & R
DIP	HCF4001BEY	
SOP	HCF4001BM1	HCF4001M013TR

DESCRIPTION

The HCF4001B is a monolithic integrated circuit fabricated in Metal Oxide Semiconductor technology available in DIP and SOP packages.
The HCF4001B QUAD 2-INPUT NOR GATE provides the system designer with direct implementation of the NOR function and supplement the existing family of CMOS gates. All inputs and outputs are buffered.

PIN CONNECTION

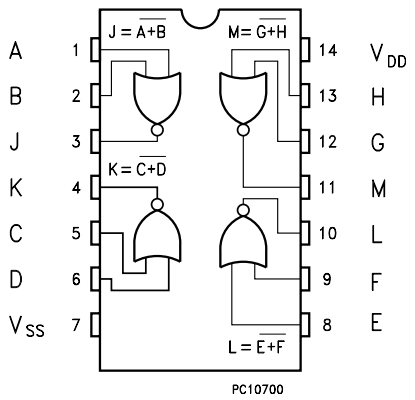

UICMall.com 友进芯城

INPUT EQUIVALENT CIRCUIT

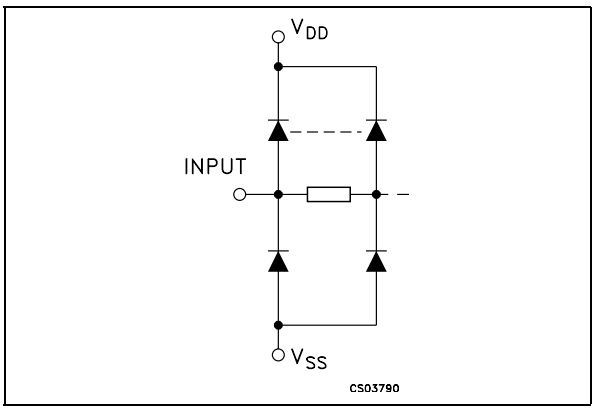

PIN DESCRIPTION

PIN N°	SYMBOL	NAME AND FUNCTION
1, 2, 5, 6, 8, 9, 12, 13	A, B, C, D, E, F, G, H	Data Inputs
3, 4, 10, 11	J, K, L, M	Data Outputs
7	V_{SS}	Negative Supply Voltage
14	V_{DD}	Positive Supply Voltage

TRUTH TABLE

INPUTS		OUTPUTS
A, C, E, G	B, D, F, H	J, K, L, M
L	L	H
L	H	L
H	L	L
H	H	L

LOGIC DIAGRAM

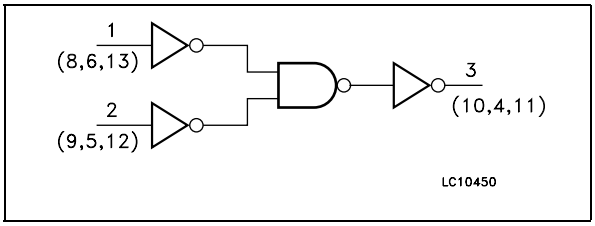

ABSOLUTE MAXIMUM RATINGS

Symbol	Parameter	Value	Unit
V_{DD}	Supply Voltage	-0.5 to +22	V
V_I	DC Input Voltage	-0.5 to V_{DD} + 0.5	V
I_I	DC Input Current	± 10	mA
P_D	Power Dissipation per Package	200	mW
	Power Dissipation per Output Transistor	100	mW
T_{op}	Operating Temperature	-55 to +125	°C
T_{stg}	Storage Temperature	-65 to +150	°C

Absolute Maximum Ratings are those values beyond which damage to the device may occur. Functional operation under these conditions is not implied.
All voltage values are referred to V_{SS} pin voltage.

RECOMMENDED OPERATING CONDITIONS

Symbol	Parameter	Value	Unit
V_{DD}	Supply Voltage	3 to 20	V
V_I	Input Voltage	0 to V_{DD}	V
T_{op}	Operating Temperature	-55 to 125	°C

UIC Mall.com 友进芯城

DC SPECIFICATIONS

Symbol	Parameter	Test Condition				Value							Unit
		V_I (V)	V_O (V)	$\|I_O\|$ (µA)	V_{DD} (V)	T_A = 25°C			-40 to 85°C		-55 to 125°C		
						Min.	Typ.	Max.	Min.	Max.	Min.	Max.	
I_L	Quiescent Current	0/5			5		0.01	0.25		7.5		7.5	µA
		0/10			10		0.01	0.5		15		15	
		0/15			15		0.01	1		30		30	
		0/20			20		0.02	5		150		150	
V_{OH}	High Level Output Voltage	0/5		<1	5	4.95			4.95		4.95		V
		0/10		<1	10	9.95			9.95		9.95		
		0/15		<1	15	14.95			14.95		14.95		
V_{OL}	Low Level Output Voltage	5/0		<1	5		0.05			0.05		0.05	V
		10/0		<1	10		0.05			0.05		0.05	
		15/0		<1	15		0.05			0.05		0.05	
V_{IH}	High Level Input Voltage		0.5/4.5	<1	5	3.5			3.5		3.5		V
			1/9	<1	10	7			7		7		
			1.5/13.5	<1	15	11			11		11		
V_{IL}	Low Level Input Voltage		4.5/0.5	<1	5			1.5		1.5		1.5	V
			9/1	<1	10			3		3		3	
			13.5/1.5	<1	15			4		4		4	
I_{OH}	Output Drive Current	0/5	2.5	<1	5	-1.36	-3.2		-1.15		-1.1		mA
		0/5	4.6	<1	5	-0.44	-1		-0.36		-0.36		
		0/10	9.5	<1	10	-1.1	-2.6		-0.9		-0.9		
		0/15	13.5	<1	15	-3.0	-6.8		-2.4		-2.4		
I_{OL}	Output Sink Current	0/5	0.4	<1	5	0.44	1		0.36		0.36		mA
		0/10	0.5	<1	10	1.1	2.6		0.9		0.9		
		0/15	1.5	<1	15	3.0	6.8		2.4		2.4		
I_I	Input Leakage Current	0/18	Any Input		18		$\pm10^{-5}$	±0.1		±1		±1	µA
C_I	Input Capacitance		Any Input				5	7.5					pF

The Noise Margin for both "1" and "0" level is: 1V min. with V_{DD}=5V, 2V min. with V_{DD}=10V, 2.5V min. with V_{DD}=15V

DYNAMIC ELECTRICAL CHARACTERISTICS (T_{amb} = 25°C, C_L = 50pF, R_L = 200KΩ, t_r = t_f = 20 ns)

Symbol	Parameter	Test Condition		Value (*)			Unit
		V_{DD} (V)		Min.	Typ.	Max.	
t_{TLH} t_{THL}	Output Transition Time	5			125	250	ns
		10			60	120	
		15			45	90	
t_{PLH} t_{PHL}	Propagation Delay Time	5			100	200	ns
		10			50	100	
		15			40	80	

(*) Typical temperature coefficient for all V_{DD} value is 0.3%/°C.

UICMall.com 友进芯城

TEST CIRCUIT

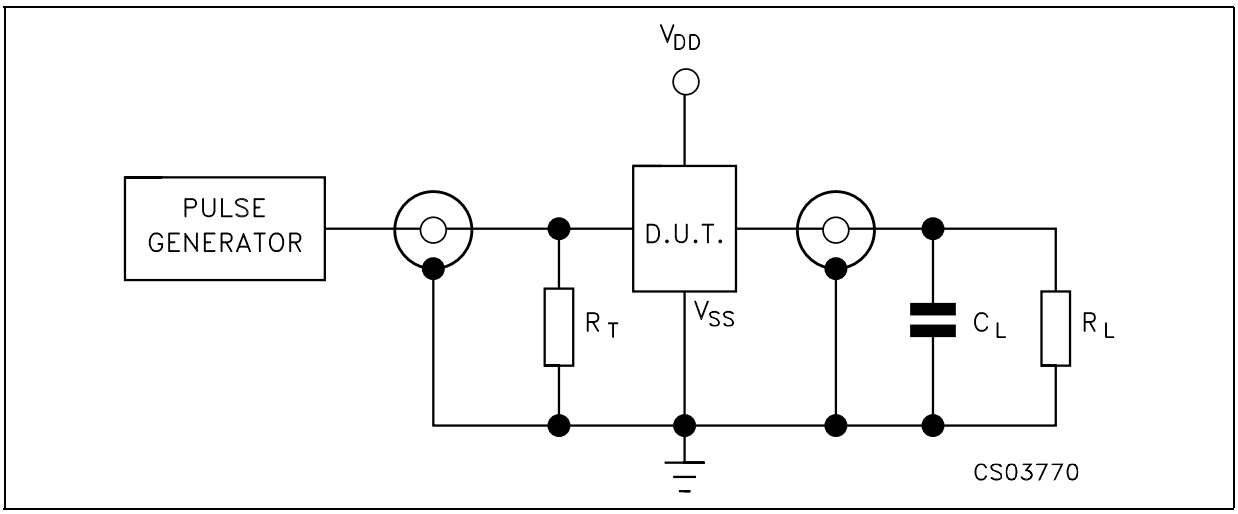

C_L = 50pF or equivalent (includes jig and probe capacitance)
R_L = 200KΩ
R_T = Z_{OUT} of pulse generator (typically 50Ω)

WAVEFORM: PROPAGATION DELAY TIMES (f=1MHz; 50% duty cycle)

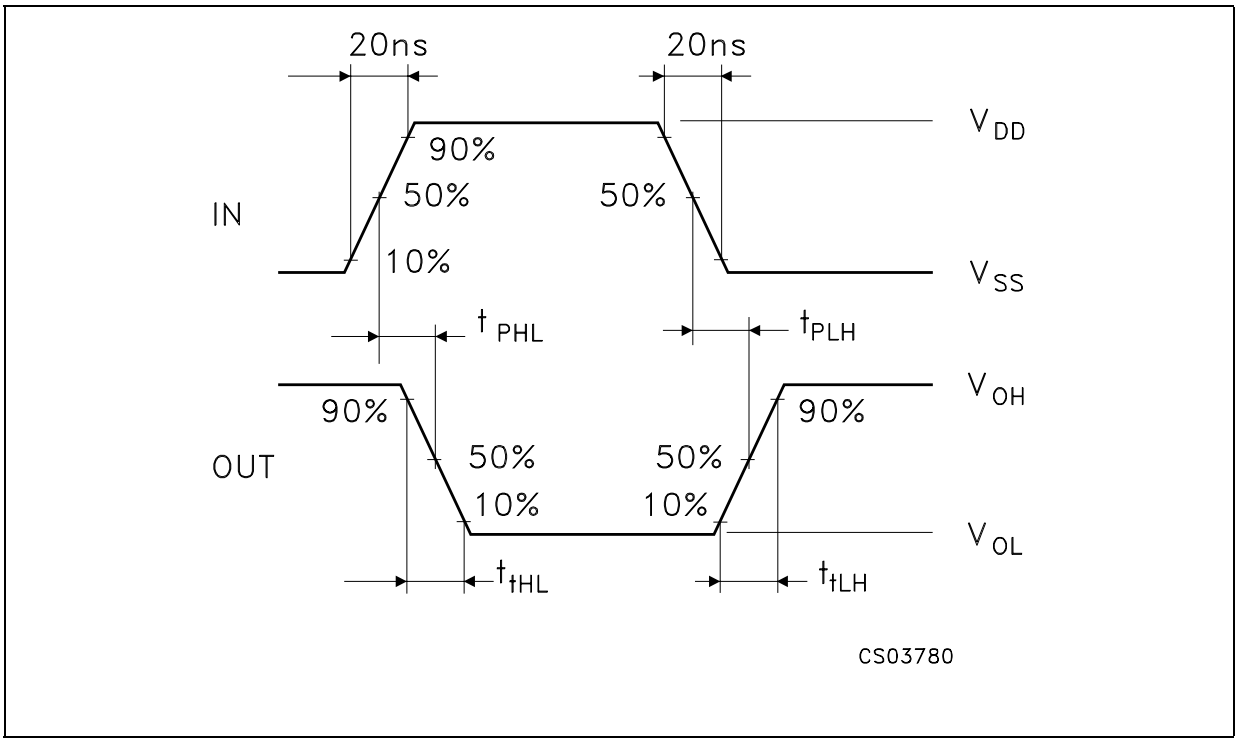

UICMall.com 友进芯城

Plastic DIP-14 MECHANICAL DATA

DIM.	mm.			inch		
	MIN.	TYP	MAX.	MIN.	TYP.	MAX.
a1	0.51			0.020		
B	1.39		1.65	0.055		0.065
b		0.5			0.020	
b1		0.25			0.010	
D			20			0.787
E		8.5			0.335	
e		2.54			0.100	
e3		15.24			0.600	
F			7.1			0.280
I			5.1			0.201
L		3.3			0.130	
Z	1.27		2.54	0.050		0.100

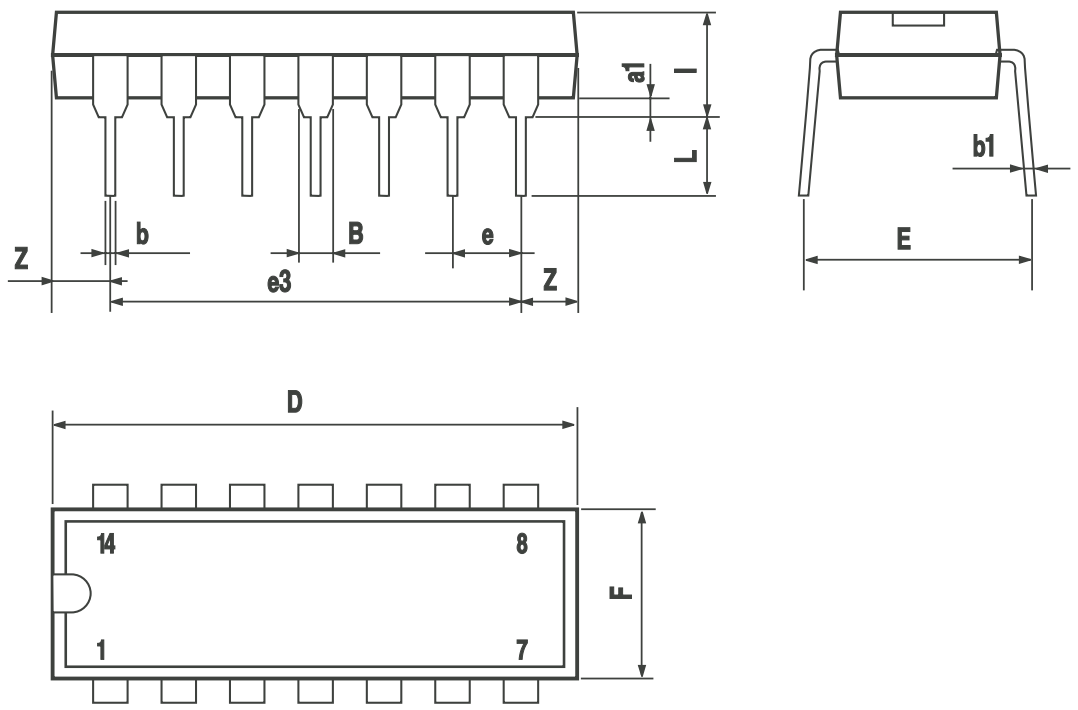

P001A

UICMall.com 友进芯城

SO-14 MECHANICAL DATA

DIM.	mm.			inch		
	MIN.	TYP	MAX.	MIN.	TYP.	MAX.
A			1.75			0.068
a1	0.1		0.2	0.003		0.007
a2			1.65			0.064
b	0.35		0.46	0.013		0.018
b1	0.19		0.25	0.007		0.010
C		0.5			0.019	
c1	45° (typ.)					
D	8.55		8.75	0.336		0.344
E	5.8		6.2	0.228		0.244
e		1.27			0.050	
e3		7.62			0.300	
F	3.8		4.0	0.149		0.157
G	4.6		5.3	0.181		0.208
L	0.5		1.27	0.019		0.050
M			0.68			0.026
S	8° (max.)					

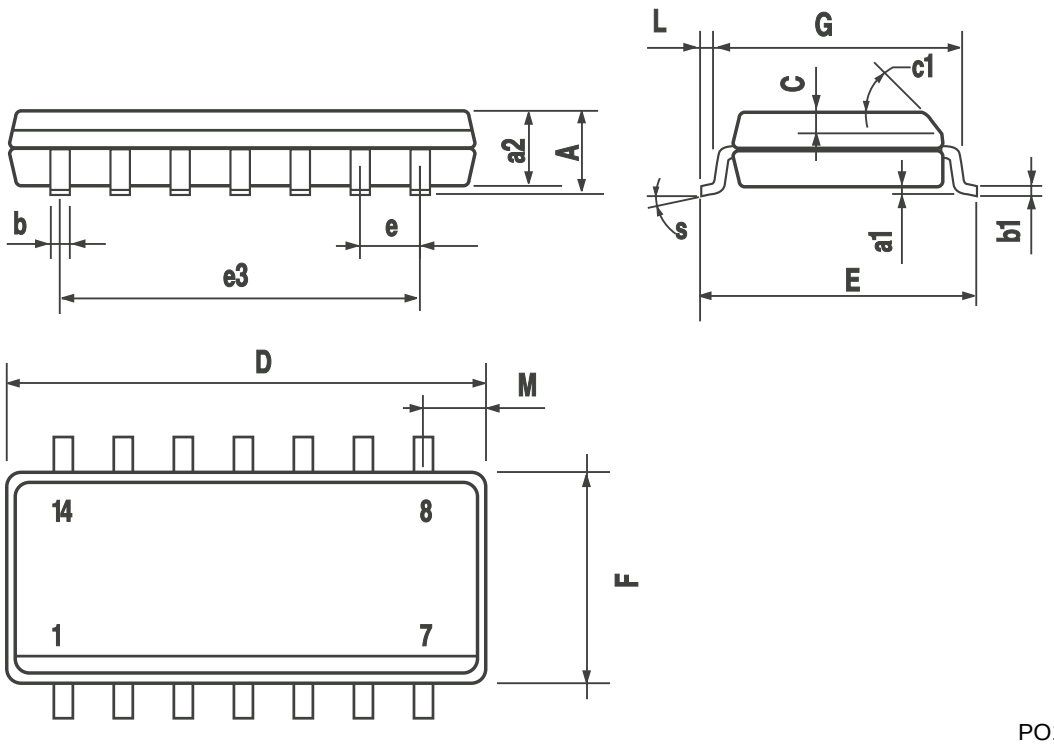

PO13G

UIC Mall.com 友进芯城

Tape & Reel SO-14 MECHANICAL DATA

DIM.	mm.			inch		
	MIN.	TYP	MAX.	MIN.	TYP.	MAX.
A			330			12.992
C	12.8		13.2	0.504		0.519
D	20.2			0.795		
N	60			2.362		
T			22.4			0.882
Ao	6.4		6.6	0.252		0.260
Bo	9		9.2	0.354		0.362
Ko	2.1		2.3	0.082		0.090
Po	3.9		4.1	0.153		0.161
P	7.9		8.1	0.311		0.319

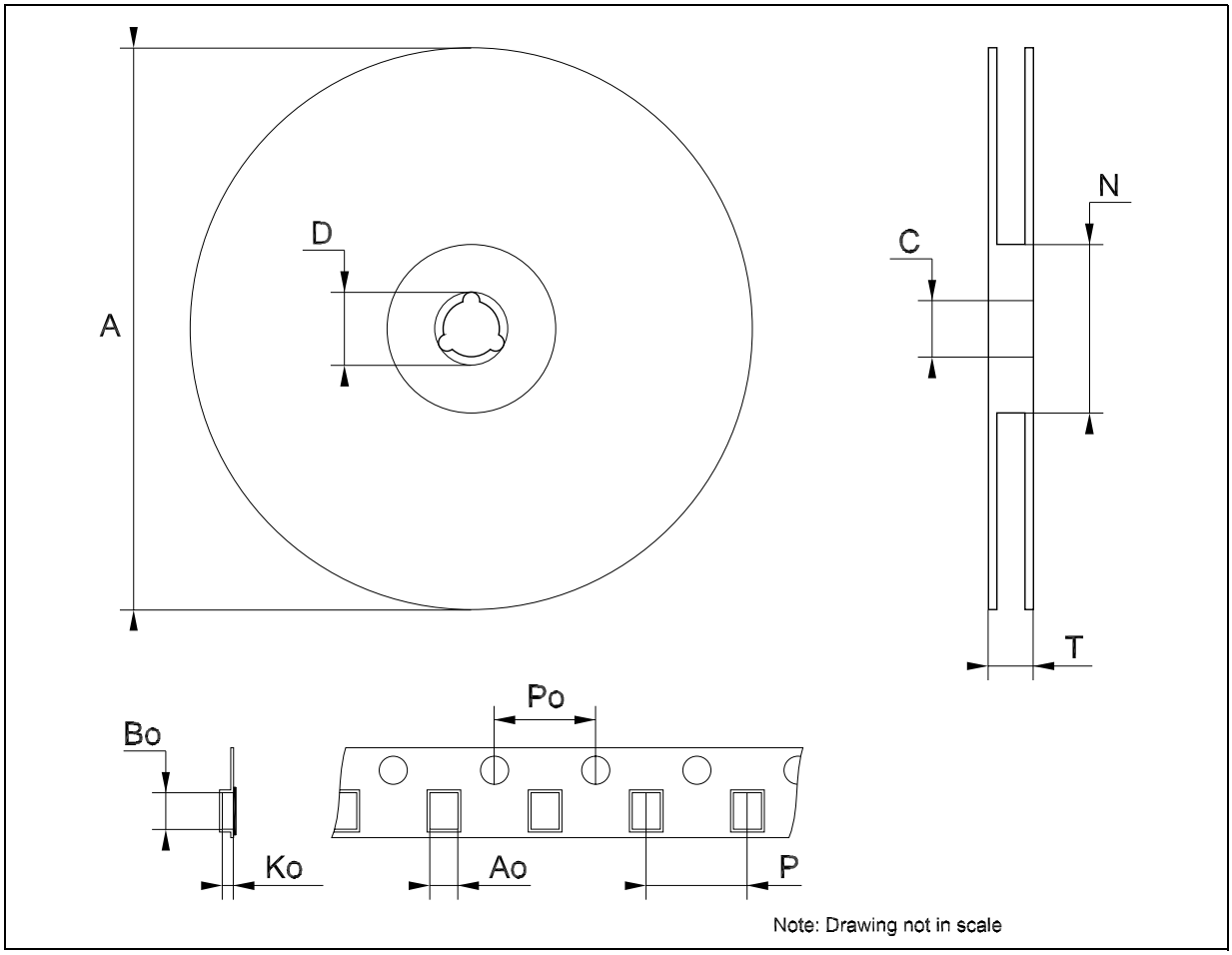

UICMall.com 友进芯城

Information furnished is believed to be accurate and reliable. However, STMicroelectronics assumes no responsibility for the consequences of use of such information nor for any infringement of patents or other rights of third parties which may result from its use. No license is granted by implication or otherwise under any patent or patent rights of STMicroelectronics. Specifications mentioned in this publication are subject to change without notice. This publication supersedes and replaces all information previously supplied. STMicroelectronics products are not authorized for use as critical components in life support devices or systems without express written approval of STMicroelectronics.

The ST logo is a registered trademark of STMicroelectronics

All other names are the property of their respective owners

© 2004 STMicroelectronics - All Rights Reserved

STMicroelectronics GROUP OF COMPANIES

Australia - Belgium - Brazil - Canada - China - Czech Republic - Finland - France - Germany - Hong Kong - India - Israel - Italy - Japan - Malaysia - Malta - Morocco - Singapore - Spain - Sweden - Switzerland - United Kingdom - United States.

http://www.st.com