THIS DRAWING IS UNPUBLISHED. RELEASED FOR PUBLICATION 2015
© COPYRIGHT 1997 BY TE CONNECTIVITY ALL RIGHTS RESERVED.

LOC	DIST

REVISIONS

P	LTR	DESCRIPTION	DATE	DWN	APVD
	D	REVISED PER E.O. P17811	24JUL2002	XS	RDR
	E	REVISED PER E.O. P21412	20JUL2012	AM	RDR
	F	REVISED PER ECO-14-019072	23FEB2015	JA	DM
	F1	REVISED PER ECO-16-013285	08SEP2016	DD	DM

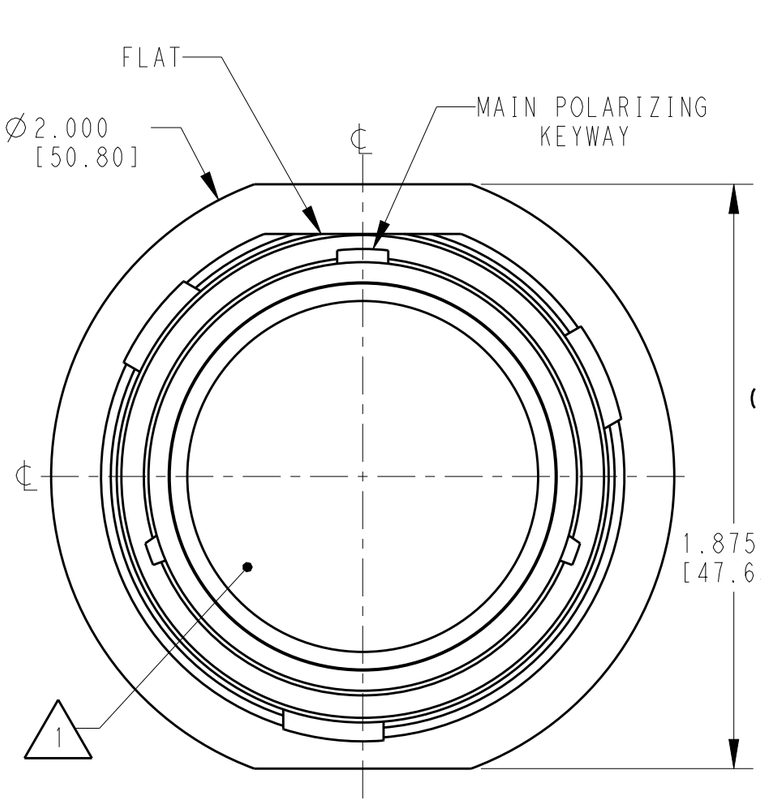

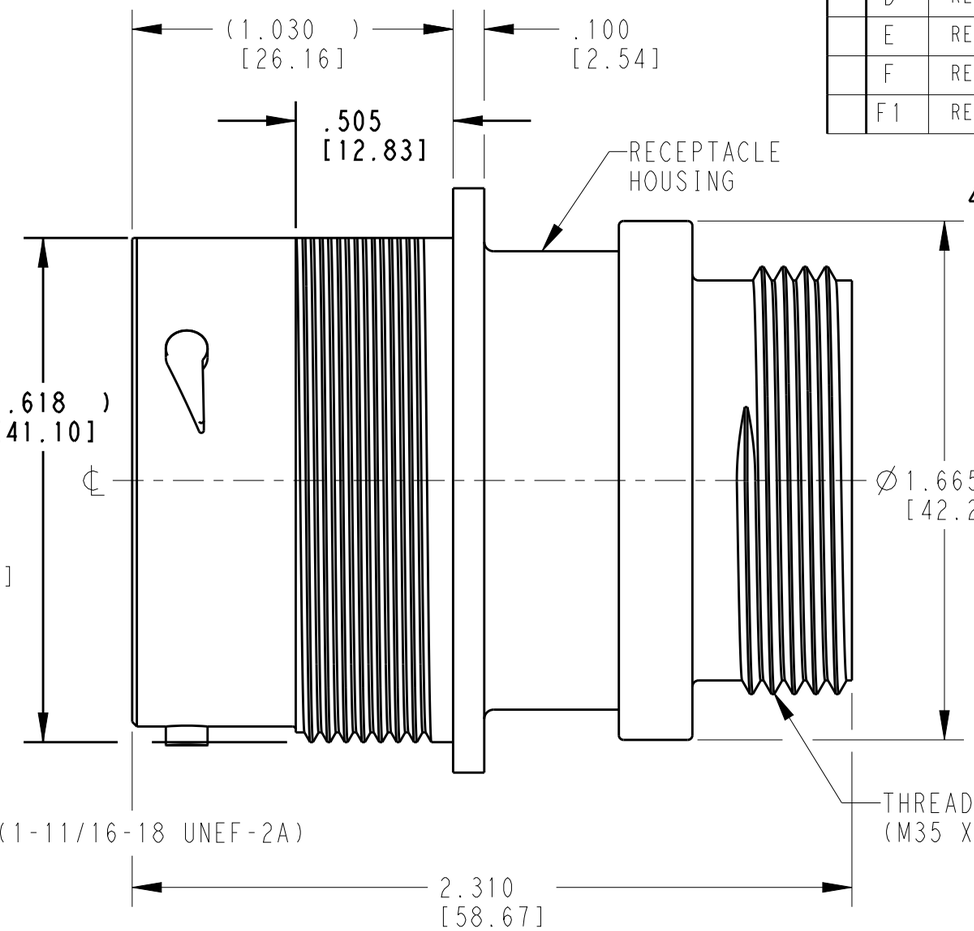

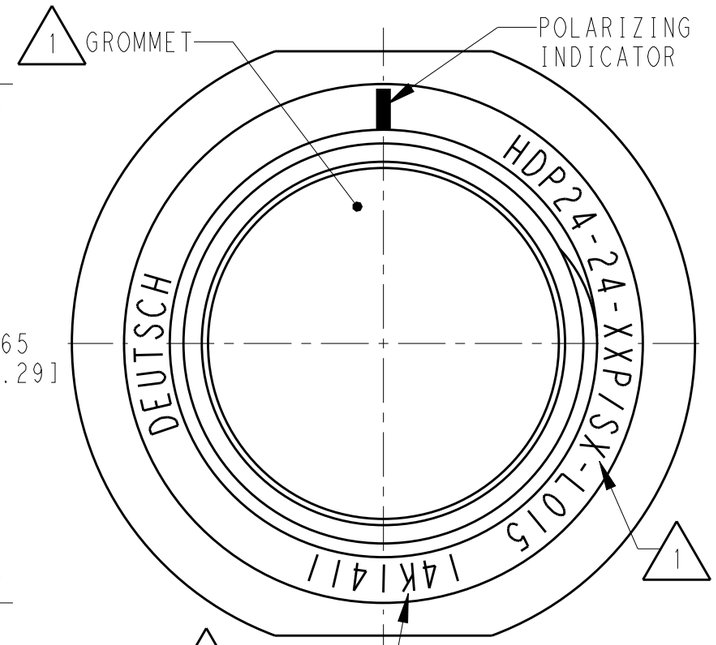

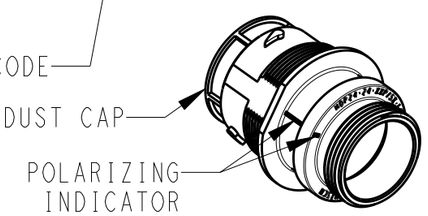

SCALE 1:2

5. RECEPTACLE IS SUPPLIED WITH DUST CAP (2415-001-2405).

4 MATERIAL: RECEPTACLE HOUSING: PA66 GF10 (BLACK)
CONDUIT ADAPTER: PA66 GF10 (GREEN, GRAY, BLUE)
GROMMET: SILICONE (ORANGE-RED)

3 SEE 0425-021-0000 APPLICATION SPECIFICATION
A. RECOMMENDED WIRE INSULATION RANGE
B. CONTACT REMOVAL TOOLS
C. RECOMMENDED MOUNTING HOLE & PANEL THICKNESS
D. MOUNTING HARDWARE & MOUNTING TORQUE.

2. THIS RECEPTACLE MATES WITH HDP26-24-XXP/SX-XXXX PLUG
X = SEAL TYPE (N,T,E)
XX = INSERT ARRANGEMENT
XXXX = MODIFICATION

1 SEE CUSTOMER DRAWING, 0425-014-2400 FOR AVAILABLE INSERT ARRANGEMENTS AND PART NUMBERS.

NOTES:

7. PART MODIFICATION: THREADED ADAPTER

6 CONDUIT ADAPTER ACCEPTS EITHER TYPES:
A. CONDUIT ADAPTER CAP NUT (CN21) AND SEAL RING (SRN21)
B. BACKSHELL (M902-2243)
COMPRESSION NUT (M902-2053)
CABLE Ø.430-.570 [10.92-14.78]
C. BACKSHELL (M902-2244)
COMPRESSION NUT (M902-2054)
CABLE Ø.570-710 [14.78-18.03]

8 DATE CODE: IDENTIFIES THE YEAR, MONTH, DAY AND HOUR OF ASSEMBLY.
YEAR: FIRST AND SECOND DIGITS. (14 = 2014)
MONTH: THRID DIGIT, EXCLUDING I. A = JAN., B = FEB., C = MARCH.... (K = OCTOBER)
DAY: FOURTH AND FIFTH DIGITS (14 = 14th DAY)
HOUR: SIXTH AND SEVENTH DIGITS (11 = 11AM)

THIS DRAWING IS A CONTROLLED DOCUMENT.

DIMENSIONS: INCHES[mm]

TOLERANCES UNLESS OTHERWISE SPECIFIED:
0 PLC ±
1 PLC ±
2 PLC ±
3 PLC ±.015 [0.38]
4 PLC ±
ANGLES ±0°30'0"

MATERIAL 4
FINISH N/A

DWN STEVE BEARD 04SEP1997
CHK PAUL BURKE 19JUL2002
APVD STEVE BEARD 23JUL2002
PRODUCT SPEC 0425-021-0000
APPLICATION SPEC 3
WEIGHT
Customer Drawing

TE Connectivity

NAME RECEPTACLE, THREADED
SIZE 24, -L015 MOD
HDP SERIES

SIZE	CAGE CODE	DRAWING NO	RESTRICTED TO
A3	4AFU8	C-HDP24-24-XXP/SX-L015 -	

SCALE 2:1 SHEET 1 OF 1 REV F1

1470-19 (3/11)

Mouser Electronics

Authorized Distributor

Click to View Pricing, Inventory, Delivery & Lifecycle Information:

TE Connectivity:
HDP24-24-19PE-L015