REVISION H

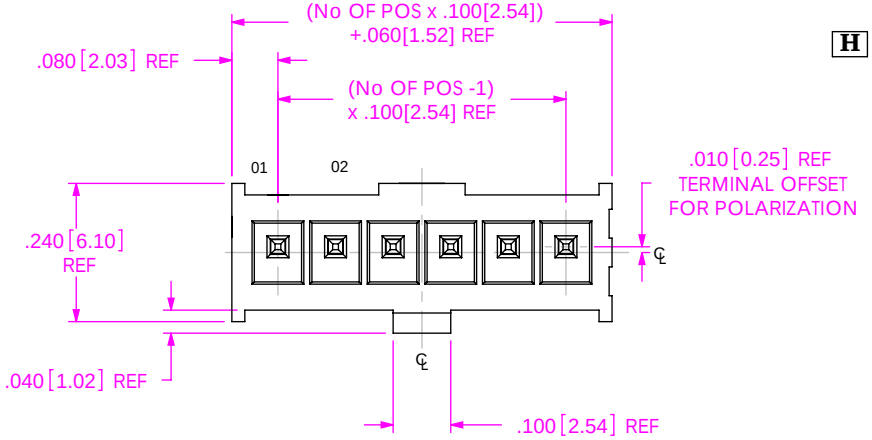

FIG. 1
IPL1-106-01-XXX-S SHOWN

IPL1-1XX-XX-XXX-S-XX-X

H No OF POSITIONS
-02 THRU -25

LEAD STYLE
-01: THROUGH HOLE
(USE T-1S64-XX-XX)
-02: SURFACE MOUNT
(SEE FIG. 2, SHT 2)
(USE T-1S64-XX-XX)

PLATING SPECIFICATION
-F: FLASH SELECTIVE (USE T-1S64-XX-F)
-L: LIGHT SELECTIVE (USE T-1S64-XX-L)
-S: SELECTIVE (USE T-1S64-XX-S)
-H: HEAVY GOLD (USE T-1S64-XX-H)
-FM: FLASH SELECTIVE/MATTE TIN TAILS (USE T-1S64-XX-F)
-LM: LIGHT SELECTIVE/MATTE TIN TAILS (USE T-1S64-XX-L)
-SM: SELECTIVE/MATTE TIN TAILS (USE T-1S64-XX-S)
-STL: LIGHT SELECTIVE TIN/LEAD (USE T-1S64-XX-STL)

ROW SPECIFICATION
-S: SINGLE (USE IPL1-XX-S)

OPTION
-RA: RIGHT ANGLE (SEE FIG. 3, SHT 3)
(AVAILABLE WITH -01 LEAD STYLE ONLY)

POLARIZATION OPTION
-K: KEYED POLARIZATION
(USE IPL1-XX-S-K)
(SEE FIG. 4, SHEET 3)

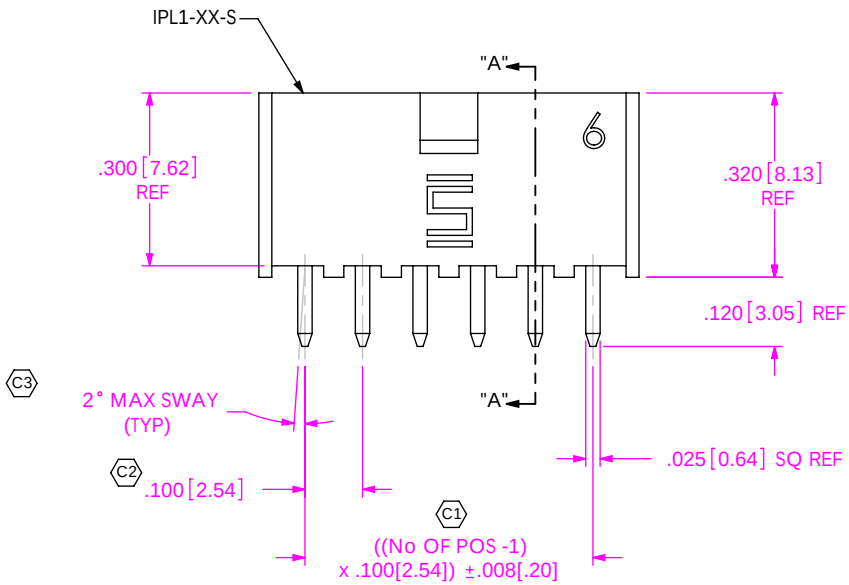

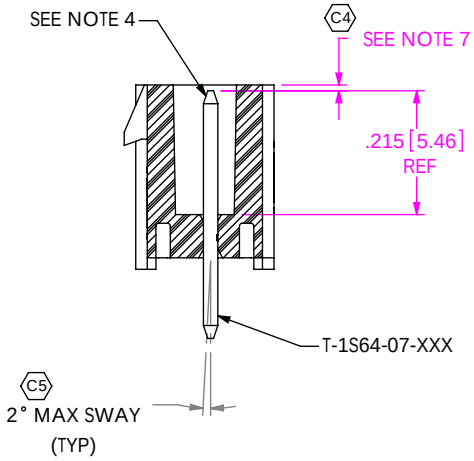

SECTION "A"-"A"

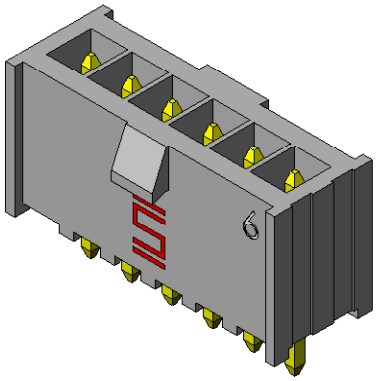

TABLE 1

LEAD STYLE	OPTION	TERMINAL 1	DIM. R
.92]	-01	NONE	T-1S64-07-XX	.430[10
.46]	-01	-RA	T-1S64-09-XX	.530[13
.30]	-02	NONE	T-1S64-08-XX	.445[11

NOTES:

1. Ⓒ REPRESENTS A CRITICAL DIMENSION.
2. MINIMUM TERMINAL RETENTION: 1 LB [4.45 N].
3. PARTS TO BE MOLDED TO POSITION.
4. POST MUST BE WITHIN .005[0.13] OF EACH OTHER.
5. ALL PIN TO PIN DIMENSIONS TO BE MEASURED FROM TIP TO TIP.
6. DIMENSION TO BE MEASURED AT BEND.
7. TIP TO BE FLUSH TO .015[0.38] BELOW TOP OF SHROUD.
8. NOTE DELETED.
9. PACKAGE ALL POSITIONS.

UNLESS OTHERWISE SPECIFIED, DIMENSIONS ARE IN INCHES.
TOLERANCES ARE:
DECIMALS: .XX: ±.01[0.3] .XXX: ±.005[0.13] .XXXX: ±.0020[0.051]
ANGLES: ± 2°

PROPRIETARY NOTE
THIS DOCUMENT CONTAINS INFORMATION CONFIDENTIAL AND PROPRIETARY TO SAMTEC, INC. AND SHALL NOT BE REPRODUCED OR TRANSFERRED TO OTHER DOCUMENTS OR DISCLOSED TO OTHERS OR USED FOR ANY PURPOSE OTHER THAN THAT WHICH IT WAS OBTAINED WITHOUT THE EXPRESSED WRITTEN CONSENT OF SAMTEC, INC.

samtec
520 PARK EAST BLVD, NEW ALBANY, IN 47150
PHONE: 812-944-6733 FAX: 812-948-5047
e-Mail: info@SAMTEC.com code: 55322

MATERIAL: DO NOT SCALE DRAWING SHEET SCALE: 3:1

STANDARD INSULATOR: LCP, COLOR: BLACK
-K INSULATOR: LCP, COLOR: NATURAL
TERMINAL: PHOS BRONZE

DESCRIPTION: .100[2.54] SINGLE ROW TERMINAL ASSEMBLY

DWG. NO. IPL1-1XX-XX-XXX-S-XX-X

F:\DWG\MISC\MKTG\IPL1-1XX-XX-XXX-S-XX-X-MKT.SLDDRW

BY: D PURVIS 05/02/2005 SHEET 1 OF 3

REVISION H

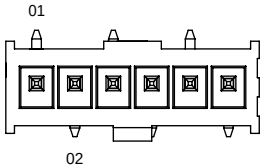

FIG. 2

STYLE -02: SURFACE MOUNT

IPL1-106-02-XXX-S SHOWN

[DIFFERENT AS SHOWN, OTHERWISE SAME AS FIG. 1]

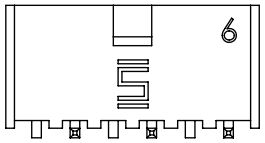

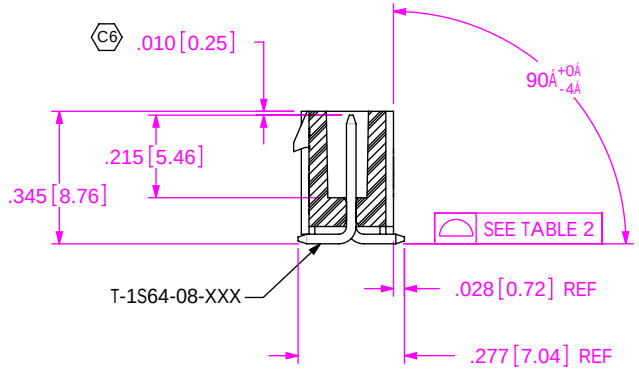

TABLE 2	
No OF POS.	COPLANARITY
-02 THRU -05	.004[0.10]
-06 THRU -10	.005[0.13]

-02: SURFACE MOUNT IN-PROCESS 1

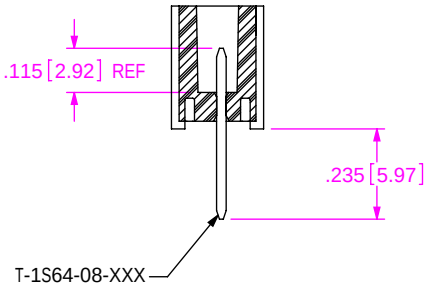

PACKAGING VIEWS

(PARTS TO HAVE POSITION #1 LOADED
IN SAME DIRECTION AS ARROW ON TUBE)

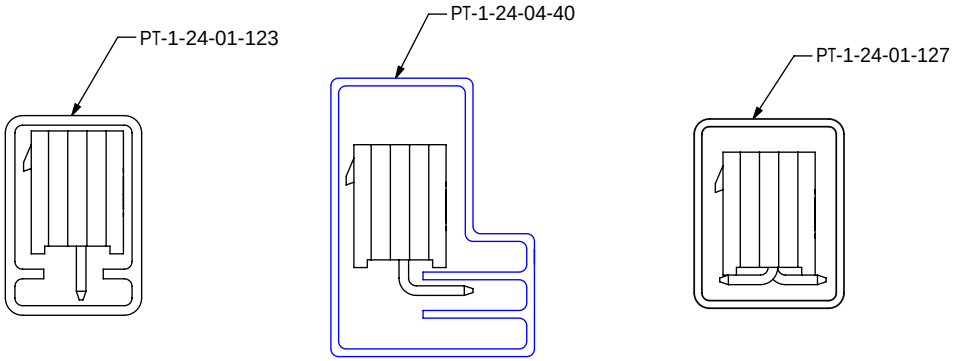

PACKAGING TABLE			
LEAD STYLE	OPTION	PACKAGING TUBE	PLUG
-01	NONE	PT-1-24-01-123	TP-09
-01	-RA	PT-1-24-04-40	TP-07
-02	NONE	PT-1-24-01-127	TP-07

-02: SURFACE MOUNT IN-PROCESS 2

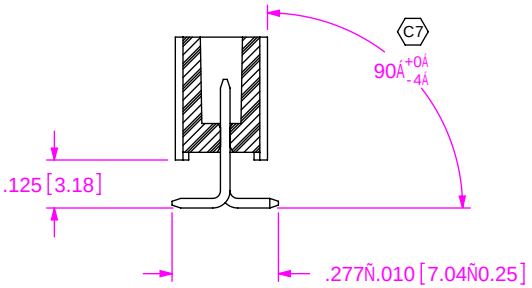

F:\DWG\MISC\MKTG\IPL1-1XX-XX-XXX-S-XX-X-MKT.SLDDRW

PROPRIETARY NOTE

THIS DOCUMENT CONTAINS INFORMATION CONFIDENTIAL AND PROPRIETARY TO SAMTEC, INC. AND SHALL NOT BE REPRODUCED OR TRANSFERRED TO OTHER DOCUMENTS OR DISCLOSED TO OTHERS OR USED FOR ANY PURPOSE OTHER THAN THAT WHICH IT WAS OBTAINED WITHOUT THE EXPRESSED WRITTEN CONSENT OF SAMTEC, INC.

DO NOT SCALE DRAWING

SHEET SCALE: 2:1

520 PARK EAST BLVD, NEW ALBANY, IN 47150
PHONE: 812-944-6733 FAX: 812-948-5047
e-Mail: info@SAMTEC.com code: 55322

DESCRIPTION:
.100[2.54] SINGLE ROW TERMINAL ASSEMBLY

DWG. NO.
IPL1-1XX-XX-XXX-S-XX-X

BY: D PURVIS 05/02/2005 SHEET 2 OF 3

REVISION H

-RA: IN-PROCESS 1

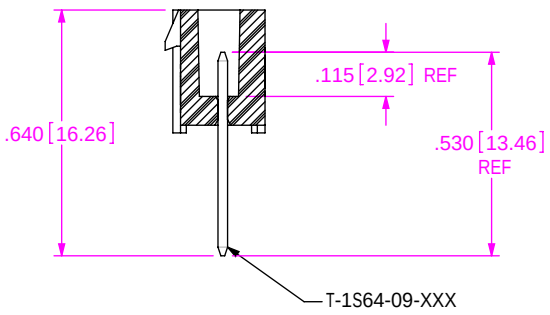

-RA: IN-PROCESS 2

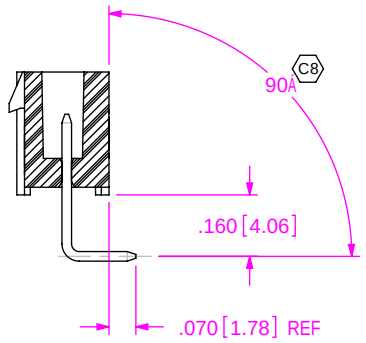

FIG. 4

-K: KEYED POLARIZATION
(IPL1-106-01-XXX-S-K SHOWN)
(SAME AS FIG. 1 UNLESS OTHERWISE STATED)

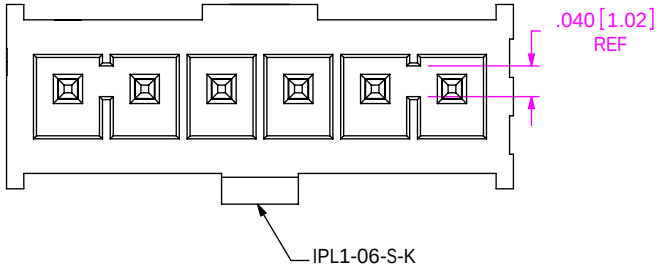

FIG. 3

-RA: RIGHT ANGLE
IPL1-106-01-XXX-S-RA SHOWN
[DIFFERENT AS SHOWN, OTHERWISE SAME AS FIG. 1]

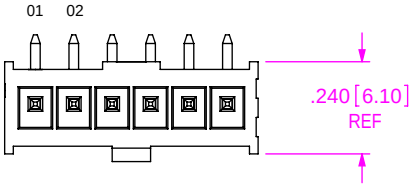

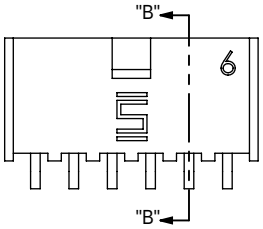

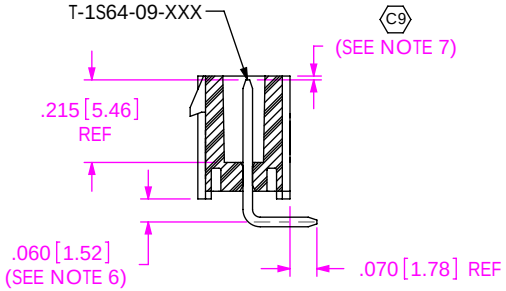

SECTION "B"-"B"

F:\DWG\MISC\MKTG\IPL1-1XX-XX-XXX-S-XX-X-MKT.SLDDRW

PROPRIETARY NOTE

THIS DOCUMENT CONTAINS INFORMATION CONFIDENTIAL AND PROPRIETARY TO SAMTEC, INC. AND SHALL NOT BE REPRODUCED OR TRANSFERRED TO OTHER DOCUMENTS OR DISCLOSED TO OTHERS OR USED FOR ANY PURPOSE OTHER THAN THAT WHICH IT WAS OBTAINED WITHOUT THE EXPRESSED WRITTEN CONSENT OF SAMTEC, INC.

DO NOT SCALE DRAWING

SHEET SCALE: 2:1

samtec
520 PARK EAST BLVD, NEW ALBANY, IN 47150
PHONE: 812-944-6733 FAX: 812-948-5047
e-Mail: info@SAMTEC.com code: 55322

DESCRIPTION:
.100[2.54] SINGLE ROW TERMINAL ASSEMBLY

DWG. NO.
IPL1-1XX-XX-XXX-S-XX-X

BY: D PURVIS 05/02/2005 SHEET 3 OF 3