CONVERSION CHART	
INCH	MM
.003	0,08
.004	0,10
.008	0,20
.012	0,30
.015	0,38
.02	0,5
.020 .157	0,51 3,98
.059	1,50
.126	3,20
.157	3,99
.158 .630	4,01 16,00
.236	5,99
.251	6,38
.314	7,98
.393	9,98
.433	11,00
.500	12,7
.631 2.520	16,03 57,15
.708	17,98
.826	20,98
.950	24,13
1.000	25,4

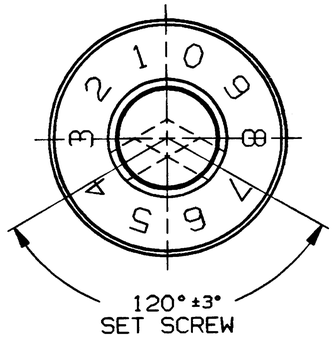

KBS-500-10

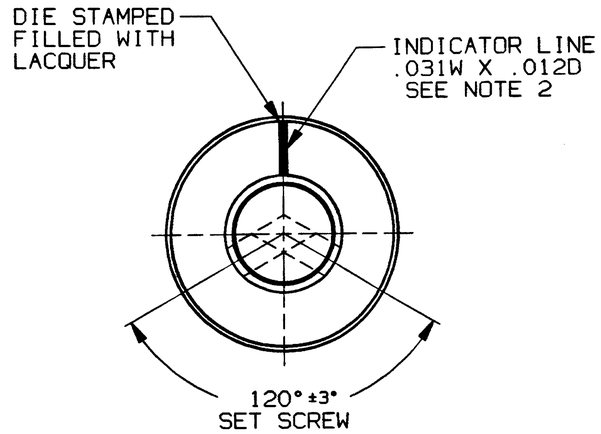

KBS-500

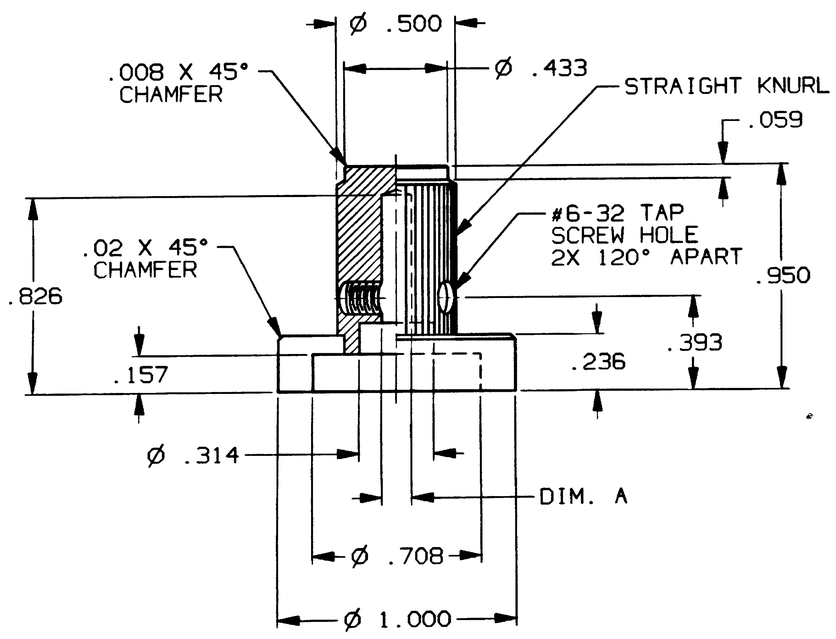

SPECIFICATIONS:

MATERIALS:
MATERIAL: ALUMINUM.
FINISH: SEE NOTE 2.

NOTES:

1. INTERPRET DRAWING PER ASME Y14.5M-1994.
2. FINISH ADD SUFFIX "A" TO MODEL NO. FOR NATURAL ALUMINUM BODY WITH BLACK INDICATOR LINE, ADD SUFFIX "B" TO MODEL NO. FOR BLACK ANODIZED BODY WITH WHITE INDICATOR LINE.

SHAFT HOLE DIA. DIM. A	
1/4	$.251^{+.003}_{-.000}$
1/8	$.126^{+.003}_{-.000}$

REV	REVISIONS	
0	INITIAL RELEASE ESR#A7067 SEK 11-15-95 APP'D:	11-15-95

OUTLINE DRAWING

SPECIFICATIONS ARE SUBJECT TO CHANGES WITHOUT NOTICE

THIS IS A C.A.D. GENERATED DRAWING. DO NOT MAKE MANUAL REVISIONS TO MASTER.

THIRD ANGLE PROJECTION

TOLERANCES (EXCEPT AS NOTED)
ANGULAR = ±3°
DECIMAL .XX = ±
DECIMAL .XXX = ±.015
DECIMAL .XXXX = ±

AUGAT CONFIDENTIAL
This document contains information which is the exclusive property of Augat Inc.
Distribution, reproduction or use by others is not permitted without the expressed written consent of Augat Inc.

UNLESS OTHERWISE SPECIFIED DIMENSIONS ARE IN INCHES DO NOT SCALE PRINT

FILE NAME: 80248OUT
DIRECTORY: KNOBS

MATERIAL: SEE SPECIFICATIONS

FINISH: SEE SPECIFICATIONS

ORIGINAL DATE OF DRAWING: 11-15-95

DRAWN: S.KIRCORIAN
DATE: 11-15-95

CHECKED:
DATE:

APPROVED:
DATE: 11-15-95

CODE IDENT. NO. 91506
DWG. SIZE C

NEXT ASSY:

AUGAT INC.
452 JOHN DIETSCH BLVD.
ATTLEBORO FALLS, MASS. 02763

TITLE: OUTLINE DRAWING
KNOB
(KBS-500)

DWG. NO. 80248-SD
REV. 0

PRODUCT CODE: M11

SCALE: 2:1
SHEET 1 OF 1

CAD080992C

Property of Tyco Electronics Corporation May. 2002
CUSTOMER DRWG: 4-1437621-7 REV: 99 PG 1 OF 1

Mouser Electronics

Authorized Distributor

Click to View Pricing, Inventory, Delivery & Lifecycle Information:

TE Connectivity:
KBS500B101/4