LH1513AB/AAC/AACTR

2 Form A
Solid State Relay

FEATURES
- **Current Limit Protection**
- **I/O Isolation, 5300 V_{RMS}**
- **Typical R_{ON} 10 Ω**
- **Load Voltage 200 V**
- **Load Current 140 mA**
- **High Surge Capability**
- **Linear, AC/DC Operation**
- **Clean Bounce Free Switching**
- **Low Power Consumption**
- **High Reliability Monolithic Receptor**
- **SMD Lead Available on Tape and Reel**
- **Flammability; UL94,VØ**

AGENCY APPROVALS
- **UL – File No. E52744**
- **CSA – Certification 093751**
- **VDE 0884 Approval**

APPLICATIONS
- **General Telecom Switching**
  - **On/off Hook Control**
  - **Ring Delay**
  - **Dial Pulse**
  - **Ground Start**
  - **Ground Fault Protection**
- **Instrumentation**
- **Industrial Controls**

DESCRIPTION
The LH1513 relays are DPST normally open switches (2 Form A) that can replace electromechanical relays in many applications. The relays are constructed using a GaAlAs LED for actuation control and an integrated monolithic die for the switch output. The die, fabricated in a high-voltage dielectrically isolated technology, is comprised of a photodiode array, switch control circuity, and DMOS switches. In addition, these relays employ current-limiting circuity, enabling them to pass FCC 68.302 and other regulatory voltage surge requirements when overvoltage protection is provided.

Package Dimensions in Inches (mm)

DIP

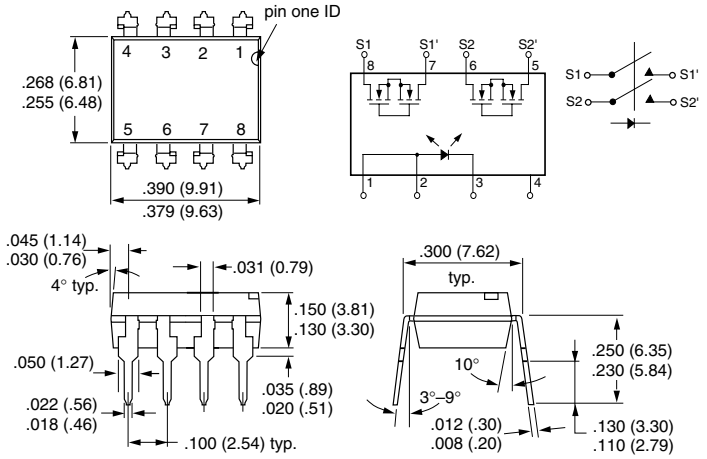

SMD

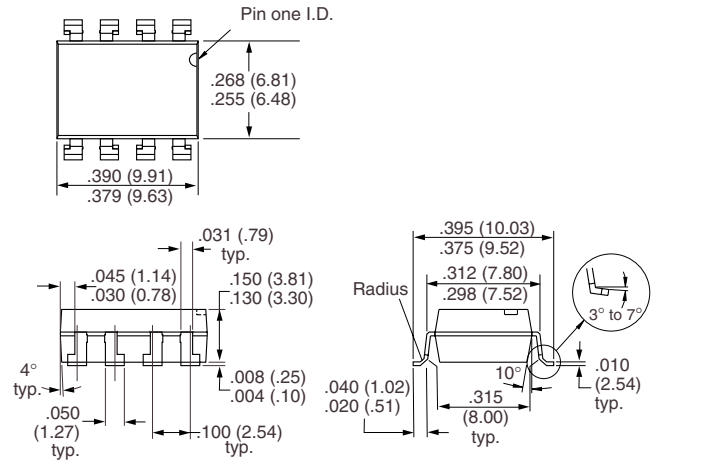

Part Identification

Part Number	Description
LH1513AB	8-pin DIP, Tubes
LH1513AAC	8-pin SMD, Gullwing, Tubes
LH1513AACTR	8-pin SMD, Gullwing, Tape and Reel

© 2001 Infineon Technologies Corp. • Optoelectronics Division • San Jose, CA
www.infineon.com/opto • 1-888-Infineon (1-888-463-4636)

© 2001 Infineon Technologies Corp. • Optoelectr