Axial Leads/Ceralam®

GENERAL DESCRIPTION

AVX MA Series

Molded Axial Leaded MLC

Temperature Coefficient: C0G (NP0), X7R, Z5U
50V, 100V and 200V

Case Material: Molded Epoxy

Lead Material: Solderable

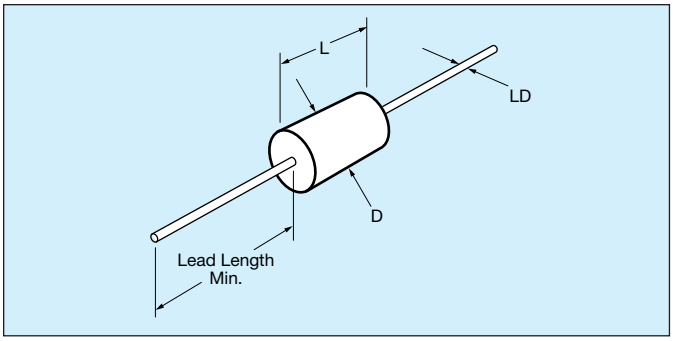

HOW TO ORDER

MA10	5	E	104	Z	A	A
Molded Axial Size	**Voltage**	**Dielectric**	**Capacitance**	**Capacitance Tolerance**	**Failure Rate**	**Leads**
MA10 MA20 MA30 MA40 MA50 MA60	5 = 50V 1 = 100V 2 = 200V	A = C0G (NP0) C = X7R E = Z5U	First two digits are the significant figures of capacitance. Third digit indicates the additional number of zeros. For example, order 100,000 pF as 104. (For values below 10pF use "R" in place of decimal point, e.g., 1R4 = 1.4pF.)	C0G (NP0): F = ±1% J = ±5% K = ±10% M = ±20% D = ±0.5pF <10pF only X7R: J = ±5% K = ±10% M = ±20% Z5U: M = ±20% Z = +80% -20%	A = Not Applicable	A = Standard

Not RoHS Compliant

‡ C tolerance available C0G (NP0) from 1.0 to 9.1 pF only. Minimum tolerance for values 10 pF - 100 pF is D or F whichever is greater.

MARKING (EXAMPLE)

Line 1, A (for AVX), 5 = 50 Volts (V is optional),
E = TC Line 2, 104Z = Capacitance Code

Line 3, Tolerance, 2 digit Lot Code
Date Code: 8 = 2008
10 = Week

Four Digit Date Code Optional

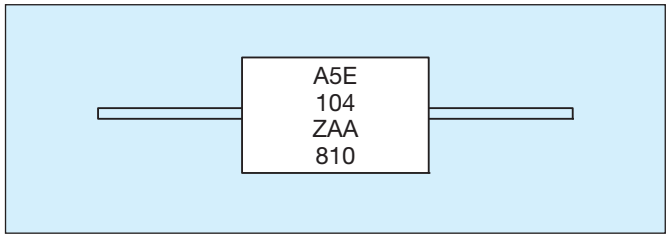

MILITARY CROSS REFERENCE AND DIMENSIONS GUIDE

Per MIL-Spec				Case Size		
AVX Style	**MIL-C-11015**	**MIL-PRF-39014**	**MIL-PRF-20**	**Length (L)**	**Diameter (D)**	**Lead Diameter (LD)**
MA10	CK12	CKR11	CCR75/CC75	4.07 ± .25 (.160" ± .010")	2.29 ± .25 (.090" ± .010")	.48 ± .05 (.019" ± .002")
MA20	CK13	CKR12	CCR76/CC76	6.35 ± .25 (.250" ± .010")	2.29 ± .25 (.090" ± .010")	.48 ± .05 (.019" ± .002")
MA40	CK14	CKR14	CCR77/CC77	9.91 ± .25 (.390" ± .010")	3.56 ± .25 (.140" ± .010")	.63 ± .05 (.025" ± .002")
MA50	CK15	CKR15	CCR78/CC78	12.7 ± .51 (.500" ± .020")	6.35 ± .38 (.250" ± .015")	.63 ± .05 (.025" ± .002")
MA60	CK16	CKR16	CCR79/CC79	17.53 ± .51 (.690" ± .020")	8.89 ± .51 (.350" ± .015")	.63 ± .05 (.025" ± .002")

For Military/Established Reliability Molded/Axial Lead see MIL-C-11015, MIL-PRF-39014, MIL-PRF-20 Section.

Dimensions: Millimeters (Inches)

Axial Leads/Ceralam®

C0G (NP0) Dielectric

SIZE AND CAPACITANCE SPECIFICATIONS

Dimensions: Millimeters (Inches)

	AVX Style	MA10			MA20			MA30			MA40			MA50			MA60		
	Length	4.07 ± .25 (.160" ± .010")			6.35 ± .25 (.250" ± .010")			6.09 ± .25 (.240" ± .010")			9.91 ± .25 (.390" ± .010")			12.7 ± .51 (.500" ± .020")			17.53 ± .51 (.690" ± .020")		
	Diameter	2.29 ± .25 (.090" ± .010")			2.29 ± .25 (.090" ± .010")			3.30 ± .25 (.130" ± .010")			3.56 ± .25 (.140" ± .010")			6.35 ± .38 (.250" ± .015")			8.89 ± .51 (.350" ± .015")		
	Lead Diameter	.48 ± .05 (.019" ± .002")			.48 ± .05 (.019" ± .002")			.48 ± .05 (.019" ± .002")			.63 ± .05 (.025" ± .002")			.63 ± .05 (.025" ± .002")			.63 ± .05 (.025" ± .002")		
	Lead Length	25.4 (1.00")			25.4 (1.00")			25.4 (1.00")			25.4 (1.00")			25.4 (1.00")			25.4 (1.00")		
Cap. in pF	Typical AVX Part Nos.	WVDC			WVDC			WVDC			WVDC			WVDC			WVDC		
		200	100	50	200	100	50	200	100	50	200	100	50	200	100	50	200	100	50
1.0 to 9.1	MA-----5A1R0DAA MA-----5A9R1DAA	■	■	■															
10 12 15	MA----5A100KAA MA----5A120KAA MA----5A150KAA	■	■	■															
18 22 27	MA----5A180KAA MA----5A220KAA MA----5A270KAA	■	■	■															
33 39 47	MA-----5A330KAA MA-----5A390KAA MA-----5A470KAA	■	■	■															
56 68 82	MA----5A560KAA MA----5A680KAA MA----5A820KAA	■	■	■															
100 120 150	MA----5A101KAA MA----5A121KAA MA----5A151KAA	■	■	■	■	■	■												
180 220 270	MA----5A181KAA MA----5A221KAA MA----5A271KAA	■	■	■	■	■	■	■	■	■	■	■	■						
330 390 470	MA----5A331KAA MA----5A391KAA MA----5A471KAA		■	■		■	■	■	■	■	■	■	■						
560 680 820	MA----5A561KAA MA----5A681KAA MA----5A821KAA		■	■		■	■	■	■	■	■	■	■						
1000 1200 1500	MA----5A102KAA MA----5A122KAA MA----5A152KAA			■		■	■	■	■	■	■	■	■	■	■	■			
1800 2200 2700	MA----5A182KAA MA----5A222KAA MA----5A272KAA						■		■	■	■	■	■	■	■	■			
3300 3900 4700	MA----5A332KAA MA----5A392KAA MA----5A472KAA								■	■		■	■	■	■	■	■	■	■
5600 6800 8200	MA----5A562KAA MA----5A682KAA MA----5A822KAA									■		■	■	■	■	■	■	■	■
10,000 12,000 15,000	MA----5A103KAA MA----5A123KAA MA----5A153KAA												■		■	■	■	■	■
18,000 22,000 27,000	MA----5A183KAA MA----5A223KAA MA----5A273KAA														■	■	■	■	■
33,000 39,000 47,000	MA----5A333KAA MA----5A393KAA MA----5A473KAA															■		■	■
56,000 68,000 82,000	MA----5A563KAA MA----5A683KAA MA----5A823KAA															■		■	■
100,000 120,000 150,000	MA----5A104KAA MA----5A124KAA MA----5A154KAA																		■

For other tolerances see Part No. Codes
For other voltages see Part No. Codes.
AVX Style

Axial Leads/Ceralam®

X7R Dielectric

SIZE AND CAPACITANCE SPECIFICATIONS

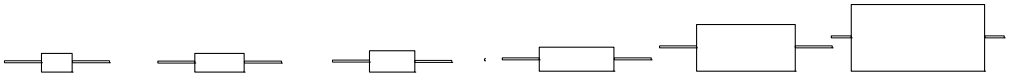

Dimensions: Millimeters (Inches)

	AVX Style	MA10			MA20			MA30			MA40			MA50			MA60		
	Length	4.07 ± .25 (.160" ± .010")			6.35 ± .25 (.250" ± .010")			6.09 ± .25 (.240" ± .010")			9.91 ± .25 (.390" ± .010")			12.7 ± .51 (.500" ± .020")			17.53 ± .51 (.690" ± .020")		
	Diameter	2.29 ± .25 (.090" ± .010")			2.29 ± .25 (.090" ± .010")			3.30 ± .25 (.130" ± .010")			3.56 ± .25 (.140" ± .010")			6.35 ± .38 (.250" ± .015")			8.89 ± .51 (.350" ± .015")		
	Lead Diameter	.48 ± .05 (.019" ± .002")			.48 ± .05 (.019" ± .002")			.48 ± .05 (.019" ± .002")			.63 ± .05 (.025" ± .002")			.63 ± .05 (.025" ± .002")			.63 ± .05 (.025" ± .002")		
	Lead Length	25.4 (1.00")			25.4 (1.00")			25.4 (1.00")			25.4 (1.00")			25.4 (1.00")			25.4 (1.00")		
Cap. in pF	Typical AVX Part Nos.	WVDC			WVDC			WVDC			WVDC			WVDC			WVDC		
		200	100	50	200	100	50	200	100	50	200	100	50	200	100	50	200	100	50
220	MA____5C221KAA																		
270	MA____5C271KAA																		
330	MA____5C331KAA																		
390	MA____5C391KAA																		
470	MA____5C471KAA																		
560	MA____5C561KAA																		
680	MA____5C681KAA																		
820	MA____5C821KAA																		
1000	MA____5C102KAA																		
1200	MA____5C122KAA																		
1500	MA____5C152KAA																		
1800	MA____5C182KAA																		
2200	MA____5C222KAA																		
2700	MA____5C272KAA																		
3300	MA____5C332KAA																		
3900	MA____5C392KAA																		
4700	MA____5C472KAA																		
5600	MA____5C562KAA																		
6800	MA____5C682KAA																		
8200	MA____5C822KAA																		
10,000	MA____5C103KAA																		
12,000	MA____5C123KAA																		
15,000	MA____5C153KAA																		
18,000	MA____5C183KAA																		
22,000	MA____5C223KAA																		
27,000	MA____5C273KAA																		
33,000	MA____5C333KAA																		
39,000	MA____5C393KAA																		
47,000	MA____5C473KAA																		
56,000	MA____5C563KAA																		
68,000	MA____5C683KAA																		
82,000	MA____5C823KAA																		
100,000	MA____5C104KAA																		
120,000	MA____5C124KAA																		
150,000	MA____5C154KAA																		
180,000	MA____5C184KAA																		
220,000	MA____5C224KAA																		
270,000	MA____5C274KAA																		
330,000	MA____5C334KAA																		
390,000	MA____5C394KAA																		
470,000	MA____5C474KAA																		
560,000	MA____5C564KAA																		
680,000	MA____5C684KAA																		
820,000	MA____5C824KAA																		
1.0 µF	MA____5C105KAA																		
1.2 µF	MA____5C125KAA																		
1.5 µF	MA____5C155KAA																		
1.8 µF	MA____5C185KAA																		
2.2 µF	MA____5C225KAA																		
2.7 µF	MA____5C275KAA																		
3.3 µF	MA____5C335KAA																		
3.9 µF	MA____5C395KAA																		

For other tolerances see Part No. Codes
For other voltages see Part No. Codes.
AVX Style

Axial Leads/Ceralam®

Z5U Dielectric

SIZE AND CAPACITANCE SPECIFICATIONS

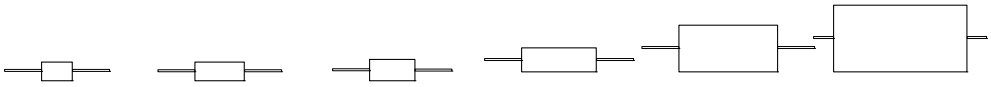

Dimensions: Millimeters (Inches)

AVX Style		MA10			MA20			MA30			MA40			MA50			MA60		
Length		4.07 ± .25 (.160" ± .010")			6.35 ± .25 (.250" ± .010")			6.09 ± .25 (.240" ± .010")			9.91 ± .25 (.390" ± .010")			12.7 ± .51 (.500" ± .020")			17.53 ± .51 (.690" ± .020")		
Diameter		2.29 ± .25 (.090" ± .010")			2.29 ± .25 (.090" ± .010")			3.30 ± .25 (.130" ± .010")			3.56 ± .25 (.140" ± .010")			6.35 ± .38 (.250" ± .015")			8.89 ± .51 (.350" ± .015")		
Lead Diameter		.48 ± .05 (.019" ± .002")			.48 ± .05 (.019" ± .002")			.48 ± .05 (.019" ± .002")			.63 ± .05 (.025" ± .002")			.63 ± .05 (.025" ± .002")			.63 ± .05 (.025" ± .002")		
Lead Length		25.4 (1.00")			25.4 (1.00")			25.4 (1.00")			25.4 (1.00")			25.4 (1.00")			25.4 (1.00")		
Cap. in pF	Typical AVX Part Nos.	WVDC			WVDC			WVDC			WVDC			WVDC			WVDC		
		200	100	50	200	100	50	200	100	50	200	100	50	200	100	50	200	100	50
1000	MA___5E102ZAA																		
1200	MA___5E122ZAA																		
1500	MA___5E152ZAA																		
1800	MA___5E182ZAA																		
2200	MA___5E222ZAA																		
2700	MA___5E272ZAA																		
3300	MA___5E332ZAA																		
3900	MA___5E392ZAA																		
4700	MA___5E472ZAA																		
5600	MA___5E562ZAA																		
6800	MA___5E682ZAA																		
8200	MA___5E822ZAA																		
10,000	MA___5E103ZAA																		
12,000	MA___5E123ZAA																		
15,000	MA___5E153ZAA																		
18,000	MA___5E183ZAA																		
22,000	MA___5E223ZAA																		
27,000	MA___5E273ZAA																		
33,000	MA___5E333ZAA																		
39,000	MA___5E393ZAA																		
47,000	MA___5E473ZAA																		
56,000	MA___5E563ZAA																		
68,000	MA___5E683ZAA																		
82,000	MA___5E823ZAA																		
100,000	MA___5E104ZAA																		
120,000	MA___5E124ZAA																		
150,000	MA___5E154ZAA																		
180,000	MA___5E184ZAA																		
220,000	MA___5E224ZAA																		
270,000	MA___5E274ZAA																		
330,000	MA___5E334ZAA																		
390,000	MA___5E394ZAA																		
470,000	MA___5E474ZAA																		
560,000	MA___5E564ZAA																		
680,000	MA___5E684ZAA																		
820,000	MA___5E824ZAA																		
1.0 µF	MA___5E105ZAA																		
1.2 µF	MA___5E125ZAA																		
1.5 µF	MA___5E155ZAA																		
1.8 µF	MA___5E185ZAA																		
2.2 µF	MA___5E225ZAA																		
2.7 µF	MA___5E275ZAA																		
3.3 µF	MA___5E335ZAA																		
3.9 µF	MA___5E395ZAA																		
4.7 µF	MA___5E475ZAA																		
5.6 µF	MA___5E565ZAA																		
6.8 µF	MA___5E685ZAA																		
8.2 µF	MA___5E825ZAA																		

For other tolerances see Part No. Codes
For other voltages see Part No. Codes.
AVX Style

TAPE AND REEL

CLASS I / RS-296	
A.	5mm ± 0.5mm (.200" ± 0.020")
B*.	52.4mm ± 1.5mm (2.063" ± 0.059")
C.	6.35mm ± 0.4mm (0.250" ± 0.016")
D^1-D^2.	1.4mm (0.055" MAX.)
E.	1.2mm (0.047" MAX.)
F.	1.6mm (0.063" MAX.)
G.	356mm (14.00")
H.	76mm (3.000")
I.	25.4mm (1.000")
J.	84mm (3.300")
K.	70mm (2.750")

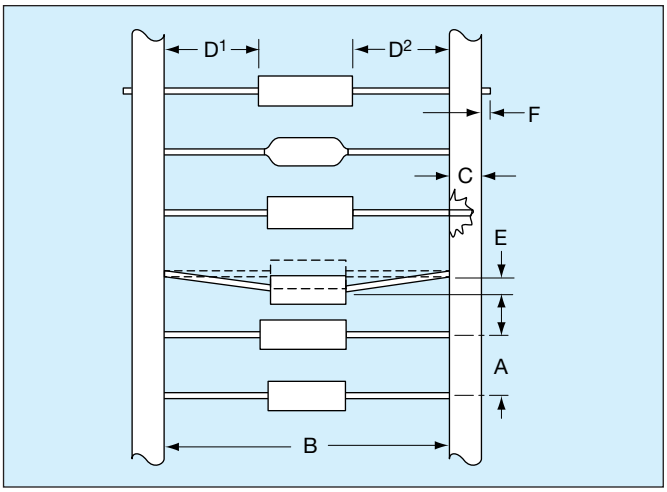

Leader Tape: 300mm min. (12")
Splicing: Tape Only
Missing Parts: 0.25% of component count max.-
No consecutive missing parts

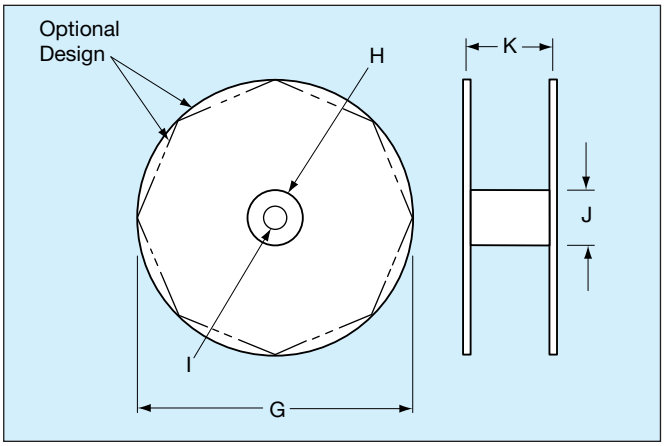

REEL QUANTITIES (MAX.) ‡

SA05	7,500 pcs.	MA10	5,000 pcs.
SA10	7,500 pcs.	MA20	5,000 pcs.
SA11	5,000 pcs.	MA30	3,000 pcs.
SA20	5,000 pcs.	MA40	3,000 pcs.
SA30	5,000 pcs.	MA50	950 pcs.
SA40	5,000 pcs.	MA60	650 pcs.

‡ 1000 pc. reels available for distribution pack only in ±1% and ±2% tolerance.

* Standard Tape Spacing Shown. Also available in 26.0mm + 1.5mm, – 0mm, (1.023 in. + .059 in. -0 in.) for SpinGuards only. EIA Class I, II and III tape spacings are available for molded axials. Tape spacing for Class II is 63.5mm ± 1.5mm (2.50 in ± .059 in), and for Class III 73mm ± 1.5mm (2.87 in ± .059 in)

ADDITIONAL PACKAGING AVAILABLE

AMMO PACK

Tape Spacing	SA05, SA10 SA20	SA11 SA30	SA40	BOX SIZES (Nominal)		
				L	W	H
52.4mm ± 1.5mm (2.062" ± .059")	4,000 pcs.	2000	2,000 pcs.	255mm (10.039")	73mm (2.874")	93mm (3.661")
26.0mm + 1.5mm - 0mm (1.023" + .059" - 0")	4,000 pcs.*	2000	2,000 pcs.*	255mm (10.039")	48mm (1.889")	113mm (4.448")

*SpinGuard only

BULK PACK (MOLDED AXIALS ONLY)

MA10 MA20 MA30 MA40	100 pcs. (bag)
MA50 MA60	50 pcs. (bag)

Mouser Electronics

Authorized Distributor

Click to View Pricing, Inventory, Delivery & Lifecycle Information:

AVX:

MA205A152JAA MA105E473ZAA MA401C104KAA MA405A103JAA MA605A104FAA MA405A103FAA MA101A181JAA MA101A271JAA MA302C103KAA MA502E154MAATR1 MA605A104GAA MA101A101JAA-BULK MA205E104MAA MA401C104KAA-BULK MA205C473MAA MA101A1R0CAA MA101A1R5DAA MA101A1R5DAAAP1 MA101A100JAA MA101A2R2CAA MA101A200JAA MA101A220JAA MA101A220KAA MA101A220KAC MA101A220MAA MA101A251JAA MA101A270KAA MA101A271KAA MA101A3R3CAA MA101A300JAA MA101A300KAA MA101A301MAA-BULK MA101A330JAA-BULK MA101A330KAA MA101A331KAA MA101A471FAA-BULK MA101A471JAA MA101A471JAA-BULK MA101A5R0DAA MA101A510JAA MA101A560JAA MA101A620JAA MA101A680JAA MA101A681JAA MA101A681KAA MA101A8R2DAA-BULK MA101A821JAA MA101C102MAA MA101C103KAA MA101C103KAA-BULK MA101C122KAA-BULK MA101C391KAA MA101C561KAA MA101C681KAA MA101C681MAA MA101C821KAA MA101E102MAA MA102A101JAA MA102A3R3DAA MA102A4R7DAA MA102A6R8DAA MA102C271KAA MA105A100JAA MA105A101FAA MA105A102FAA MA105A102JAA MA105A220JAA MA105A221KAA MA105A330FAA MA105A330KAA MA105A391JAA MA105A471FAA MA105A681FAA MA105C102JAA MA105C102KAA MA105C103KAA MA105C103MAA MA105C152KAA MA105C153JAA MA105C222MAA MA105C223KAA MA105C223MAA MA105E103MAA MA105E103ZAA MA105E563MAA MA107A1R0CAA MA201A102GAA MA201A102JAA MA201A102KAA MA201A152GAA MA201C103KAA MA201C103KAA-BULK MA201C122JAA MA201C152KAA MA201C821KAA-BULK MA205A152FAA-BULK MA205A152JAA-BULK MA205A182FAA MA205A561KAA MA205C223KAA