multicomp	PART NO. MC Series - Single Pole	REVISIONS								
		ECN #	REV	DESCRIPTION	DRAWN	DATE	CHECKD	DATE	APPRVD	DATE
		-	A	RELEASED	S. R	8/5/06	K. S	8/5/06	N. K	22/5/06

40 Series Single pole

MC33428-001-11

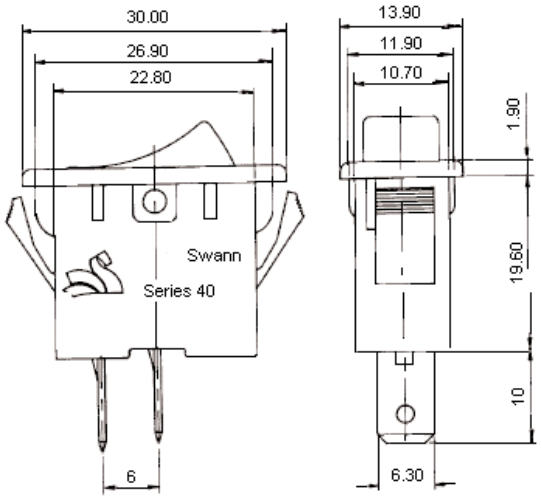

Dimensions : Millimetres

Features:

- Standard single pole single throw of rocker switches.
- Standard single pole double throw rocker switch with centre off.

Specifications:

Recommended panel cut-out	: Thickness (mm)	Cut-out size (mm).
	1.0 (minimum)	27.3 x 12.2.
	3.0 (maximum)	27.5 x 12.2.
Terminal	: 6.35mm quick connect.	
Dielectric strength	: Up to 3.5kV ac.	
Operating temperature	: 0°C to +85°C.	

Technical Data:

Rating	: CSA	: 15A, 125V ac.
		8A, 250V ac.
		6A, 28V dc.
	VDE	: 10(4)A, 250V ac.
Contact resistance	: 20mΩ.	
Insulation resistance	: >50MΩ.	
Mechanical endurance	: >100,000 cycles.	
Circuit	: SPST.	

This data sheet and its contents (the "Information") belong to the Premier Farnell Group (the "Group") or are licensed to it. No licence is granted for the use of it other than for information purposes in connection with the products to which it relates. No licence of any intellectual property rights is granted. The Information is subject to change without notice and replaces all data sheets previously supplied. The Information supplied is believed to be accurate but the Group assumes no responsibility for its accuracy or completeness, any error in or omission from it or for any use made of it. Users of this data sheet should check for themselves the Information and the suitability of the products for their purpose and not make any assumptions based on information included or omitted. Liability for loss or damage resulting from any reliance on the Information or use of it (including liability resulting from negligence or where the Group was aware of the possibility of such loss or damage arising) is excluded. This will not operate to limit or restrict the Group's liability for death or personal injury resulting from its negligence. MULTICOMP is the registered trademark of the Group. © Premier Farnell plc 2004.

TOLERANCES:

UNLESS OTHERWISE SPECIFIED, DIMENSIONS ARE FOR REFERENCE PURPOSES ONLY.

DRAWN BY:	DATE:
S. Ram	08/05/06
CHECKED BY:	DATE:
K. Suresh	08/05/06
APPROVED BY:	DATE:
N. Kiwomya	22/05/06

DRAWING TITLE: MC33428-001-11 , MC33412-041-11 - Rocker Switches

SIZE	DWG NO.	ELECTRONIC FILE	REV
A	M10000231	213293_1_DWG	A

SCALE: NTS | U.O.M.: mm | SHEET: 1 OF 2

Downloaded from Elcodis.com electronic components distributor

multicomp	PART NO. MC Series - Single Pole	REVISIONS								
		ECN #	REV	DESCRIPTION	DRAWN	DATE	CHECKD	DATE	APPRVD	DATE
		-	A	RELEASED	S. R	8/5/06	K. S	8/5/06	N. K	22/5/06

MC33412-041-11

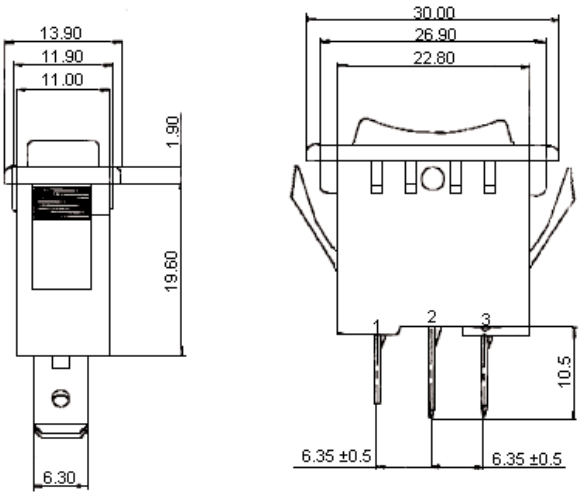

Dimensions : Millimetres

Technical Data:

Ratings	: 12A 125V ac. 6A 250V ac.
Circuit	: ON-OFF-ON.
Endurance	: Life at full load >20,000 cycles.
Contact resistance	: 20mΩ.
Insulation resistance	: >50MΩ (500V dc between the open contacts).
Glow wire Test	: 850°C (category D).
Resistance to tracking	: PTI 250.

Specification Table

Type	Bezel	Depth	Tabs	Part Number
SPST	30 x 13.9	29.6	6.3	MC33428-001-11
SPDT centre off				MC33412-041-11

Dimensions : Millimetres

This data sheet and its contents (the "Information") belong to the Premier Farnell Group (the "Group") or are licensed to it. No licence is granted for the use of it other than for information purposes in connection with the products to which it relates. No licence of any intellectual property rights is granted. The Information is subject to change without notice and replaces all data sheets previously supplied. The Information supplied is believed to be accurate but the Group assumes no responsibility for its accuracy or completeness, any error in or omission from it or for any use made of it. Users of this data sheet should check for themselves the Information and the suitability of the products for their purpose and not make any assumptions based on information included or omitted. Liability for loss or damage resulting from any reliance on the Information or use of it (including liability resulting from negligence or where the Group was aware of the possibility of such loss or damage arising) is excluded. This will not operate to limit or restrict the Group's liability for death or personal injury resulting from its negligence. MULTICOMP is the registered trademark of the Group. © Premier Farnell plc 2004.

TOLERANCES:

UNLESS OTHERWISE SPECIFIED, DIMENSIONS ARE FOR REFERENCE PURPOSES ONLY.

DRAWN BY:	DATE:
S. Ram	08/05/06
CHECKED BY:	DATE:
K. Suresh	08/05/06
APPROVED BY:	DATE:
N. Kiwomya	22/05/06

DRAWING TITLE: MC33428-001-11 , MC33412-041-11 - Rocker Switches

SIZE	DWG NO.	ELECTRONIC FILE	REV
A	M10000231	213293_1_DWG	A

SCALE: NTS | U.O.M.: mm | SHEET: 1 OF 2

Downloaded from Elcodis.com electronic components distributor

multicomp	PART NO. MC Series - Single Pole	REVISIONS								
		ECN #	REV	DESCRIPTION	DRAWN	DATE	CHECKD	DATE	APPRVD	DATE
		-	A	RELEASED	S. R	8/5/06	K. S	8/5/06	N. K	22/5/06

Notes:

International Sales Offices:

AUSTRALIA – Farnell InOne
Tel No: ++ 61 2 9645 8888
Fax No: ++ 61 2 9644 7898

AUSTRIA – Farnell InOne
Tel No: ++ 43 662 2180 680
Fax No: ++ 43 662 2180 670

BELGIUM – Farnell InOne
Tel No: ++ 32 3 475 2810
Fax No: ++ 32 3 227 3648

BRAZIL – Farnell-Newark InOne
Tel No: ++ 55 11 4066 9400
Fax No: ++ 55 11 4066 9410

CHINA – Farnell-Newark InOne
Tel No: ++86 10 6238 5152
Fax No: ++86 10 6238 5022

DENMARK – Farnell InOne
Tel No: ++ 45 44 53 66 44
Fax No: ++ 45 44 53 66 06

ESTONIA – Farnell InOne
Tel No: ++ 358 9 560 7780
Fax No: ++ 358 9 345 5411

FINLAND – Farnell InOne
Tel No: ++ 358 9 560 7780
Fax No: ++ 358 9 345 5411

FRANCE – Farnell InOne
Tel No: ++ 33 474 68 99 99
Fax No: ++ 33 474 68 99 90

GERMANY – Farnell InOne
Tel No: ++ 49 89 61 39 39 39
Fax No: ++ 49 89 613 59 01

HONG KONG – Farnell-Newark InOne
Tel No: ++ 852 2268 9888
Fax No: ++ 852 2268 9899

IRELAND – Farnell InOne
Tel No: ++ 353 1 830 9277
Fax No: ++ 353 1 830 9016

ITALY – Farnell InOne
Tel No: ++ 39 02 93 995 200
Fax No: ++ 39 02 93 995 300

MALAYSIA – Farnell-Newark InOne
Tel No: ++ 60 3 7873 8000
Fax No: ++ 60 3 7873 7000

NETHERLANDS – Farnell InOne
Tel No: ++ 31 30 241 7373
Fax No: ++ 31 30 241 7333

NEW ZEALAND – Farnell InOne
Tel No: ++ 64 9 357 0646
Fax No: ++ 64 9 357 0656

NORWAY – Farnell InOne
Tel No: ++ 45 44 53 66 66
Fax No: ++ 45 44 53 66 02

PORTUGAL – Farnell InOne
Tel No: ++ 34 93 475 8804
Fax No: ++ 34 93 474 5288

SINGAPORE – Farnell-Newark InOne
Tel No: ++ 65 6788 0200
Fax No: ++ 65 6788 0300

SPAIN – Farnell InOne
Tel No: ++ 34 93 475 8805
Fax No: ++ 34 93 474 5107

SWEDEN – Farnell InOne
Tel No: ++ 46 8 730 50 00
Fax No: ++ 46 8 83 52 62

SWITZERLAND – Farnell InOne
Tel No: ++ 41 1 204 64 64
Fax No: ++ 41 1 204 64 54

UK – Farnell InOne
Tel No: ++ 44 8701 200 200
Fax No: ++ 44 8701 200 201

UK – BuckHickman InOne
++ 44 8450 510 150
++ 44 8450 510 130

UK – CPC
++ 44 8701 202 530
++ 44 8701 202 531

export
EXPORT – Farnell InOne
Tel No: ++ 44 8701 200 208
Fax No: ++ 44 8701 200 209
For enquiries from all other markets

http://www.farnellinone.com
http://www.buckhickmaninone.com
http://www.cpc.co.uk

This data sheet and its contents (the "Information") belong to the Premier Farnell Group (the "Group") or are licensed to it. No licence is granted for the use of it other than for information purposes in connection with the products to which it relates. No licence of any intellectual property rights is granted. The Information is subject to change without notice and replaces all data sheets previously supplied. The Information supplied is believed to be accurate but the Group assumes no responsibility for its accuracy or completeness, any error in or omission from it or for any use made of it. Users of this data sheet should check for themselves the Information and the suitability of the products for their purpose and not make any assumptions based on information included or omitted. Liability for loss or damage resulting from any reliance on the Information or use of it (including liability resulting from negligence or where the Group was aware of the possibility of such loss or damage arising) is excluded. This will not operate to limit or restrict the Group's liability for death or personal injury resulting from its negligence. MULTICOMP is the registered trademark of the Group. © Premier Farnell plc 2004.

TOLERANCES:

UNLESS OTHERWISE SPECIFIED, DIMENSIONS ARE FOR REFERENCE PURPOSES ONLY.

DRAWN BY:	DATE:
S. Ram	08/05/06
CHECKED BY:	DATE:
K. Suresh	08/05/06
APPROVED BY:	DATE:
N. Kiwomya	22/05/06

DRAWING TITLE:
MC33428-001-11 , MC33412-041-11 - Rocker Switches

SIZE	DWG NO.	ELECTRONIC FILE	REV
A	M10000231	213293_1_DWG	A

SCALE: NTS | U.O.M.: mm | SHEET: 2 OF 2

Downloaded from Elcodis.com electronic components distributor