Midas Components Limited
Electra House
32 Southtown Road
Great Yarmouth
Norfolk
NR31 0DU
England

Telephone +44 (0)1493 602602
Fax +44 (0)1493 665111
Email sales@midasdisplays.com
Website www.midasdisplays.com

Specification

Part Number:	MCOB42005A1V-EBP
Version:	1
Date:	2015/09/16

DATE	VERSION	REVISED PAGE NO.	Note
2013/03/18	1		First issue

Key Attributes	Display Accessories
Alphanumeric OLED 20 x 4 Blue on Black 3V to 5V Parallel Interface English/Euro/Cyrillic/Japanese 4.75mm Character Height 98.0 x 60.0 mm -40 ~ +80 deg C COB	MCCMDB-16SIL-KIT MCCBL1A16SILP-16DILS-150 MCCBL1A16SILP-16SILS-150 MCCBL1A14SILP-14SILS-150 MCRS232A MCRS232B

Contents

No.	Item	Page
1.	Revision History	4
2.	General Specification	4
3.	Module Coding System	5
4.	Interface Pin Function	6
5.	Outline Dimension	7
6.	Absolute Maximum Ratings	9
7.	Electrical Characteristics	9
8.	Optical Characteristics	10
9.	OLED Lifetime	10
10.	Reliability	11
11.	Inspection specification	13
12.	Precautions in use of Modules	20

MIDAS
design • manufacture • supply

2. General Specification

The Features is described as follow:

- Module dimension: 98.0 x 60.0 x 10.0 (max.) mm^3
- View area: 77.0 x 25.2 mm^2
- Active area: 70.16 x 20.95 mm^2
- Number of dots: 20 characters x 4 Lines
- Pixel size: 0.54 x 0.55 mm^2
- Pixel pitch: 0.59x 0.60mm2
- Character size: 2.9 x 4.75 mm2
- Character pitch: 3.54 x 5.4 mm2
- Duty: 1/16
- Emitting Color: OLED , Blue

MIDAS
design • manufacture • supply

Midas Displays OLED Part Number System

MCO	B	21605	A	*	V	-	E	W	I	*
1	**2**	**3**	**4**	**5**	**6**		7	8	9	10

1	=	**MCO:**	Midas Displays OLED
2	=	**Blank:**	**B**: COB (Chip on Board) **T**: TAB (Taped Automated Bonding)
3	=	**No of dots:**	**(**e.g. 240064 = 240 x 64 dots) (e.g. 21605 = 2 x 16 5mm C.H.)
4	=	**Series**	A to Z
5	=	**Series Variant:**	A to Z and 1 to 9 **– see addendum**
6	=	**Operating Temp Range:**	**A:** -30+85° C **V:** -40+80° C **Y:** -40 +70° C **Z:** -30+70° C **X**: -40 +85° C
7	=	**Character Set:**	**Blank**: Not Applicable **E:** Multi European Font Set (English/Japanese – Western European (K) – Cyrillic (R))
8	=	**Colour:**	**Y:** Yellow **W:** White **B:** Blue **R:** Red **G:** Green **RGB**: Full Colour
9	=	**Interface:**	**P:** Parallel **I:** I²C **S:** SPI **M:** Multi
10	=	**Voltage Variant:**	e.g. **3** = 3v

MIDAS
design • manufacture • supply

4. Interface Pin Function

Pin No.	Symbol	Level	Description
1	VSS	0V	Ground
2	VDD	5.0V	Supply Voltage for logic
3	NC	—	
4	RS	H/L	H: DATA, L: Instruction code
5	R/W	H/L	H: Read(MPU→Module) L: Write(MPU→Module)
6	E	H,H→L	Chip enable signal
7	DB0	H/L	Data bit 0
8	DB1	H/L	Data bit 1
9	DB2	H/L	Data bit 2
10	DB3	H/L	Data bit 3
11	DB4	H/L	Data bit 4
12	DB5	H/L	Data bit 5
13	DB6	H/L	Data bit 6
14	DB7	H/L	Data bit 7
15	NC	—	
16	NC	—	

MIDAS
design • manufacture • supply

5. Outline Dimension

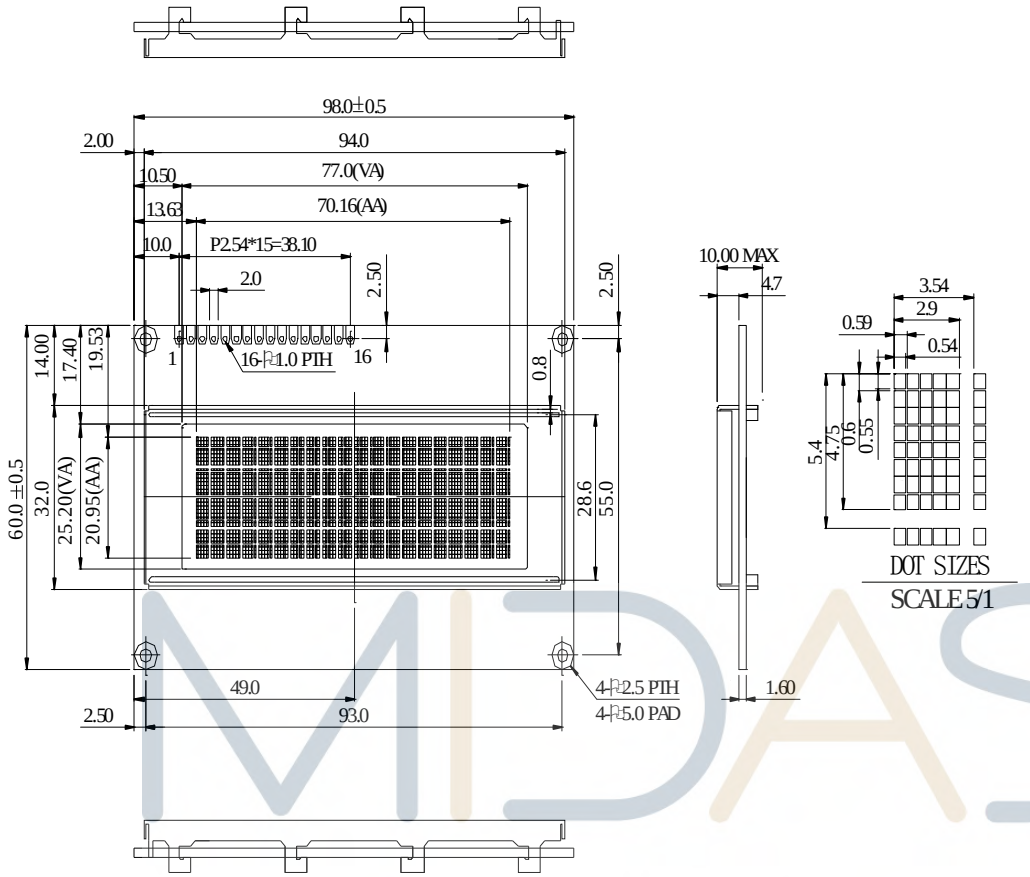

PIN NO.	SYMBOL
1	Vss
2	Vdd
3	NC
4	RS
5	R/$\overline{W}$
6	E
7	DB0
8	DB1
9	DB2
10	DB3
11	DB4
12	DB5
13	DB6
14	DB7
15	NC
16	NC

MIDAS
design • manufacture • supply

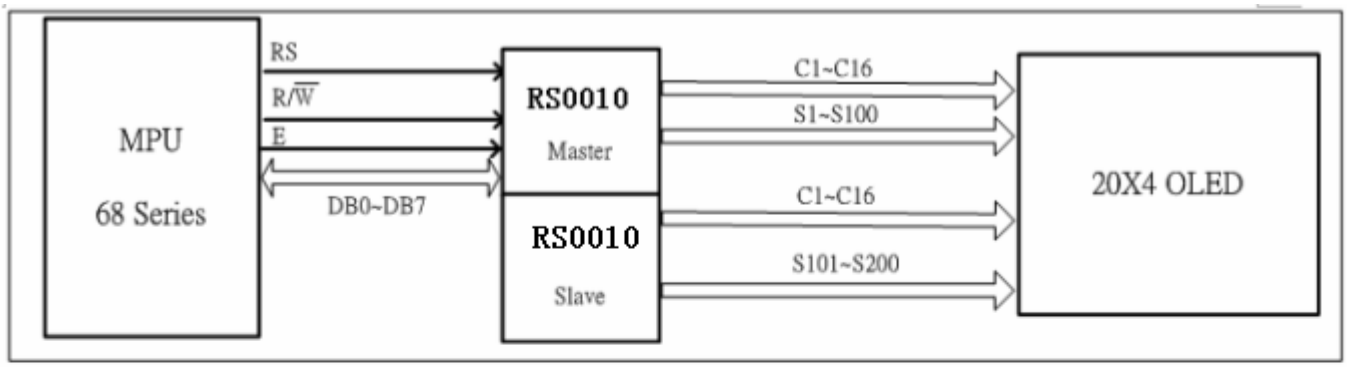

Address Format	DB7	DB6	DB5	DB4	DB3	DB2	DB1	DB0
CA (Character Address)	1	ADD6	ADD5	ADD4	ADD3	ADD2	ADD1	ADD0

Display Position	1	2	3	4	……	……	17	18	19	20
DD RAM Address	00	01	02	03	……	……	10	11	12	13
DD RAM Address	40	41	42	43	……	……	50	51	52	53
DD RAM Address	14	15	16	17	……	……	24	25	26	27
DD RAM Address	54	55	56	57	……	……	64	65	66	67

MIDAS
design • manufacture • supply

6. Absolute Maximum Ratings

Item	Symbol	Min	Max	Unit	Notes
Operating Temperature	T_{OP}	-40	+80	℃	
Storage Temperature	T_{ST}	-40	+80	℃	
Input Voltage	V_I	-0.3	VDD	V	
Supply Voltage For Logic	VDD-V_{SS}	-0.3	5.3	V	

7. Electrical Characteristics

Item	Symbol	Condition	Min	Typ	Max	Unit
Supply Voltage For Logic	VDD-VSS	—	3.0	5.0	5.3	V
Input High Volt.	VIH	—	0.9 VDD	—	VDD	V
Input Low Volt.	VIL	—	GND	—	0.1VDD	V
Output High Volt.	VOH	IOH=-0.5mA	0.8 VDD	—	VDD	V
Output Low Volt.	VOL	IOL=0.5mA	GND	—	0.2 VDD	V
Supply Current	IDD	VDD=5V	—	60	—	mA
CIEx(Blue)		x,y(CIE1931)	0.12	0.16	0.20	
CIEy(Blue)		x,y(CIE1931)	0.19	0.23	0.27	

MIDAS
design • manufacture • supply

8. Optical Characteristics

Item	Symbol	Condition	Min	Typ	Max	Unit
View Angle	(V)θ		160			deg
	(H)φ		160			deg
Contrast Ratio	CR	Dark	2000:1		—	—
Response Time	T rise	—		10		μs
	T fall	—		10		μs
Supply Voltage For Logic 5V 50% Check Board Brightness		With polarizer 300mW(5V*60mA)		40		Nits Note1
Supply Voltage For Logic 3V 50% Check Board Brightness		With polarizer		15		nits

Notes: 1.When random texts pattern is running , averagely , at any instance , about 1/2 of pixels will be on.

2. You can to use the display off mode to make long life.

MIDAS
design • manufacture • supply

9. OLED Lifetime

ITEM	Conditions	Typ	Remark
Operating Life Time	Ta=25℃ /Initial 50% checkboard brightness 40nits	50,000 Hrs	Note

Notes:

1. Simulation pattern for operation test: interchanging with 50% checkboard.
   The brightness decay does not exceed 50%
2. You can use the display off mode to make long life.
3. The average operating lifetime at room temperature is estimated by the accelerated operation at high temperature conditions.

10. Reliability

Content of Reliability Test

Environmental Test			
Test Item	**Content of Test**	**Test Condition**	**Applicable Standard**
High Temperature storage	Endurance test applying the high storage temperature for a long time.	80℃ 240hrs	——
High Temperature Operation	Endurance test applying the electric stress (Voltage & Current) and the thermal stress to the element for a long time.	80℃ 240hrs	——
Low Temperature Operation	Endurance test applying the electric stress under low temperature for a long time.	-40℃ 240hrs	——
High Temperature/ Humidity Storage	Endurance test applying the high temperature and high humidity storage for a long time.	60℃,90%RH 240hrs	——
Temperature Cycle	Endurance test applying the low and high temperature cycle. -40℃ 25℃ 80℃ 30min 5min 30min 1 cycle	-40℃/80℃ 100 cycles	——
Mechanical Test			
Vibration test	Endurance test applying the vibration during transportation and using.	10~22Hz→1.5mmp-p 22~500Hz→1.5G Total 0.5hrs	——
Shock test	Constructional and mechanical endurance test applying the shock during transportation.	50G Half sign wave 11 msedc 3 times of each direction	——
Atmospheric pressure test	Endurance test applying the atmospheric pressure during transportation by air.	115mbar 40hrs	——
Others			
Static electricity test	Endurance test applying the electric stress to the terminal.	VS=800V,RS=1.5kΩ CS=100pF 1 time	——

***Supply voltage for logic system=5V. Supply voltage for OLED system =Operating voltage at 25℃

MIDAS
design • manufacture • supply

Test and measurement conditions

1. All measurements shall not be started until the specimens attain to temperature stability. After the completion of the described reliability test, the samples were left at room temperature for 2 hrs prior to conducting the failure test at 23±5°C; 55±15% RH.
2. All-pixels-on is used as operation test pattern.
3. The degradation of Polarizer are ignored for High Temperature storage, High Temperature/Humidity Storage, Temperature Cycle

Evaluation criteria

1. The function test is OK.
2. No observable defects.
3. Luminance: > 50% of initial value.
4. Current consumption: within ± 50% of initial value.

APPENDIX:

RESIDUE IMAGE

Because the pixels are lighted in different time, the luminance of active pixels may reduce or differ from inactive pixels. Therefore, the residue image will occur. To avoid the residue image, every pixel needs to be lighted up uniformly.

MIDAS
design • manufacture • supply

11. Inspection specification

<table>
<tr><th>NO</th><th>Item</th><th>Criterion</th><th>AQL</th></tr>
<tr><td>01</td><td>Electrical Testing</td><td>1.1 Missing vertical, horizontal segment, segment contrast defect.
1.2 Missing character, dot or icon.
1.3 Display malfunction.
1.4 No function or no display.
1.5 Current consumption exceeds product specifications.
1.6 Viewing angle defect.
1.7 Mixed product types.
1.8 Contrast defect.</td><td>0.65</td></tr>
<tr><td>02</td><td>Black or bright spots on OLED (display only)</td><td>2.1 Bright and black spots on display ≦0.25mm, no more than three Bright or black spots present.
2.2 Densely spaced: No more than two spots or lines within 3mm</td><td>2.5</td></tr>
<tr><td rowspan="2">03</td><td rowspan="2">Black spots, bright spots, contamination (non-display)</td><td>3.1 Round type : As following drawing
Φ=(x + y) / 2</td><td>2.5</td></tr>
<tr><td>3.2 Line type : (As following drawing)
 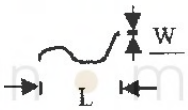

<table>
<tr><th>Length</th><th>Width</th><th>Acceptable Q TY</th></tr>
<tr><td>---</td><td>W≦0.02</td><td>Accept no dense</td></tr>
<tr><td>L≦3.0</td><td>0.02＜W≦0.03</td><td rowspan="2">2</td></tr>
<tr><td>L≦2.5</td><td>0.03＜W≦0.05</td></tr>
<tr><td>---</td><td>0.05＜W</td><td>As round type</td></tr>
</table></td><td>2.5</td></tr>
<tr><td>04</td><td>Polarizer bubbles</td><td>If bubbles are visible, judge using black spot specifications, not easy to find, must check in specify direction.
<table>
<tr><th>Size Φ</th><th>Acceptable Q TY</th></tr>
<tr><td>Φ≦0.20</td><td>Accept no dense</td></tr>
<tr><td>0.20＜Φ≦0.50</td><td>3</td></tr>
<tr><td>0.50＜Φ≦1.00</td><td>2</td></tr>
<tr><td>1.00＜Φ</td><td>0</td></tr>
<tr><td>Total Q TY</td><td>3</td></tr>
</table></td><td>2.5</td></tr>
</table>

MIDAS
design · manufacture · supply

<table>
<tr><th>NO</th><th>Item</th><th>Criterion</th><th>AQL</th></tr>
<tr><td>05</td><td>Scratches</td><td>Follow NO.3 black spots, bright spots, contamination</td><td></td></tr>
<tr><td>06</td><td>Chipped glass</td><td>
Symbols Define:
x: Chip length y: Chip width z: Chip thickness
k: Seal width t: Glass thickness a: OLED side length
L: Electrode pad length:

6.1 General glass chip :
6.1.1 Chip on panel surface and crack between panels:
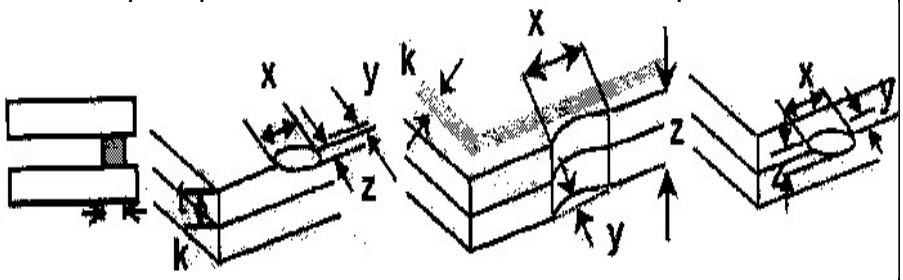

<table>
<tr><td>z: Chip thickness</td><td>y: Chip width</td><td>x: Chip length</td></tr>
<tr><td>Z≦1/2t</td><td>Not over viewing area</td><td>x≦1/8a</td></tr>
<tr><td>1/2t＜z≦2t</td><td>Not exceed 1/3k</td><td>x≦1/8a</td></tr>
</table>
⊙If there are 2 or more chips, x is total length of each chip.

6.1.2 Corner crack:
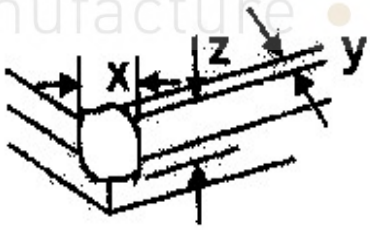

<table>
<tr><td>z: Chip thickness</td><td>y: Chip width</td><td>x: Chip length</td></tr>
<tr><td>Z≦1/2t</td><td>Not over viewing area</td><td>x≦1/8a</td></tr>
<tr><td>1/2t＜z≦2t</td><td>Not exceed 1/3k</td><td>x≦1/8a</td></tr>
</table>
⊙If there are 2 or more chips, x is the total length of each chip.
</td><td>2.5</td></tr>
</table>

MIDAS
design • manufacture • supply

<table>
<tr><th>NO</th><th>Item</th><th>Criterion</th><th>AQL</th></tr>
<tr><td>06</td><td>Glass crack</td><td>
Symbols :
x: Chip length y: Chip width z: Chip thickness
k: Seal width t: Glass thickness a: OLED side length
L: Electrode pad length
6.2 Protrusion over terminal :
6.2.1 Chip on electrode pad :
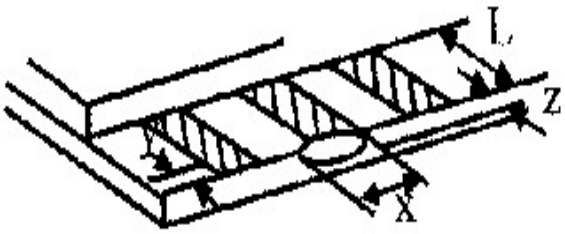

<table>
<tr><td>y: Chip width</td><td>x: Chip length</td><td>z: Chip thickness</td></tr>
<tr><td>y≦0.5mm</td><td>x≦1/8a</td><td>0 ＜ z ≦ t</td></tr>
</table>
6.2.2 Non-conductive portion:

<table>
<tr><td>y: Chip width</td><td>x: Chip length</td><td>z: Chip thickness</td></tr>
<tr><td>y≦ L</td><td>x≦1/8a</td><td>0 ＜ z ≦ t</td></tr>
</table>
⊙If the chipped area touches the ITO terminal, over 2/3 of the ITO must remain and be inspected according to electrode terminal specifications.
⊙If the product will be heat sealed by the customer, the alignment mark not be damaged.
6.2.3 Substrate protuberance and internal crack.
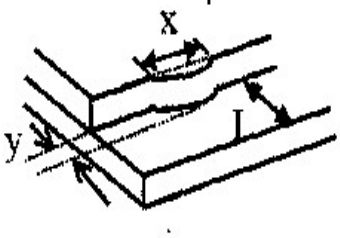

<table>
<tr><td>y: width</td><td>x: length</td></tr>
<tr><td>y≦1/3L</td><td>x ≦ a</td></tr>
</table>
</td><td>2.5</td></tr>
</table>

MIDAS
design • manufacture • supply

NO	Item	Criterion	AQL
07	Cracked glass	The OLED with extensive crack is not acceptable.	2.5
08	Bezel	8.1 Bezel may not have rust, be deformed or have fingerprints, stains or other contamination. 8.2 Bezel must comply with job specifications.	2.5 0.65
9	PCB、COB	9.1 COB seal may not have pinholes larger than 0.2mm or contamination. 9.2 COB seal surface may not have pinholes through to the IC. 9.3 The height of the COB should not exceed the height indicated in the assembly diagram. 9.4 There may not be more than 2mm of sealant outside the seal area on the PCB. And there should be no more than three places. 9.5 No oxidation or contamination PCB terminals. 9.6 Parts on PCB must be the same as on the production characteristic chart. There should be no wrong parts, missing parts or excess parts. 9.7 The jumper on the PCB should conform to the product characteristic chart. 9.8 If solder gets on bezel tab pads, zebra pad or screw hold pad, make sure it is smoothed down. 9.9 The Scraping testing standard for Copper Coating of PCB 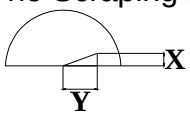 **X * Y<=2mm^2**	2.5 2.5 0.65 2.5 2.5 0.65 0.65 2.5 2.5
10	Soldering	10.1 No un-melted solder paste may be present on the PCB. 10.2 No cold solder joints, missing solder connections, oxidation or icicle. 10.3 No residue or solder balls on PCB. 10.4 No short circuits in components on PCB.	2.5 2.5 2.5 0.65

MIDAS design · manufacture · supply

NO	Item	Criterion	AQL
11	General appearance	11.1 No oxidation, contamination, curves or, bends on interface Pin (OLB) of TCP. 11.2 No cracks on interface pin (OLB) of TCP. 11.3 No contamination, solder residue or solder balls on product. 11.4 The IC on the TCP may not be damaged, circuits. 11.5 The uppermost edge of the protective strip on the interface pin must be present or look as if it causes the interface pin to sever. 11.6 The residual rosin or tin oil of soldering (component or chip component) is not burned into brown or black color. 11.7 Sealant on top of the ITO circuit has not hardened. 11.8 Pin type must match type in specification sheet. 11.9 OLED pin loose or missing pins. 11.10 Product packaging must the same as specified on packaging specification sheet. 11.11 Product dimension and structure must conform to product specification sheet.	2.5 0.65 2.5 2.5 2.5 2.5 2.5 0.65 0.65 0.65 0.65

MIDAS
design • manufacture • supply

Standard：

Defect item	Sorting	Defect judgment
No Display	Major	
Dark crisscross line	Major	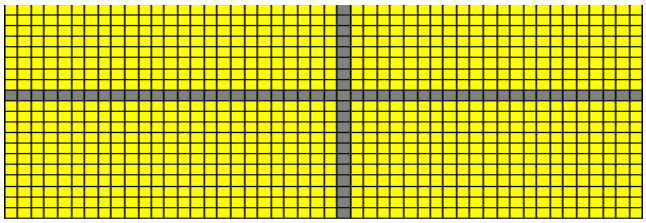
Short	Major	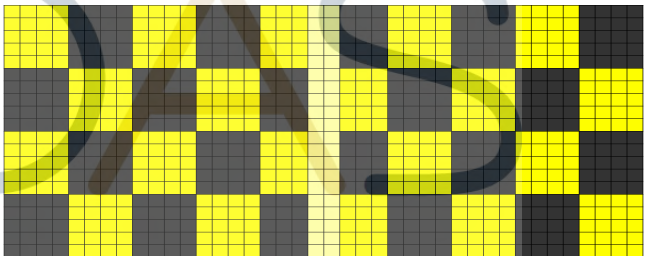
Miss line	Major	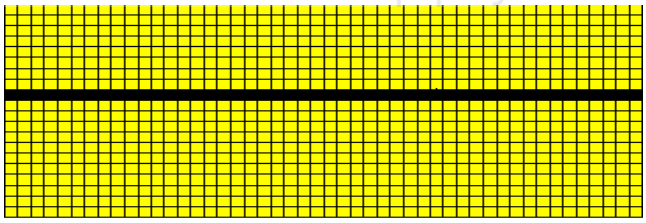
Wrong Display	Major	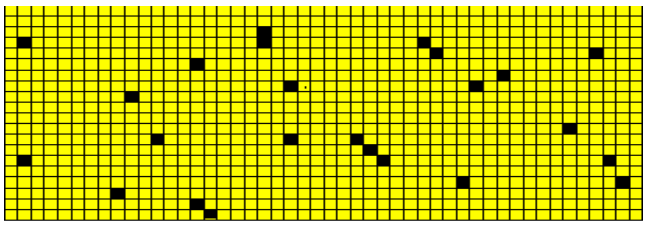

MIDAS
design • manufacture • supply

Display Uneven	Major	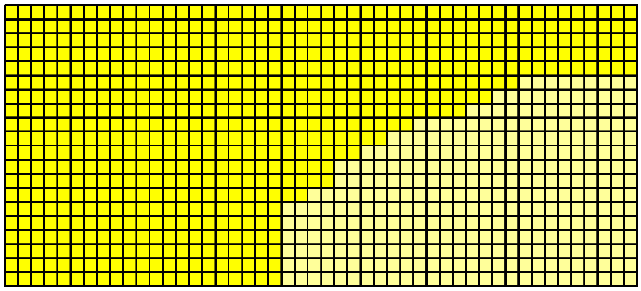
Dark dot and light line	Major	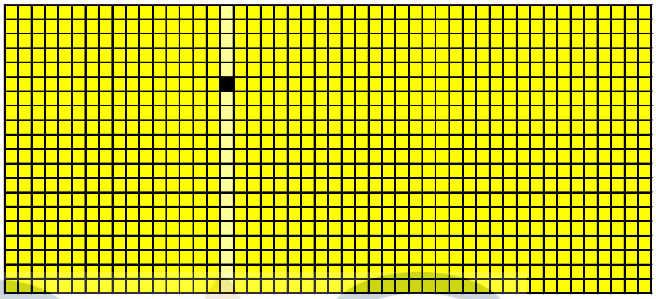

MIDAS
design • manufacture • supply

12. Precautions in use of Modules

1. Avoid applying excessive shocks to the module or making any alterations or modifications to it.
2. Don't make extra holes on the printed circuit board, modify its shape or change the components of OLED module.
3. Don't disassemble the OLED module.
4. Don't operate it above the absolute maximum rating.
5. Don't drop, bend or twist OLED module.
6. Soldering: only to the I/O terminals.
7. Storage: please storage in anti-static electricity container and clean environment.
8. Midas have the right to change the passive components (Resistors, capacitors and other passive components will have different appearance and color caused by the different supplier.)
9. Midas have the right to change the PCB Rev.

12.1 Handling Precautions

(1) Since the display panel is being made of glass, do not apply mechanical impacts such us dropping from a high position.

(2) If the display panel is broken by some accident and the internal organic substance leaks out, be careful not to inhale nor lick the organic substance.

(3) If pressure is applied to the display surface or its neighborhood of the OLED display module, the cell structure may be damaged and be careful not to apply pressure to these sections.

(4) The polarizer covering the surface of the OLED display module is soft and easily scratched. Please be careful when handling the OLED display module.

(5) When the surface of the polarizer of the OLED display module has soil, clean the surface. It takes advantage of by using following adhesion tape.

* Scotch Mending Tape No. 810 or an equivalent

Never try to breathe upon the soiled surface nor wipe the surface using cloth containing solvent

Also, pay attention that the following liquid and solvent may spoil the polarizer:

* Water
* Ketone
* Aromatic Solvents

(6) Hold OLED display module very carefully when placing OLED display module into the System housing. Do not apply excessive stress or pressure to OLED display module. And, do not over bend the film with electrode pattern layouts. These stresses will influence the display performance. Also, secure sufficient rigidity for the outer cases.

MIDAS
design • manufacture • supply

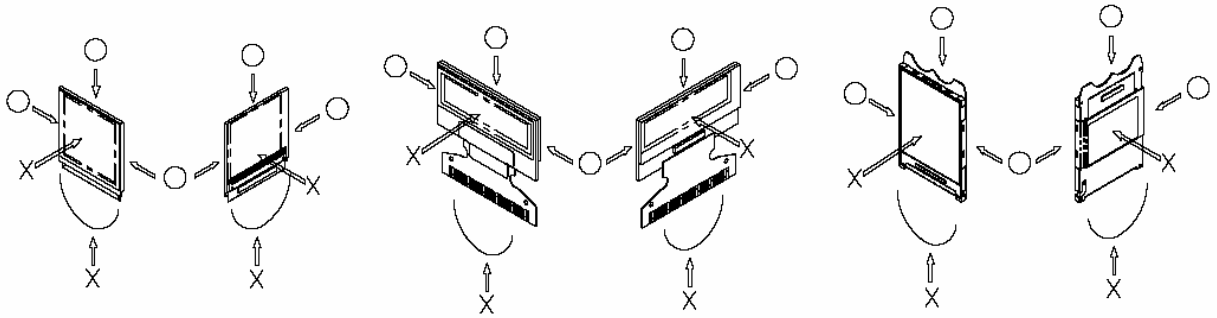

(7) Do not apply stress to the LSI chips and the surrounding molded sections.

(8) Do not disassemble nor modify the OLED display module.

(9) Do not apply input signals while the logic power is off.

(10) Pay sufficient attention to the working environments when handing OLED display modules to prevent occurrence of element breakage accidents by static electricity.

* Be sure to make human body grounding when handling OLED display modules.

* Be sure to ground tools to use or assembly such as soldering irons.

* To suppress generation of static electricity, avoid carrying out assembly work under dry environments.

* Protective film is being applied to the surface of the display panel of the OLED display module. Be careful since static electricity may be generated when exfoliating the protective film.

(11) Protection film is being applied to the surface of the display panel and removes the protection film before assembling it. At this time, if the OLED display module has been stored surface of the display panel after removed of the film. In such case, remove the residue material by the method introduced in the above Section 5.

(12) If electric current is applied when the OLED display module is being dewed or when it is placed under high humidity environments, the electrodes may be corroded and be careful to avoid the above.

12.2 Storage Precautions

(1) When storing OLED display modules, put them in static electricity preventive bags avoiding exposure to direct sun light nor to lights of fluorescent lamps. And, also, avoiding high temperature and high humidity environment or low temperature (less than 0℃) environments.(We recommend you to store these modules in the packaged state when they were shipped from Midas. At that time, be careful not to let water drops adhere to the packages or bags nor let dewing occur with them.

(2) If electric current is applied when water drops are adhering to the surface of the OLED display module, when the OLED display module is being dewed or when it is placed under high humidity environments, the electrodes may be corroded and be careful about the above.

MIDAS
design · manufacture · supply

12.3 Designing Precautions

(1) The absolute maximum ratings are the ratings which cannot be exceeded for OLED display module, and if these values are exceeded, panel damage may be happen.

(2) To prevent occurrence of malfunctioning by noise, pay attention to satisfy the VIL and VIH specifications and, at the same time, to make the signal line cable as short as possible.

(3) We recommend you to install excess current preventive unit (fuses, etc.) to the power circuit (VDD). (Recommend value: 0.5A)

(4) Pay sufficient attention to avoid occurrence of mutual noise interference with the neighboring devices.

(5) As for EMI, take necessary measures on the equipment side basically.

(6) When fastening the OLED display module, fasten the external plastic housing section.

(7) If power supply to the OLED display module is forcibly shut down by such errors as taking out the main battery while the OLED display panel is in operation, we cannot guarantee the quality of this OLED display module. Connection (contact) to any other potential than the above may lead to rupture of the IC.

MIDAS
design • manufacture • supply