図面番号(DRAWING NO.) SJ036111

版数 REV.	年月日 DATE	DCN NO.	変更内容 DESCRIPTION	製図 DR.	担当 CHK.	査閲 APPD.	承認 APPD.
2	5.Sep.2001	48684	ADDED ABRIDGED PART NUMER	———	Y.YAHIRO	———	K.SUZUKI
3	7.Nov.2001	49068	CHANGED FORM	———	Y.YAHIRO	———	K.SUZUKI
4	21.Dec.2001	49304	CHANGED FORM	———	Y.YAHIRO	S.KASHIWAGI	K.SUZUKI
5	20.Jun.2003	52342	ADDED TABLE2 (ADDED ITEM)	———	Y.YAHIRO	———	K.SUZUKI
6	19.Sep.2003	053326	ADDED TABLE3 (ADDED ITEM)	———	R.KATOU	Y.YAHIRO	S.KASHIWAGI
7	10.Feb.2006	059307	CORRECTION OF ERROR IN WRITTING	E.MURANO	Y.YAHIRO	——	K.Hisatomi

DESIGNATION

MM50-200B*-*R

- SERIES PREFIX / シリーズ名
- NO. OF CONTACTS / 芯数
- SOCKET TYPE / ソケットタイプ: B:LATCH TYPE SMT
- KEYING TYPE(DETAIL A) / キィタイプ: 2:TYPE B(1.8V), 1:TYPE A(2.5V)
- CONTACT FINISH / 接点仕上げ: 1:Au(0.1μm MIN) OVER NI, 2:Au(0.3μm MIN) OVER NI △6
- R :REVERSE / NONE:STANDARD

△6 TABLE2

CONTACT FINISH

PARTS NAME	CONTACT AREA	SOLDERING AREA
MM50-200B*-1R	Au(0.1μm Min.) OVER NI	GOLD FLASH OVER NI
MM50-200B*-2R	Au(0.3μm Min.) OVER NI	GOLD FLASH OVER NI

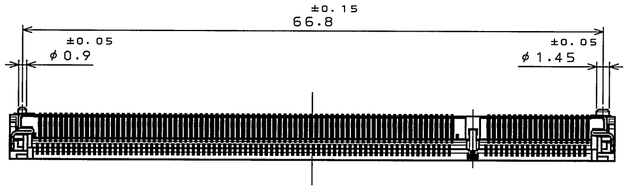

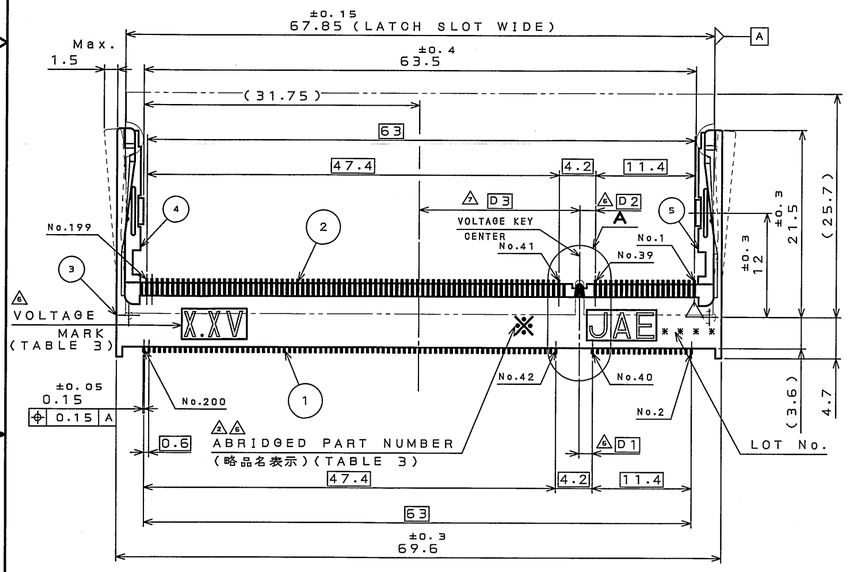

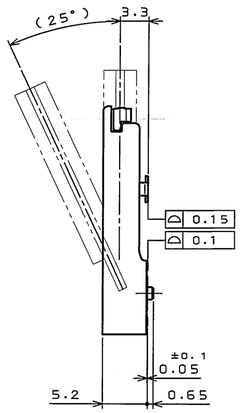

DETAIL A
(SCALE 5:1)
(REF.TABLE1)

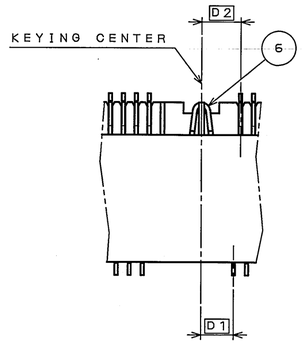

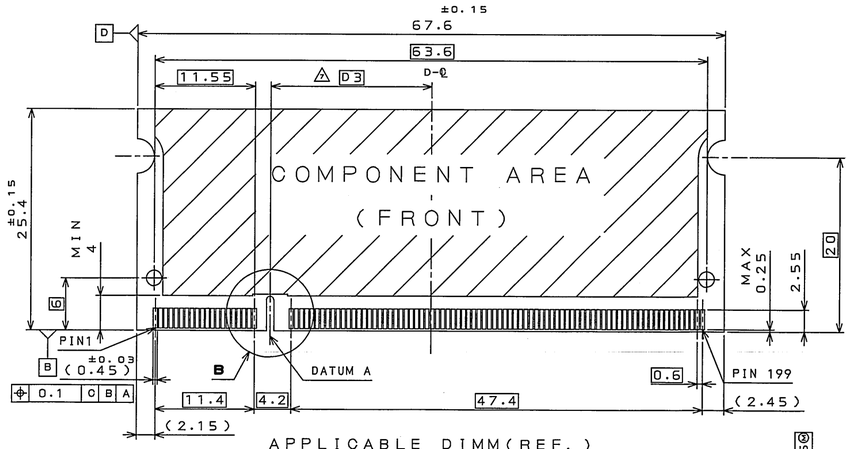

APPLICABLE DIMM(REF.)

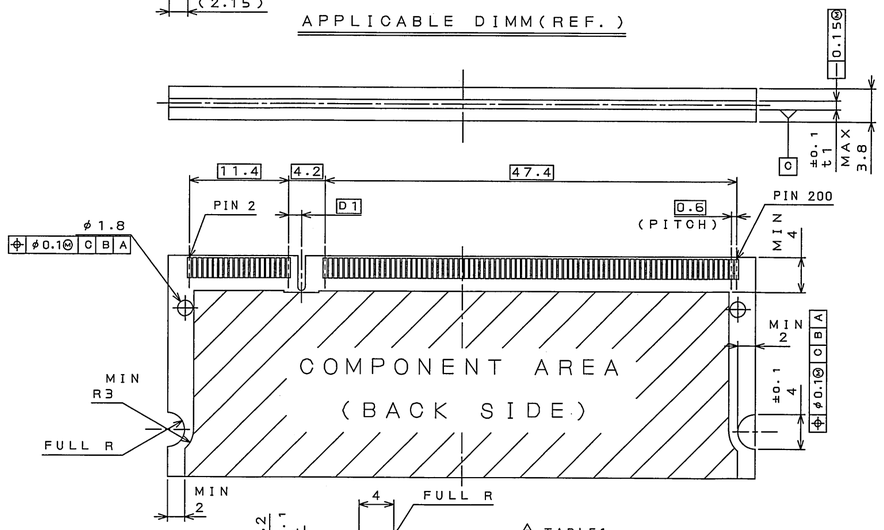

△3 TABLE3

DISCRIMINATION MARK

PARTS NAME	VOLTAGE MARK	ABRIDGED PART NUMBER
MM50-200B1-*R	2.5V	*R
MM50-200B2-*R	1.8V	2-*R

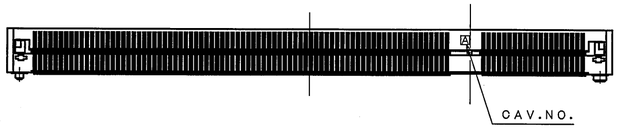

APPLICABLE P.C.B. DIMENSION(REF.)
適合基板寸法(参考)

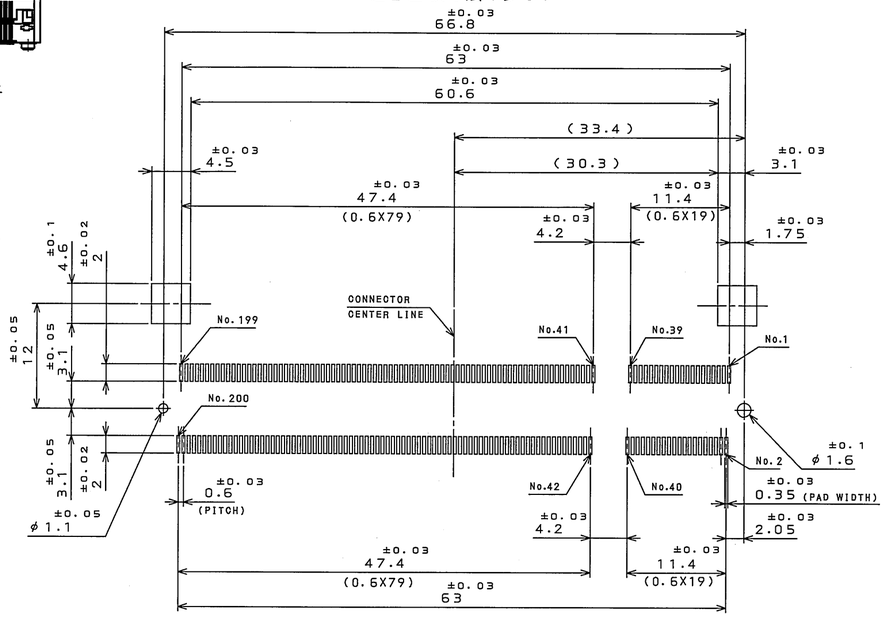

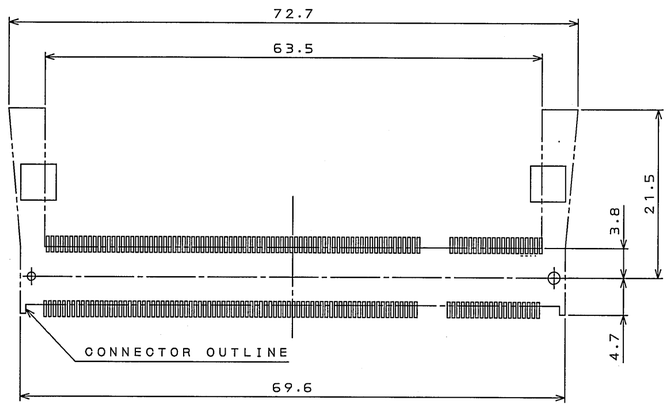

CONNECTOR MOUNTED AREA(REF.)

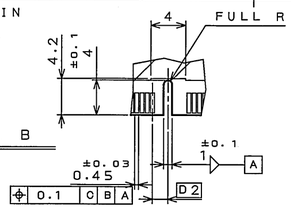

DETAIL B

△1 TABLE1

MECHANICAL KEYING

POWER SPPLY	D1	D2	D3
2.5V(TYPE A)	1.5	1.8	18.45
1.8V(TYPE B)	2.4	2.7	17.55

符号 NO.	名称 DESCRIPTION	個数 QTY.	材料 MATERIAL	仕上 FINISH	備考 REMARKS
6	KEY	1	STAINLESS	———	———
5	HOLD DOWN 2	1	PHOSPHOR BRONZE	TIN LEAD OVER NICKEL	———
4	HOLD DOWN 1	1	PHOSPHOR BRONZE	TIN LEAD OVER NICKEL	———
3	INSULATOR	1	GLASS FILLED LCP	———	UL94 V-0 COLOR WHITE
2	BOTTOM SIDE CONTACT	100	PHOSPHOR BRONZE	SEE TABLE 2 △5	———
1	TOP SIDE CONTACT	100	PHOSPHOR BRONZE	SEE TABLE 2 △5	———

仕様書(SPECIFICATION): JACS-1655-01

一般公差(GENERAL TOLERANCE)
寸法(DIMENSION): ・ ±0.8; ・X ±0.4; ・XX ±0.1; ・XXX ±
角度(ANGLES): X° ±; X°X' ±

第1版(ORIGINAL DATE): 18.Jun.2001
製図 DR.: ———
担当 CHK.: Y.YAHIRO
査閲 APPD.: ———
承認 APPD.: K.SUZUKI

尺度(SCALE): 2:1
シリーズ(SERIES): MM50
名称(TITLE): MM50 -200B*-*R
質量(MASS):

日本航空電子工業株式会社
JAPAN AVIATION ELECTRONICS INDUSTRY, LTD.

図面番号(DRAWING NO.): SJ036111
版数(REV.): 7
SIZE A2

JAE CONNECTOR.COM
Reference Only

JAE CONNECTOR DIV. PROPRIETARY.
COPYRIGHT (C) 2001, JAPAN AVIATION ELECTRONICS INDUSTRY, LTD.

DOF-0-213F(05.08)