10W to 12W Interchangeable Plug Series
PSC12R Adapter Series Meets EISA and Ecodesign Requirements

Features

- Double Insulated
- Field Changeable AC Plugs
- Ecodesign ErP Directive 2009/125/EC level 2 annex 1b
- Class B EMI
- Less Than 0.3W No-Load Current
- Over-Voltage Protection
- Efficiency Level V Compliance

Applications

- Wireless Communications
- Networking
- Portable Equipment
- Peripherals

Safety Approvals

- cUL/UL
- SAA
- CE
- C-Tick

Mechanical Characteristics

- Length: 71.7mm (2.82in)
- Width: 45mm (1.77in)
- Height: 32.39mm (1.27in)
- Weight: 75g (2.65oz)

Output Specifications

Model	DC Output Voltage	Load		Efficiency Level
		Min.	Max.	
PSC12R-050	5V	0A	2.0A	V
PSC12R-599	5.99V	0A	1.669A	V
PSC12R-090	9V	0A	1.11A	V
PSC12R-120	12V	0A	1.0A	V

Interchangeable Clips Sold Separately

Phihong is not responsible for any error, and reserves the right to make changes without notice. Please visit our website at www.phihong.com for the most up-to-date specifications and contact information.

PSC12R Characteristics

WWW.PHIHONG.COM

Input:

AC Input Voltage Rating
100 to 240V AC

AC Input Voltage Range
90 to 264V Ac

AC Input Frequency
47 to 63Hz

Input Current
0.5A (RMS) maximum at 120V AC
0.25A (RMS) maximum at 240V AC

Leakage Current
0.25mA maximum at 264V AC

Inrush Current
30A for 120V AC at maximum load
60A for 240V AC at maximum load

Input Power Saving
0.3W maximum at no load

Output:

Efficiency
Meets requirements for level V efficiency and Ecodesign ErP Directive 2009/125/EC level 2 annex 1b

Ripple (Vp-p)

5V	200mV
9V	180mV
12V	240mV

Hold-up Time
10mS minimum at maximum load

Short-Circuit Protection
Output can be shorted permanently without damage

Over-Current Protection
Short circuit protection – auto-restart

Environmental:

Temperature

Operation	0 to +40°C
Non-operation	-40 to +85°C

Humidity
Non-Condensing 10 to 90%

Emissions
FCC Class B
EN55022 Class B

Immunity

EN61000-4-2	Level 3
EN61000-4-3	Level 2
EN61000-4-4	Level 2
EN61000-4-5	Level2
EN61000-4-6	Level3
EN61000-4-11	
EN61000-3-2	Harmonic
EN61000-3-3	Flicker

Dielectric Withstand (Hi-pot) Test
Primary to Secondary: 3000V AC 1 min., 10mA

DC Output Connector
2.1 x 5.5mm center positive standard

Mating Connector
Kycon KLD-0202-A or Equivalent

AC Input Clips (sold separately)

RPA: US	RPI: India
RPB: Brazil	RPK: UK
RPC: China	RPN: Argentina
RPE: Europe	RPS: Australia
RPH: Korea	RPS: IEC320 C8
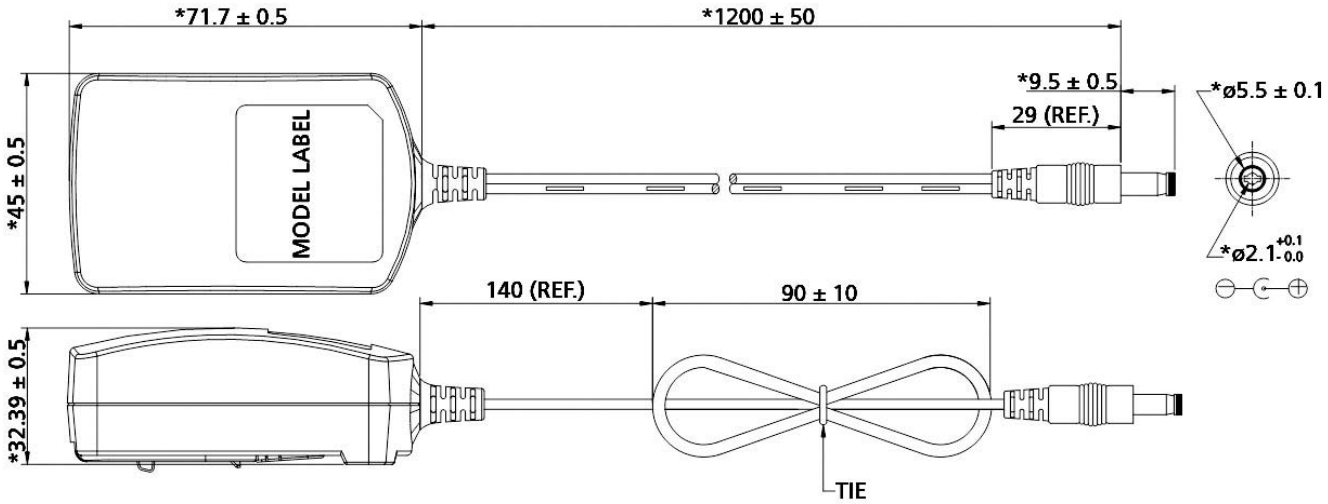
Dimension Diagram Unit: mm