THE DRAWINGS AND INFORMATION CONTAINED HEREIN ARE THE EXCLUSIVE PROPERTY OF ACTEL.
THE INFORMATION, DRAWINGS AND DESIGN CONCEPTS CONTAINED HEREIN ARE CONFIDENTIAL/PROPRIETARY, SHALL BE MAINTAINED IN STRICT CONFIDENCE, AND SHALL NOT BE RELEASED TO ANY THIRD PARTY WITHOUT THE EXPRESS WRITTEN PERMISSION OF ACTEL.

ECN NO.	REV.	DESCRIPTION OF CHANGE	EFFECTIVE DATE	ORIGINATOR
2000206	0	Initial	06/21/2000	Lijie Zhao
2005026	1	Remove word "Actel Confidential" from drawing	01/15/2005	Lijie Zhao

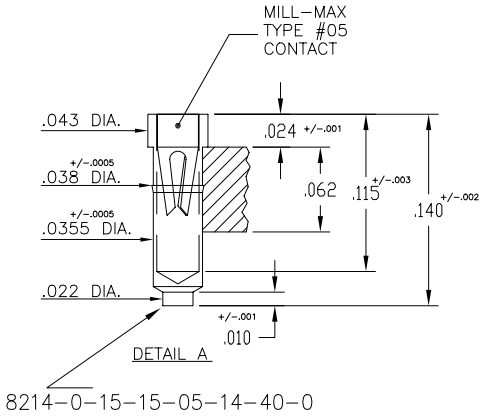

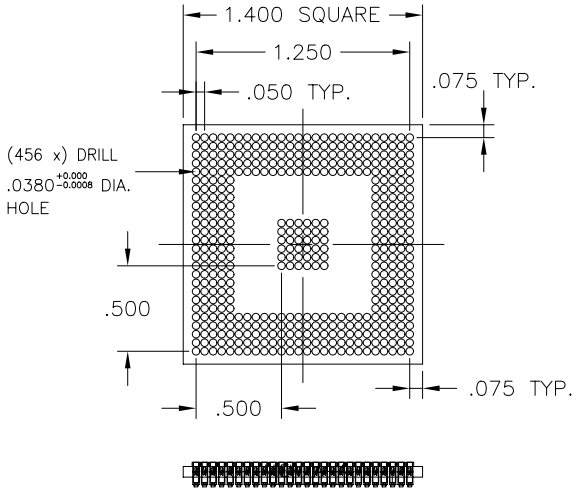

ORDER AS: S582-11-456-13-005414

EPOXY #: S500-21-456-13-005096

NOTES:

1. SHELL MATERIAL: BRASS ALLOY 360, 1/2 HARD.
2. SHELL FINISH: 10 μ" GOLD OVER 100 μ" NICKEL.
3. CONTACT MATERIAL: BERYLLIUM COPPER ALLOY 172, HEAT TREATED
4. CONTACT FINISH: 10 μ" GOLD OVER 50 μ" NICKEL.
5. INSULATOR MATERIAL: FR-4 GLASS EPOXY

UNLESS OTHERWISE SPECIFIED DIMENSIONS ARE IN MILLIMETERS
DECIMAL: X.X ±0.10, X.XX ±0.05, X.XXX ±0.03
ANGULAR: ±1°

MATERIAL: SEE NOTES
FINISH: SEE NOTES
DO NOT SCALE DRAWING

PROJECTION

APPROVALS	DATE
DRAWN: Lijie Zhao	06/21/2000
CHECKED	
ENG'R	
RELEASED	

Actel
ACTEL CORPORATION
2061 Stierlin Court
Mountain View, CA 94043-4655

TITLE: TITLE
BGA456 35x35 Mill-Max Adapter Socket

VENDOR NAME: MILL-MAX MFG. CORP.
ACTEL DWG. NUMBER: 1-07-09044 — REV 1
SIZE: B
VENDOR SID(PART) NUMBER: S582-11-456-13-005414
VENDOR DWG. NUMBER: DB0519.dwg — REV
Actel Part Number: SM-BG456-B
SCALE: NONE
SHEET 1 OF 1

1-06-13016 REV 1 (SHEET 1 OF 2)

Downloaded from Elcodis.com electronic components distributor