DATA SHEET

SKY13335-381LF: 0.1-6.0 GHz GaAs SPDT Switch

Applications

- WLAN 802.11 a/b/g networks
- WLAN repeaters
- ISM band radios
- Low power transmit receive systems

Features

- Positive voltage control
- Control voltage high = 1.8 to 5.0 V
- Broadband, 0.1 to 6.0 GHz
- Very low insertion loss, 0.40 dB typical @ 2.5 GHz
- High isolation, 27 dB typical @ 2.5 GHz
- Excellent linearity performance, P1dB = +29 dBm @ 3 V
- Ultra-miniature, MLPD (6-pin, 1.5 x 2.0 x 0.5 mm) package (MSL1, 260 °C per JEDEC J-STD-020)

NEW

Skyworks Green™ products are RoHS (Restriction of Hazardous Substances)-compliant, conform to the EIA/EICTA/JEITA Joint Industry Guide (JIG) Level A guidelines, are halogen free according to IEC-61249-2-21, and contain <1,000 ppm antimony trioxide in polymeric materials.

Description

The SKY13335-381LF is a pHEMT GaAs FET I/C switch. The device features low insertion loss and positive voltage operation with very low DC power consumption. The switch is manufactured in a compact, low-cost 1.5 x 2.0 mm, 6-pin Micro Leadframe Package Dual (MLPD) package.

The switch may be used in transmit/receive applications by connecting the RF common port (RFC, pin 5) to either the OUT1 or OUT2 port (pins 1 or 3, respectively) using a low-loss path (i.e., a positive voltage applied to either the VCTL1 or VCTL2 pins). The switch is a reflective short on the isolated port.

The 6-pin MLPD package and pinout are shown in Figure 1. A functional block diagram is shown in Figure 2. Signal pin assignments and functional pin descriptions are provided in Table 1. The absolute maximum ratings of the SKY13335-381LF are provided in Table 2 and recommended operating conditions listed in Table 3. Electrical specifications are provided in Table 4. Typical performance characteristics for the SKY13335-381LF are shown in Figures 3, 4, and 5.

The state of the SKY13335-381LF is determined by the logic provided in Table 5.

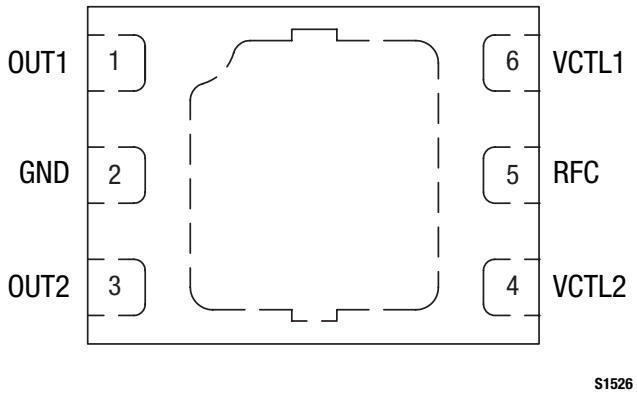

Figure 2. SKY13335-381LF Pinout – 6-Pin MLPD (Top View)

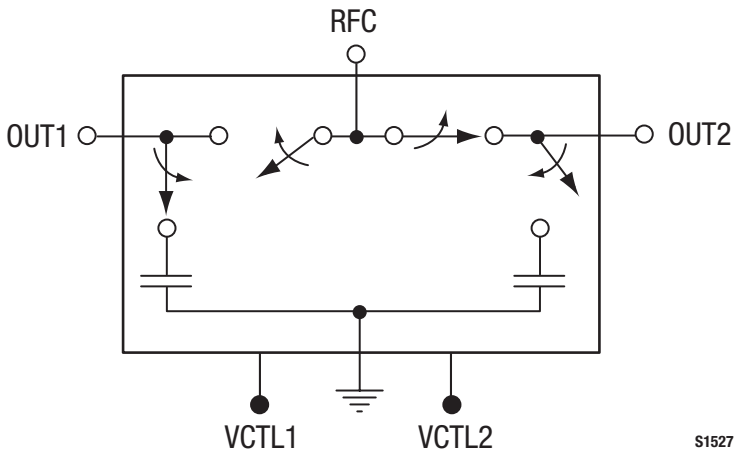

Figure 2. SKY13335-381LF Block Diagram

Table 1. SKY13335-381LF Signal Descriptions

Pin #	Name	Description	Pin #	Name	Description
1	OUT1	RF port. Must be DC blocked.	4	VCTL1	DC control voltage.
2	GND	Ground	5	RFC	RF port. Must be DC blocked.
3	OUT2	RF port. Must be DC blocked.	6	VCTL2	DC control voltage.

Note: Exposed paddle must be connected to ground.

Table 2. SKY13335-381LF Absolute Maximum Ratings

Parameter	Symbol	Minimum	Typical	Maximum	Units
RF input power: f >500 MHz @ 5 V f >500 MHz @ 3 V	P_{IN}			 +32 +31	 dBm dBm
Operating temperature	T_{OP}	–40		+85	°C
Storage temperature	T_{STG}	–65		+150	°C

Note: Exposure to maximum rating conditions for extended periods may reduce device reliability. There is no damage to device with only one parameter set at the limit and all other parameters set at or below their nominal value. Exceeding any of the limits listed here may result in permanent damage to the device.

***CAUTION**: Although this device is designed to be as robust as possible, Electrostatic Discharge (ESD) can damage this device. This device must be protected at all times from ESD. Static charges may easily produce potentials of several kilovolts on the human body or equipment, which can discharge without detection. Industry-standard ESD precautions should be used at all times.*

Table 3. SKY13335-381LF Recommended Operating Conditions

Parameter	Symbol	Minimum	Typical	Maximum	Units
Frequency	f	0.1		6.0	GHz
Control voltage: Low High	 V_{CTL_L} V_{CTL_H}	 0 1.8		 0.2 5.0	 V V
Operating temperature	T_{OP}		+25		°C

Table 4. SKY13335-381LF Electrical Specifications (Note 1)
(V_{CTL} = 0 and 3 V, T_{OP} = +25 °C, P_{IN} = 0 dBm, Characteristic Impedance [Z_0] = 50 Ω, Unless Otherwise Noted)

Parameter	Symbol	Test Condition	Min	Typical	Max	Units
Frequency	f		0.1		6.0	GHz
Insertion loss		0.1 to 6.0 GHz 0.1 to 1.0 GHz 1.0 to 2.0 GHz 2.0 to 2.5 GHz 2.5 to 3.0 GHz		0.6 0.2 0.3 0.4 0.5	0.7 0.4 0.5 0.6 0.7	dB dB dB dB dB
Isolation		0.1 to 6.0 GHz 0.1 to 1.0 GHz 1.0 to 2.0 GHz 2.0 to 2.5 GHz 2.5 to 3.0 GHz	20 26 24 25 26	24 27 27 27 27		dB dB dB dB dB
Return loss (insertion loss state)		0.1 to 6.0 GHz 0.1 to 1.0 GHz 1.0 to 2.0 GHz 2.0 to 2.5 GHz 2.5 to 3.0 GHz		17 20 23 25 25		dB dB dB dB dB
Switching characteristics: Rise/fall On/off		 10/90% or 90/10% RF 50% V_{CTL} to 90/10% RF		 50 50		 ns ns
Video feedthrough				40		mV
Input power for 1 dB compression	IP1dB	V_{CTL} = 0 and 1.8 V, 0.9 GHz V_{CTL} = 0 and 3 V, 0.9 GHz V_{CTL} = 0 and 1.8 V, 2.45 GHz V_{CTL} = 0 and 3 V, 2.45 GHz V_{CTL} = 0 and 1.8 V, 4.9-5.8 GHz V_{CTL} = 0 and 3 V, 4.9-5.8 GHz		+18 +29 +18 +29 +15 +26		dBm dBm dBm dBm dBm dBm
3rd Order Input Intercept Point	IIP3	Pin = 0 dBm/tone V_{CTL} = 0 and 1.8 V, 0.9 GHz V_{CTL} = 0 and 3 V, 0.9 GHz V_{CTL} = 0 and 1.8 V, 2.45 GHz V_{CTL} = 0 and 3 V, 2.45 GHz V_{CTL} = 0 and 1.8 V, 5.8 GHz V_{CTL} = 0 and 3 V, 5.8 GHz		 +46 +48 +40 +45 +37 +41		 dBm dBm dBm dBm dBm dBm
Control voltage	V_{CTL_L} V_{CTL_H}		0 1.8		0.2 5.0	V V
Supply current	V_{CTL_L} V_{CTL_H}			5 5		µA µA

Note 1: Performance is guaranteed only under the conditions listed in this Table and is not guaranteed over the full operating or storage temperature ranges. Operation at elevated temperatures may reduce reliability of the device.

Typical Performance Characteristics

(V_{CTL} = 0 and 3 V, T_{OP} = +25 °C, P_{IN} = 0 dBm, Characteristic Impedance [Z_0] = 50 Ω, Unless Otherwise Noted)

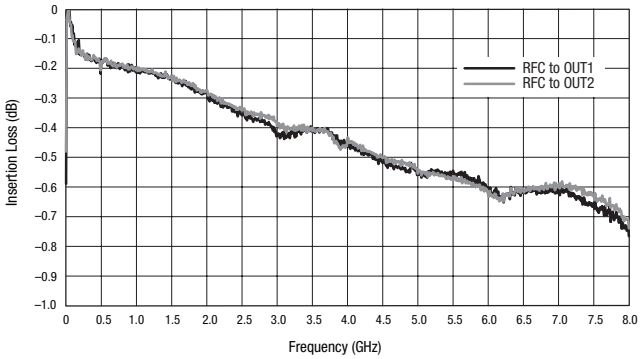

Figure 3. Typical Insertion Loss

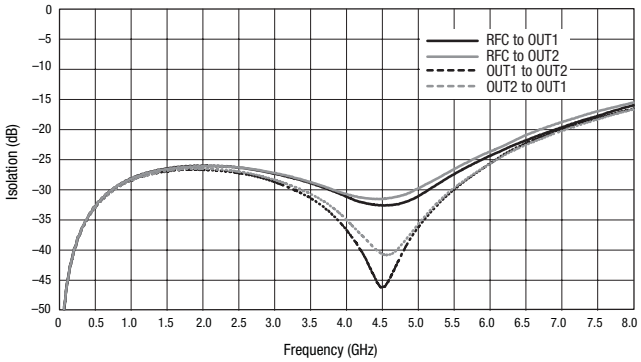

Figure 4. Typical Isolation

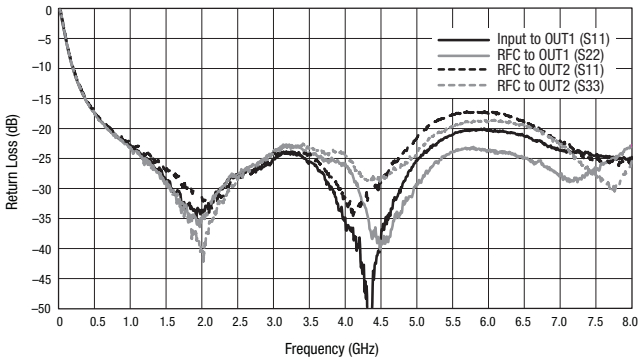

Figure 5. Typical Return Loss

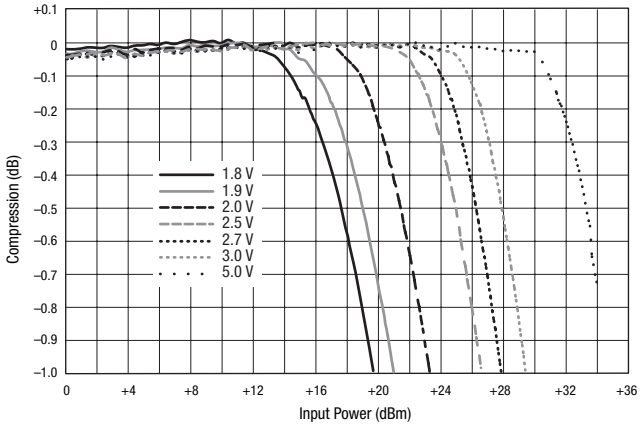

Figure 6. Compression vs Control Voltage (2450 MHz)

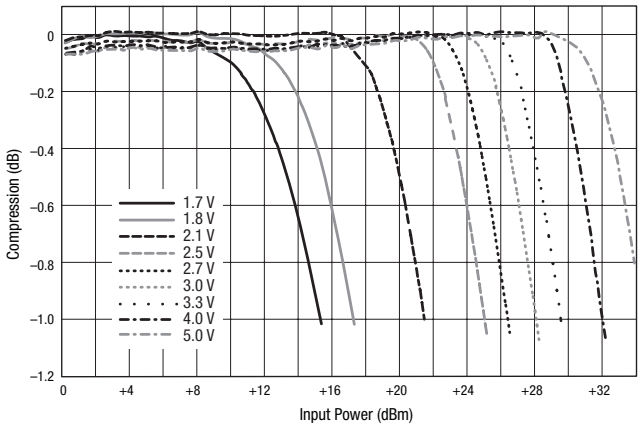

Figure 7. Compression v s Control Voltage (5.2-5.8 GHz)

Table 3. Truth Table (V_{HIGH} = 2 to 5 V)

VCTL1 (Pin 6)	VCTL2 (Pin 4)	RFC to OUT1 Path	RFC to OUT2 Path
1	0	Insertion loss	Isolation
0	1	Isolation	Insertion loss

Note: 0 = 0 to 0.2 V
1 = 1.8 to 5.0 V

Any state other than described in this Table places the device in an undefined state. An undefined state does not damage the device.

Evaluation Board Description

The SKY13335-381LF Evaluation Board is used to test the performance of the SKY13335-381LF SPDT switch. An Evaluation Board schematic diagram is provided in Figure 7. An assembly drawing for the Evaluation Board is shown in Figure 8.

Package Dimensions

The PCB layout footprint for the SKY13335-381LF is provided in Figure 9. Typical case markings are shown in Figure 10. Package dimensions for the 6-pin MLPD are shown in Figure 11, and tape and reel dimensions are provided in Figure 12.

Package and Handling Information

Since the device package is sensitive to moisture absorption, it is baked and vacuum packed before shipping. Instructions on the shipping container label regarding exposure to moisture after the container seal is broken must be followed. Otherwise, problems related to moisture absorption may occur when the part is subjected to high temperature during solder assembly.

The SKY13335-381LF is rated to Moisture Sensitivity Level 1 (MSL1) at 260 °C. It can be used for lead or lead-free soldering.

Care must be taken when attaching this product, whether it is done manually or in a production solder reflow environment. Production quantities of this product are shipped in a standard tape and reel format. For packaging details, refer to the Skyworks Application Note, *Discrete Devices and IC Switch/Attenuators Tape and Reel Package Orientation*, document number 200083.

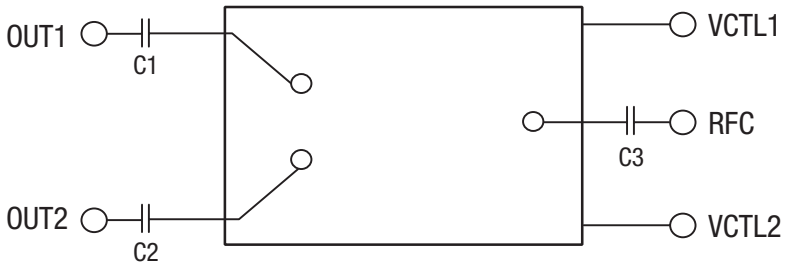

C1, C2, and C3 are blocking capacitors (47 pF)

S1530

Figure 7. SKY13335-381LF Evaluation Board Schematic

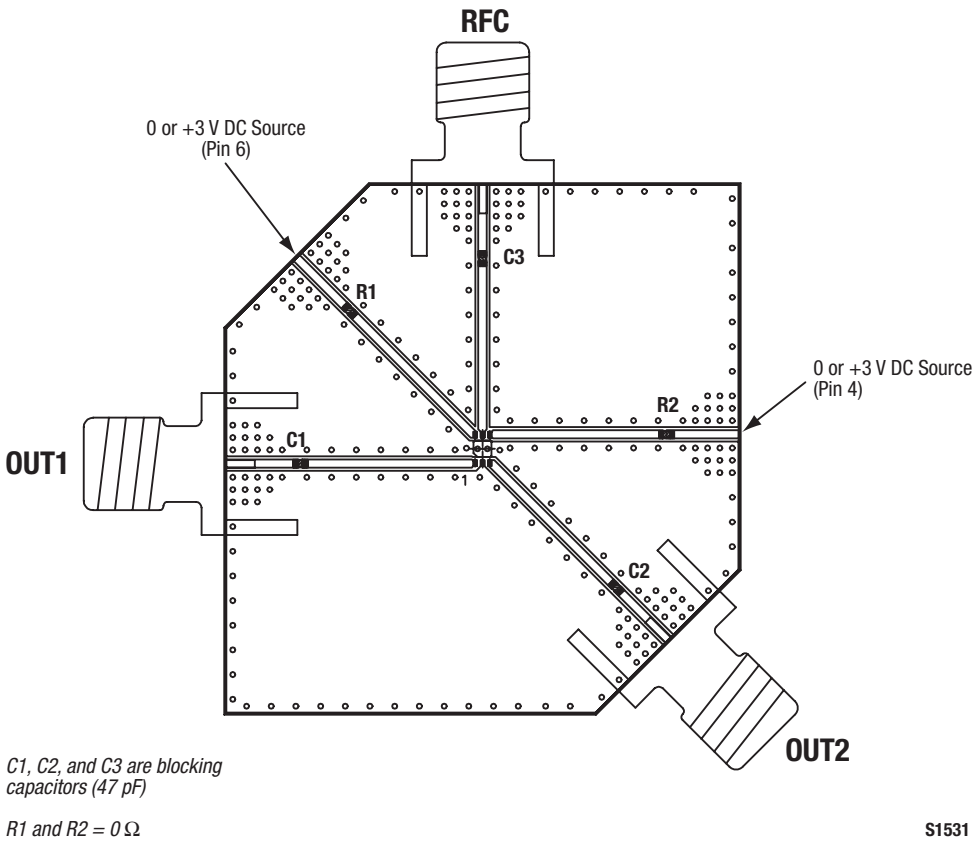

Figure 8. SKY13335-381LF Evaluation Board Assembly Drawing

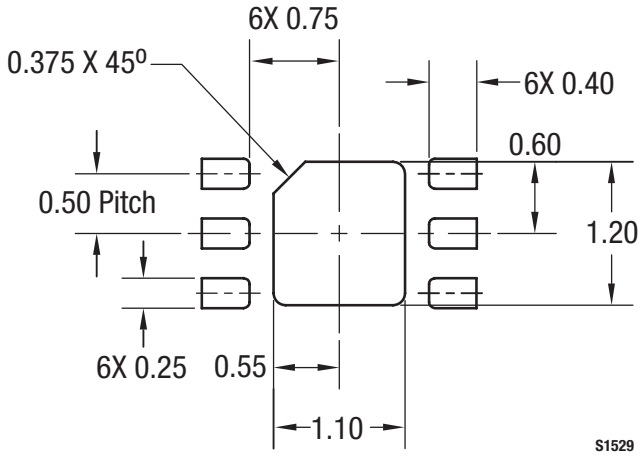

Figure 9. SKY13335-381LF PCB Layout Footprint

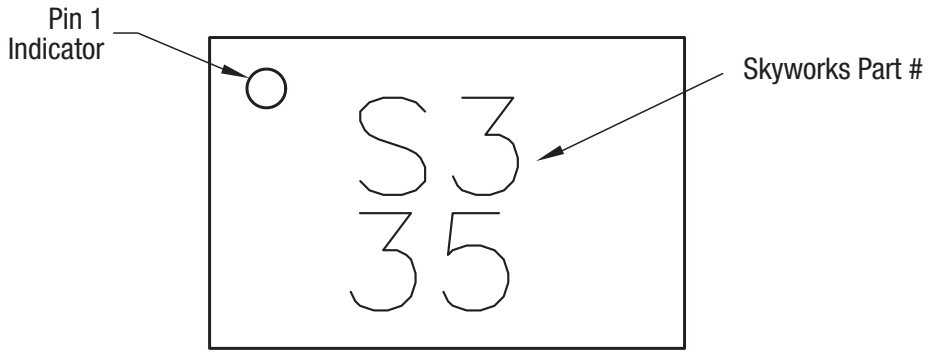

Figure 10. Typical Case Markings (Top View)

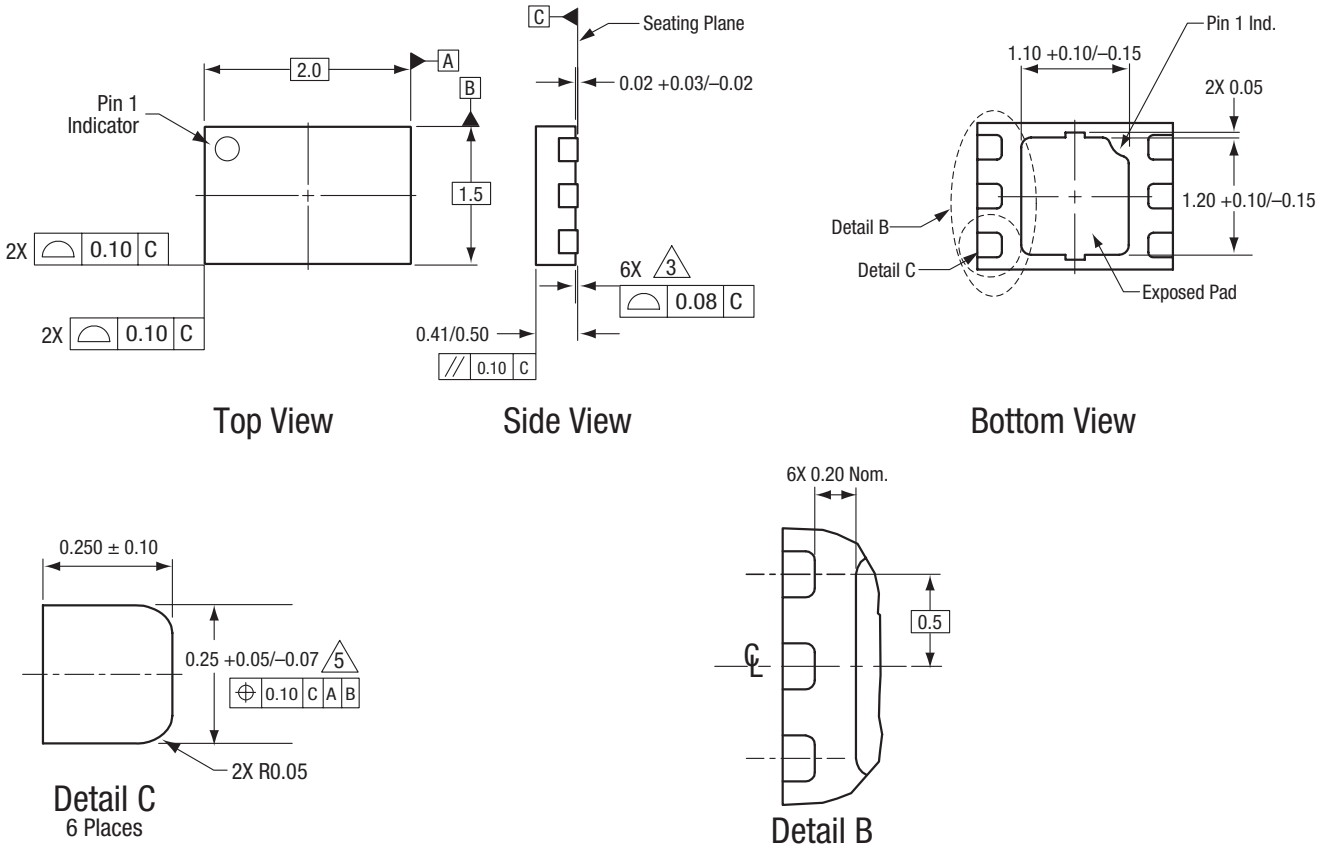

All measurements are in millimeters.
Dimensioning and tolerancing according to ASME Y14.5M-1994.
Coplanarity applies to the exposed heat sink slug as well as the terminals..
Plating requirement per source control drawing (SCD) 2504.
Dimension applies to metalized terminal and is measured between 0.15 mm and 0.30 mm from terminal tip.

S1528

Figure 11. SKY13335-381LF 6-Pin MLPD Package Dimensions

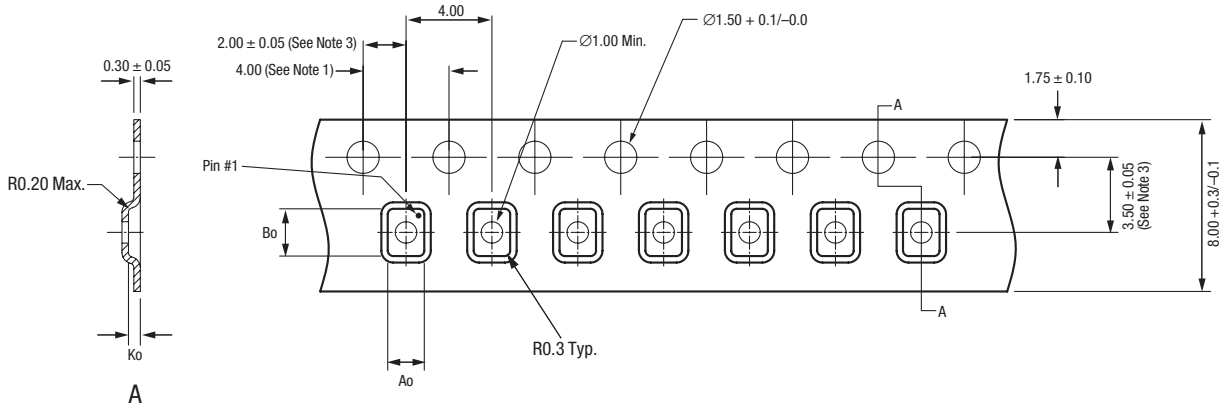

Notes:

1. *10 sprocket hole pitch cumulative tolerance ±0.2.*
2. *Chambre in compliance with EIA 481.*
3. *Pocket position relative to sprocket hole measured as true position of pocket, not pocket hole.*
4. *Carrier tape: black conductive polycarbonate or polystyrene.*
5. *Cover tape material: transparent conductive PSA.*
6. *Cover tape size: 9.3mm width.*
7. *All measurements are in millimeters.*

Ao = 1.70
Bo = 2.20
Ko = 0.55

S1723

Figure 12. SKY13335-381LF Tape and Reel Dimensions

Ordering Information

Model Name	Manufacturing Part Number	Evaluation Kit Part Number
SKY13335-381LF SPDT Switch	SKY13335-381LF (Pb-free and Green package)	SK41218-2, Rev. 1

Copyright © 2009 Skyworks Solutions, Inc. All Rights Reserved.

Information in this document is provided in connection with Skyworks Solutions, Inc. (“Skyworks”) products or services. These materials, including the information contained herein, are provided by Skyworks as a service to its customers and may be used for informational purposes only by the customer. Skyworks assumes no responsibility for errors or omissions in these materials or the information contained herein. Skyworks may change its documentation, products, services, specifications or product descriptions at any time, without notice. Skyworks makes no commitment to update the materials or information and shall have no responsibility whatsoever for conflicts, incompatibilities, or other difficulties arising from any future changes.

No license, whether express, implied, by estoppel or otherwise, is granted to any intellectual property rights by this document. Skyworks assumes no liability for any materials, products or information provided hereunder, including the sale, distribution, reproduction or use of Skyworks products, information or materials, except as may be provided in Skyworks Terms and Conditions of Sale.

THE MATERIALS, PRODUCTS AND INFORMATION ARE PROVIDED “AS IS” WITHOUT WARRANTY OF ANY KIND, WHETHER EXPRESS, IMPLIED, STATUTORY, OR OTHERWISE, INCLUDING FITNESS FOR A PARTICULAR PURPOSE OR USE, MERCHANTABILITY, PERFORMANCE, QUALITY OR NON-INFRINGEMENT OF ANY INTELLECTUAL PROPERTY RIGHT; ALL SUCH WARRANTIES ARE HEREBY EXPRESSLY DISCLAIMED. SKYWORKS DOES NOT WARRANT THE ACCURACY OR COMPLETENESS OF THE INFORMATION, TEXT, GRAPHICS OR OTHER ITEMS CONTAINED WITHIN THESE MATERIALS. SKYWORKS SHALL NOT BE LIABLE FOR ANY DAMAGES, INCLUDING BUT NOT LIMITED TO ANY SPECIAL, INDIRECT, INCIDENTAL, STATUTORY, OR CONSEQUENTIAL DAMAGES, INCLUDING WITHOUT LIMITATION, LOST REVENUES OR LOST PROFITS THAT MAY RESULT FROM THE USE OF THE MATERIALS OR INFORMATION, WHETHER OR NOT THE RECIPIENT OF MATERIALS HAS BEEN ADVISED OF THE POSSIBILITY OF SUCH DAMAGE.

Skyworks products are not intended for use in medical, lifesaving or life-sustaining applications, or other equipment in which the failure of the Skyworks products could lead to personal injury, death, physical or environmental damage. Skyworks customers using or selling Skyworks products for use in such applications do so at their own risk and agree to fully indemnify Skyworks for any damages resulting from such improper use or sale.

Customers are responsible for their products and applications using Skyworks products, which may deviate from published specifications as a result of design defects, errors, or operation of products outside of published parameters or design specifications. Customers should include design and operating safeguards to minimize these and other risks. Skyworks assumes no liability for applications assistance, customer product design, or damage to any equipment resulting from the use of Skyworks products outside of stated published specifications or parameters.

Skyworks, the Skyworks symbol, and “Breakthrough Simplicity” are trademarks or registered trademarks of Skyworks Solutions, Inc., in the United States and other countries. Third-party brands and names are for identification purposes only, and are the property of their respective owners. Additional information, including relevant terms and conditions, posted at www.skyworksinc.com, are incorporated by reference.

Mouser Electronics

Authorized Distributor

Click to View Pricing, Inventory, Delivery & Lifecycle Information:

Skyworks:

SKY13335-381LF