Frontier Electronics Corp.

667 E. COCHRAN STREET, SIMI VALLEY, CA 93065
TEL: (805) 522-9998 FAX: (805) 522-9989
E-mail: frontiersales@frontierusa.com
Web: http://www.frontierusa.com

3A SURFACE MOUNT SCHOTTKY BARRIER RECTIFIERS
SS32 THRU SS310

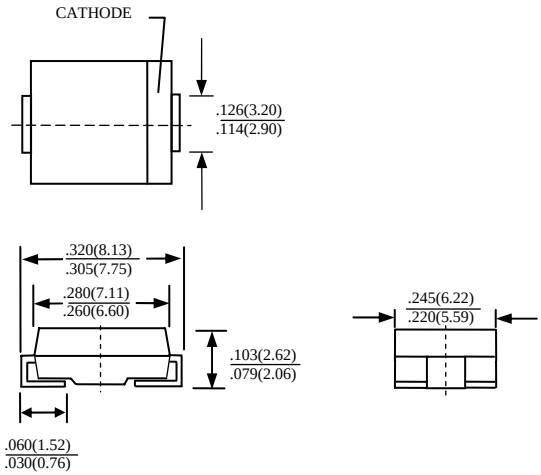

FEATURES
- FOR SURFACE MOUNTED APPLICATIONS
- LOW PROFILE PACKAGE
- BUILT-IN STRAIN RELIEF
- EASY PICK AND PLACE
- PLASTIC MATERIAL USED CARRIES UNDERWRITERS LABORATORY CLASSIFICATION 94 V-0
- EXTREMELY LOW VF
- MAJORITY CARRIER CONDUCTION
- HIGH TEMPERATURE SOLDERING: 250°C/10 SECONDS AT TERMINALS

MECHANICAL DATA
- CASE: MOLDED PLASTIC, DO-214AB (SMB), DIMENSIONS IN MILLIMETERS (MILLIMETERS
- TERMINALS: SOLDER PLATED
- POLARITY INDICATED BY CATHODE BAND
- WEIGHT 0.21 GRAMS

MAXIMUM RATINGS AND ELECTRICAL CHARACTERISTICS RATINGS AT 25°C AMBIENT TEMPERATURE UNLESS OTHERWISE SPECIFIED SINGLE PHASE, HALF WAVE, 60 HZ, RESISTIVE OR INDUCTIVE LOAD. FOR CAPACITIVE LOAD, DERATE CURRENT BY 20%

RATINGS	SYMBOL	SS32	SS33	SS34	SS35	SS36	SS38	SS310	UNITS
MAXIMUM RECURRENT PEAK REVERSE VOLTAGE	V_{RRM}	20	30	40	50	60	80	100	V
MAXIMUM RMS VOLTAGE	V_{RMS}	14	21	28	35	42	56	70	V
MAXIMUM DC BLOCKING VOLTAGE	V_{DC}	20	30	40	50	60	80	100	V
MAXIMUM AVERAGE FORWARD RECTIFIED CURRENT SEE FIG.1	I_O	3.0							A
MAXIMUM OVERLOAD SURGE 8.3ms SINGLE HALF SINE-WAVE	I_{FSM}	100							A
TYPICAL JUNCTION CAPACITANCE (NOTE 1)	C_J	300							PF
TYPICAL THERMAL RESISTANCE (NOTE 2)	$R_{\theta jL}$	17							℃/W
TYPICAL THERMAL RESISTANCE (NOTE 2)	$R_{\theta jA}$	55							℃/W
STORAGE TEMPERATURE RANGE	T_{STG}	-55 TO + 150							℃
OPERATING TEMPERATURE RANGE	T_{OP}	-55 TO + 125							℃

ELECTRICAL CHARACTERISTICS (A_T T_A =25°C UNLESS OTHERWISE NOTED)

CHARACTERISTICS	SYMBOL	SS32	SS33	SS34	SS35	SS36	SS38	SS310	UNITS
MAXIMUM FORWARD VOLTAGE AT 3.0A AND 25℃	V_F	0.50			0.70		0.85		V
MAXIMUM REVERSE CURRENT AT 25℃	I_R	0.5							mA

NOTE: 1. MEASURED AT 1.0 MHZ AND APPLIED REVERSE VOLTAGE OF 4.0 V
2. P.C.B. MOUNTED 0.55”×0.55 “(14×14 mm) 0.013mm THICK COPPER PAD AREAS
3. SMA PACKAGE SUFFIX “ A” , SMB PACKAGE SUFFIX “B”, SMC NO SUFFIX

RATINGS AND CHARACTERISTIC CURVE SS32 THRU SS310

FIG. 1 - FORWARD CURRENT DERATING CURVE

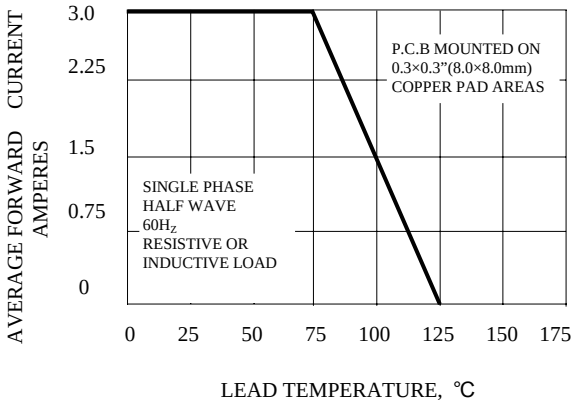

FIG. 2 - TYPICAL INSTANTANEOUS FORWARD CHARACTERISTICS

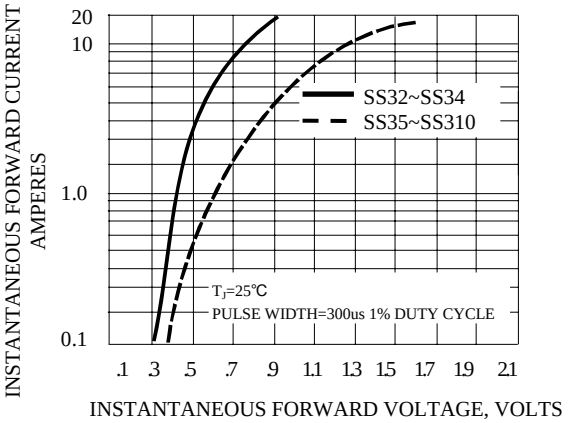

FIG. 3A - TYPICAL REVERSE CHARACTERISTICS

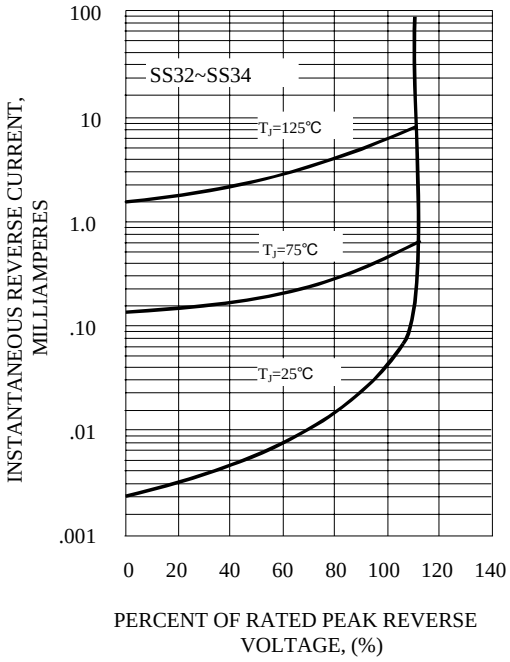
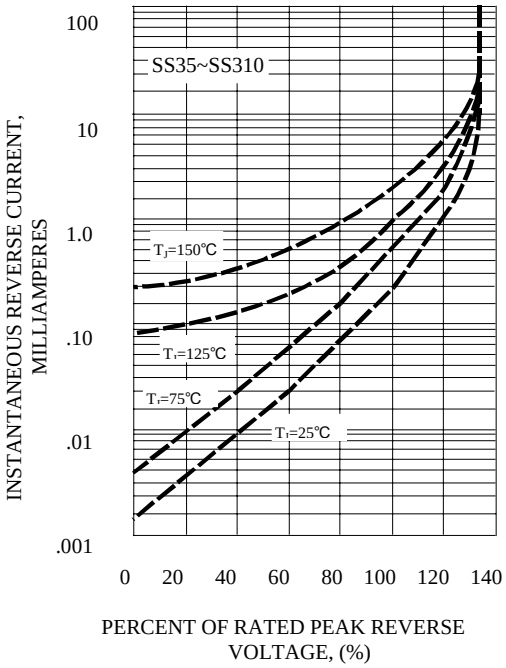
FIG. 3B - TYPICAL REVERSE CHARACTERISTICS