STM705, STM706
STM707, STM708, STM813L

5 V supervisor

Datasheet - production data

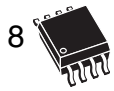

SO8 (M)

TSSOP8 3x3 (DS)[1]

1. Contact local ST sales office for availability.

- 200 ms (typ) t_{rec}
- Watchdog timer - 1.6 s (typ)
- Manual reset input ($\overline{MR}$)
- Power-fail comparator (PFI/$\overline{PFO}$)
- Low supply current - 40 µA (typ)
- Guaranteed $\overline{RST}$ (RST) assertion down to V_{CC} = 1.0 V
- Operating temperature:
  –40 °C to 85 °C (industrial grade) or
  –40 °C to 125 °C (automotive grade for the STM706 only)
- RoHS compliance
  – Lead-free components are compliant with the RoHS directive

Features

- 5 V operating voltage
- Precision V_{CC} monitor
  – STM705/707/813L
  – 4.50 V $\leq$ V_{RST} $\leq$ 4.75 V
  – STM706/708
  – 4.25 $\leq$ V_{RST} $\leq$ 4.50 V
- RST and $\overline{RST}$ outputs

Table 1. Device summary

	Watchdog input	Watchdog output[1]	Active-low $\overline{RST}$[1]	Active-high RST[1]	Manual reset input	Power-fail comparator
STM705	✓	✓	✓		✓	✓
STM706[2]	✓	✓	✓		✓	✓
STM707			✓	✓	✓	✓
STM708			✓	✓	✓	✓
STM813L	✓	✓		✓	✓	✓

1. Push-pull output
2. Automotive grade (-40 °C to 125 °C) option for the STM706 only.

This is information on a product in full production. www.st.com

Contents

1 Description 5

2 Pin descriptions 8

2.1 MR 8
2.2 WDI 8
2.3 WDO 8
2.4 RST 8
2.5 RST 8
2.6 PFI 8
2.7 PFO 9

3 Operation 11

3.1 Reset output 11
3.2 Push-button reset input 11
3.3 Watchdog input (STM705/706/813L) 11
3.4 Watchdog output (STM705/706/813L) 12
3.5 Power-fail input/output 12
3.6 Ensuring a valid reset output down to VCC = 0 V 12
3.7 Interfacing to microprocessors with bidirectional reset pins 13

4 Typical operating characteristics 14

5 Maximum ratings 22

6 DC and AC parameters 23

7 Package mechanical data 27

8 Part numbering 30

9 Revision history 32

List of tables

Table 1. Device summary . . . 1
Table 2. Signal names . . . 6
Table 3. Pin description . . . 9
Table 4. Absolute maximum ratings . . . 22
Table 5. Operating and AC measurement conditions . . . 23
Table 6. DC and AC characteristics . . . 25
Table 7. SO8 - 8-lead plastic small outline, 150 mils body width, pack. mech. data . . . 28
Table 8. TSSOP8 - 8-lead, thin shrink small outline, 3 x 3 mm body size, mechanical data . . . 29
Table 9. Ordering information scheme . . . 30
Table 10. Marking description . . . 31
Table 11. Document revision history . . . 32

List of figures

Figure 1. Logic diagram (STM705/706/813L) 5
Figure 2. Logic diagram (STM707/708) 5
Figure 3. STM705/706/813L SO8 connections 6
Figure 4. STM705/706/813L TSSOP8 connections 6
Figure 5. STM707/708 SO8 connections 7
Figure 6. STM707/708 TSSOP8 connections 7
Figure 7. Block diagram (STM705/706/813L) 9
Figure 8. Block diagram (STM707/708) 10
Figure 9. Hardware hookup 10
Figure 10. Reset output valid to ground circuit. 12
Figure 11. Interfacing to microprocessors with bidirectional reset I/O 13
Figure 12. Supply current vs. temperature (no load) 14
Figure 13. VPFI threshold vs. temperature 14
Figure 14. Reset comparator propagation delay vs. temperature 15
Figure 15. Power-up trec vs. temperature 15
Figure 16. Normalized reset threshold vs. temperature 16
Figure 17. Watchdog time-out period vs. temperature 16
Figure 18. PFI to PFO propagation delay vs. temperature 17
Figure 19. Output voltage vs. load current (VCC = 5 V; TA = 25 °C) 17
Figure 20. RST output voltage vs. supply voltage 18
Figure 21. RST output voltage vs. supply voltage 18
Figure 22. RST response time (assertion) 19
Figure 23. RST response time (assertion) 20
Figure 24. Power-fail comparator response time (assertion) 20
Figure 25. Power-fail comparator response time (de-assertion) 21
Figure 26. Maximum transient duration vs. reset threshold overdrive 21
Figure 27. AC testing input/output waveforms 23
Figure 28. Power-fail comparator waveform 23
Figure 29. MR timing waveform 24
Figure 30. Watchdog timing (STM705/706/813L) 24
Figure 31. SO8 – 8-lead plastic small outline, 150 mils body width, outline 28
Figure 32. TSSOP8 – 8-lead, thin shrink small outline, 3 x 3 mm body size, outline 29

1 Description

The STM705/706/707/708/813L supervisors are self-contained devices which provide microprocessor supervisory functions. A precision voltage reference and comparator monitors the V_{CC} input for an out-of-tolerance condition. When an invalid V_{CC} condition occurs, the reset output ($\overline{RST}$) is forced low (or high in the case of RST).

These devices also offer a watchdog timer (except for STM707/708) as well as a power-fail comparator to provide the system with an early warning of impending power failure.

These devices are available in a standard 8-pin SOIC package or a space-saving 8-pin TSSOP package.

Figure 1. Logic diagram (STM705/706/813L)

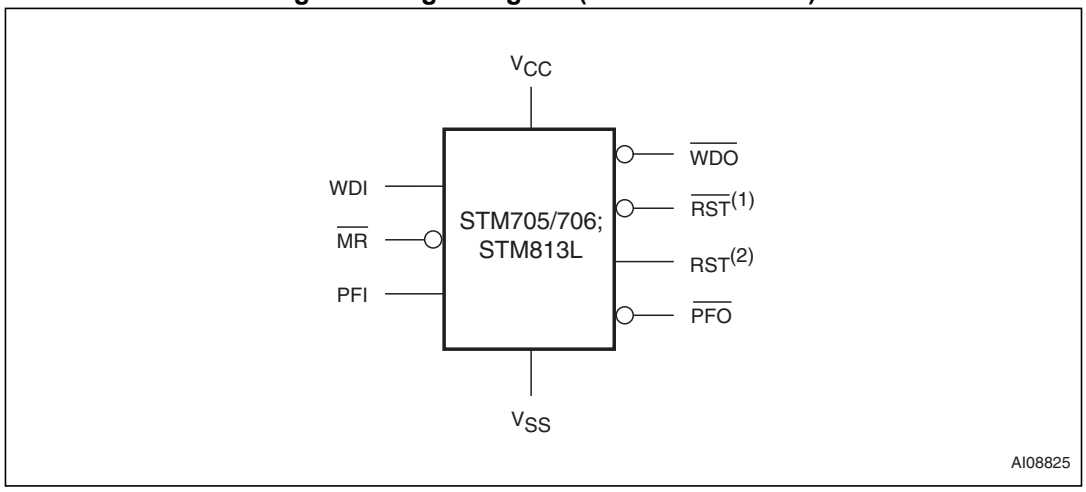

1. For STM705/706 only.
2. For STM813L only.

Figure 2. Logic diagram (STM707/708)

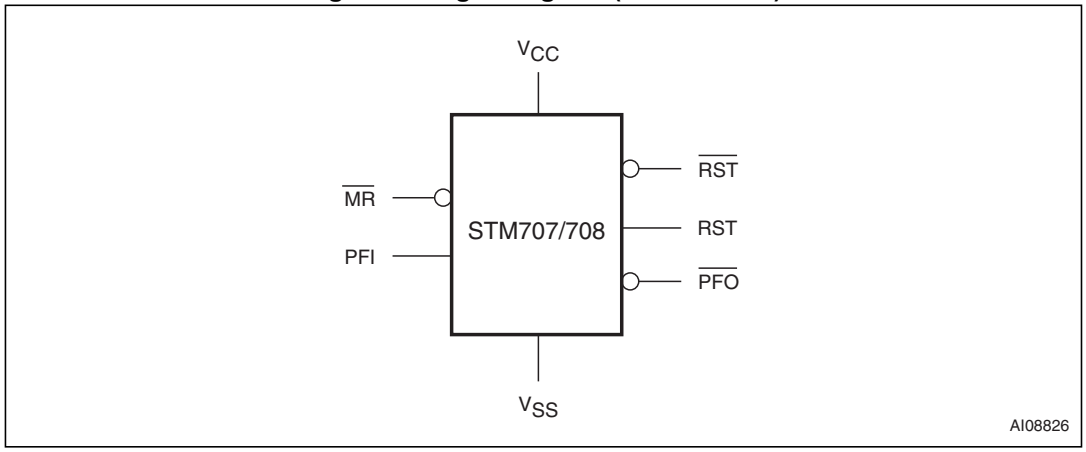

Table 2. Signal names

$\overline{MR}$	Push-button reset input
WDI	Watchdog input
$\overline{WDO}$	Watchdog output
$\overline{RST}$	Active-low reset output
RST(1)	Active-high reset output
V_{CC}	Supply voltage
PFI	Power-fail input
$\overline{PFO}$	Power-fail output
V_{SS}	Ground
NC	No connect

1. For STM813L only.

Figure 3. STM705/706/813L SO8 connections

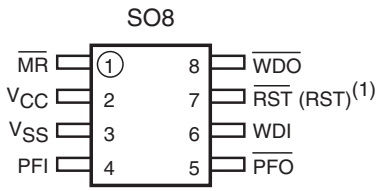

1. For STM813L, reset output is active-high.

Figure 4. STM705/706/813L TSSOP8 connections

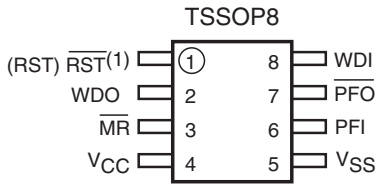

1. For STM813L, reset output is active-high.

Figure 5. STM707/708 SO8 connections

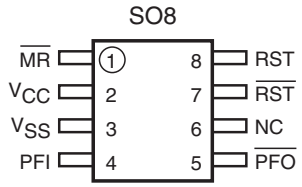

Figure 6. STM707/708 TSSOP8 connections

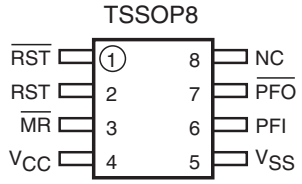

2 Pin descriptions

2.1 $\overline{MR}$

A logic low on $\overline{MR}$ asserts the reset output. Reset remains asserted as long as $\overline{MR}$ is low and for t_{rec} after $\overline{MR}$ returns high. This active-low input has an internal pull-up. It can be driven from a TTL or CMOS logic line, or shorted to ground with a switch. Leave open if unused.

2.2 WDI

If WDI remains high or low for 1.6 s, the internal watchdog timer runs out and reset (or $\overline{WDO}$) is triggered. The internal watchdog timer clears while reset is asserted or when WDI sees a rising or falling edge.

The watchdog function can be disabled by allowing the WDI pin to float.

2.3 $\overline{WDO}$

It goes low when a transition does not occur on WDI within 1.6 s, and remains low until a transition occurs on WDI (indicating the watchdog interrupt has been serviced). $\overline{WDO}$ also goes low when V_{CC} falls below the reset threshold; however, unlike the reset output, $\overline{WDO}$ goes high as soon as V_{CC} exceeds the reset threshold. Output type is push-pull.

Note: For those devices with a $\overline{WDO}$ output, a watchdog timeout will not trigger reset unless $\overline{WDO}$ is connected to $\overline{MR}$.

2.4 $\overline{RST}$

Pulses low when triggered, and stays low whenever V_{CC} is below the reset threshold or when $\overline{MR}$ is a logic low. It remains low for t_{rec} after either V_{CC} rises above the reset threshold, or $\overline{MR}$ goes from low to high.

2.5 RST

Goes high with triggered, and stays high whenever V_{CC} is above the reset threshold or when $\overline{MR}$ is a logic high. It stays high for t_{rec} after either V_{CC} falls below the reset threshold, or $\overline{MR}$ goes from high to low.

2.6 PFI

When PFI is less than V_{PFI}, $\overline{PFO}$ goes low; otherwise, $\overline{PFO}$ remains high. Connect to ground if unused.

2.7 $\overline{PFO}$

When PFI is less than V_{PFI}, $\overline{PFO}$ goes low; otherwise, $\overline{PFO}$ remains high. Leave open if unused. Output type is push-pull.

Table 3. Pin description

Pin			Name	Function
STM813L	STM707 STM708	STM705 STM706		
1	1	1	$\overline{MR}$	Push-button reset input
6	—	6	WDI	Watchdog input
8	—	8	$\overline{WDO}$	Watchdog output (push-pull)
—	7	7	$\overline{RST}$	Active-low reset output
7	8	—	RST	Active-high reset output
2	2	2	V_{CC}	Supply voltage
4	4	4	PFI	Power-fail input
5	5	5	$\overline{PFO}$	Power-fail output (push-pull)
3	3	3	V_{SS}	Ground
—	6	—	NC	No connect

Figure 7. Block diagram (STM705/706/813L)

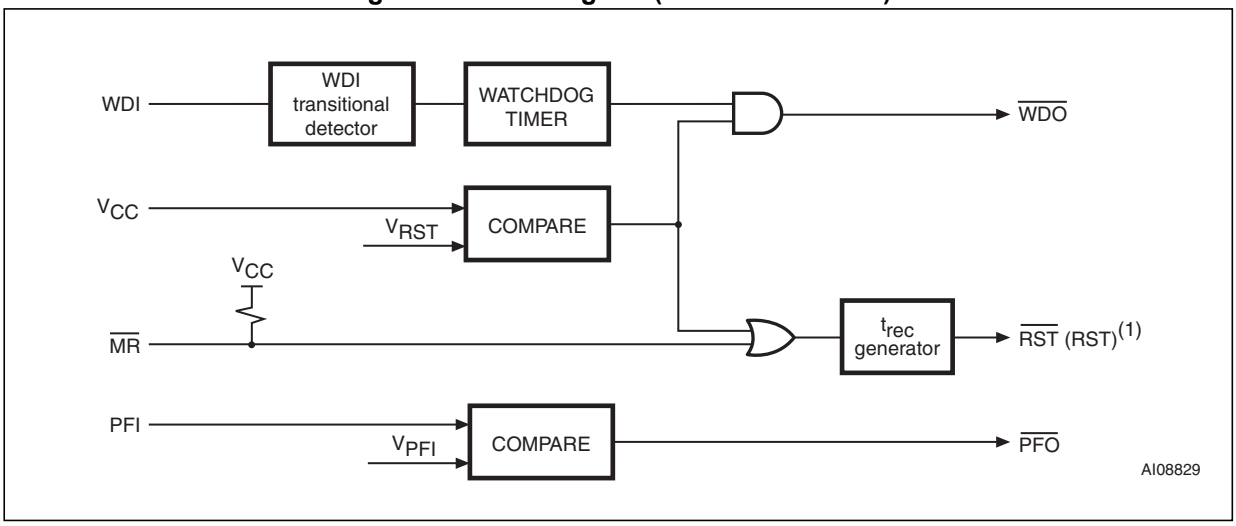

1. For STM813L only.

Figure 8. Block diagram (STM707/708)

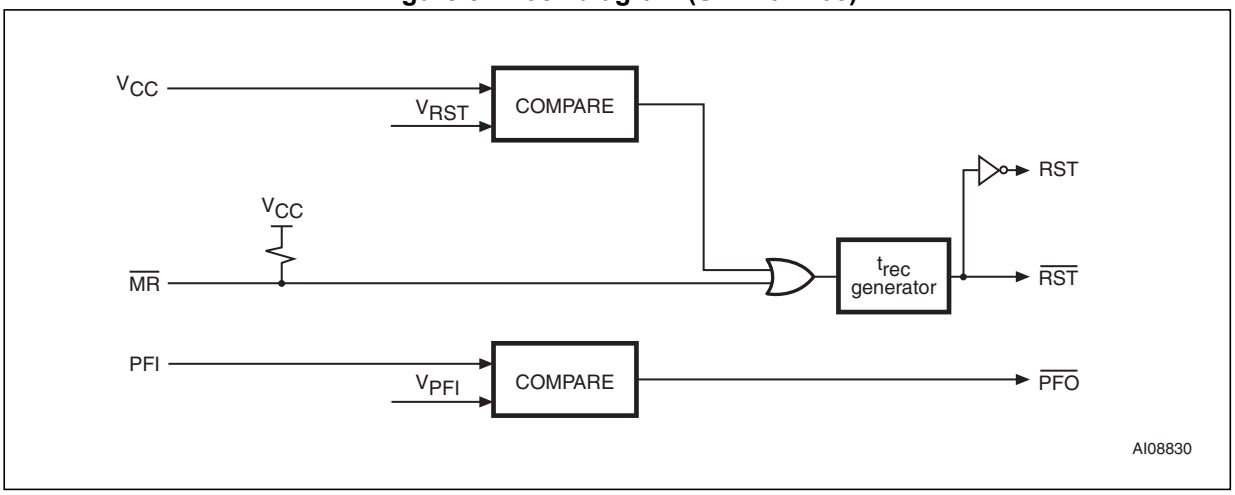

Figure 9. Hardware hookup

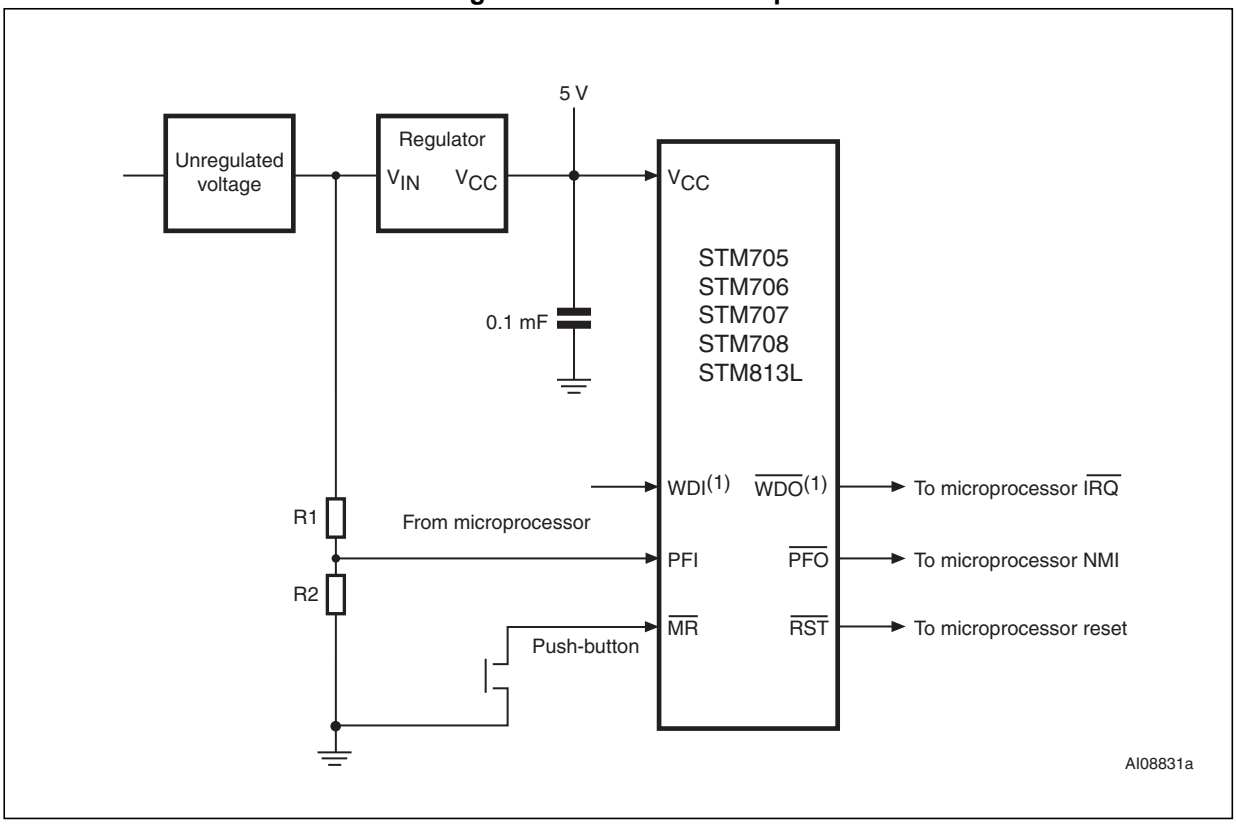

1. For STM705/706/813L.

3 Operation

3.1 Reset output

The STM705/706/707/708/813L supervisor asserts a reset signal to the MCU whenever V_{CC} goes below the reset threshold (V_{RST}), a watchdog time-out occurs (if $\overline{WDO}$ is tied to $\overline{MR}$), or when the push-button reset input ($\overline{MR}$) is taken low. $\overline{RST}$ is guaranteed to be a logic low (logic high for STM707/708/813L) for $V_{CC} < V_{RST}$ down to V_{CC} =1 V for T_A = 0 °C to 85 °C.

During power-up, once V_{CC} exceeds the reset threshold an internal timer keeps $\overline{RST}$ low for the reset time-out period, t_{rec}. After this interval $\overline{RST}$ returns high.

If V_{CC} drops below the reset threshold, $\overline{RST}$ goes low. Each time $\overline{RST}$ is asserted, it stays low for at least the reset time-out period (t_{rec}). Any time V_{CC} goes below the reset threshold the internal timer clears. The reset timer starts when V_{CC} returns above the reset threshold.

3.2 Push-button reset input

A logic low on $\overline{MR}$ asserts reset. Reset remains asserted while $\overline{MR}$ is low, and for t_{rec} (see *Figure 29*) after it returns high. The $\overline{MR}$ input has an internal 40 Ω pull-up resistor, allowing it to be left open if not used. This input can be driven with TTL/CMOS-logic levels or with open-drain/ collector outputs. Connect a normally open momentary switch from $\overline{MR}$ to GND to create a manual reset function; external debounce circuitry is not required. If $\overline{MR}$ is driven from long cables or the device is used in a noisy environment, connect a 0.1 µF capacitor from $\overline{MR}$ to GND to provide additional noise immunity. $\overline{MR}$ may float, or be tied to V_{CC} when not used.

3.3 Watchdog input (STM705/706/813L)

The watchdog timer can be used to detect an out-of-control MCU. If the MCU does not toggle the Watchdog Input (WDI) within t_{WD} (1.6 s), the reset is asserted. The internal 1.6s timer is cleared by either:

1. a reset pulse, or
2. by toggling WDI (high-to-low or low-to-high), which can detect pulses as short as 50 ns. If WDI is tied high or low, a reset pulse is triggered every 1.8 s (t_{WD} + t_{rec}), if $\overline{WDO}$ is connected to $\overline{MR}$.

See *Figure 30* for STM705/706/813L.

The timer remains cleared and does not count for as long as reset is asserted. As soon as reset is released, the timer starts counting.

Note: The watchdog function may be disabled by floating WDI or tri-stating the driver connected to WDI. When tri-stated or disconnected, the maximum allowable leakage current is 10 µA and the maximum allowable load capacitance is 200 pF.

3.4 Watchdog output (STM705/706/813L)

When V_{CC} drops below the reset threshold, $\overline{WDO}$ will go low even if the watchdog timer has not yet timed out. However, unlike the reset output, $\overline{WDO}$ goes high as soon as V_{CC} exceeds the reset threshold. $\overline{WDO}$ may be used to generate a reset pulse by connecting it to the $\overline{MR}$ input.

3.5 Power-fail input/output

The power-fail input (PFI) is compared to an internal reference voltage (independent from the V_{RST} comparator). If PFI is less than the power-fail threshold (V_{PFI}), the power-fail output ($\overline{PFO}$) will go low. This function is intended for use as an undervoltage detector to signal a failing power supply. Typically PFI is connected through an external voltage divider (see *Figure 9*) to either the unregulated DC input (if it is available) or the regulated output of the V_{CC} regulator. The voltage divider can be set up such that the voltage at PFI falls below V_{PFI} several milliseconds before the regulated V_{CC} input to the STM705/706/707/708/ 813L or the microprocessor drops below the minimum operating voltage.

If the comparator is unused, PFI should be connected to V_{SS} and $\overline{PFO}$ left unconnected. $\overline{PFO}$ may be connected to $\overline{MR}$ on the STM703/704/818 so that a low voltage on PFI will generate a reset output.

3.6 Ensuring a valid reset output down to V_{CC} = 0 V

When V_{CC} falls below 1 V, the state of the $\overline{RST}$ output can no longer be guaranteed, and becomes essentially an open circuit. If a high value pulldown resistor is added to the $\overline{RST}$ pin, the output will be held low during this condition. A resistor value of approximately 100 kΩ will be large enough to not load the output under operating conditions, but still sufficient to pull $\overline{RST}$ to ground during this low voltage condition (see *Figure 10*).

Figure 10. Reset output valid to ground circuit

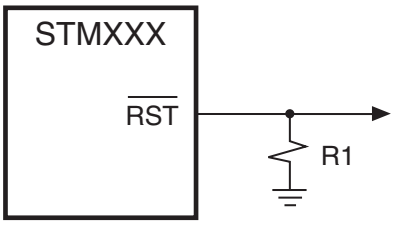

3.7 Interfacing to microprocessors with bidirectional reset pins

Microprocessors with bidirectional reset pins can contend with the STM705-708 reset output. For example, if the reset output is driven high and the micro wants to pull it low, signal contention will result. To prevent this from occurring, connect a 4.7 kΩ resistor between the reset output and the micro's reset I/O as in *Figure 11*.

Figure 11. Interfacing to microprocessors with bidirectional reset I/O

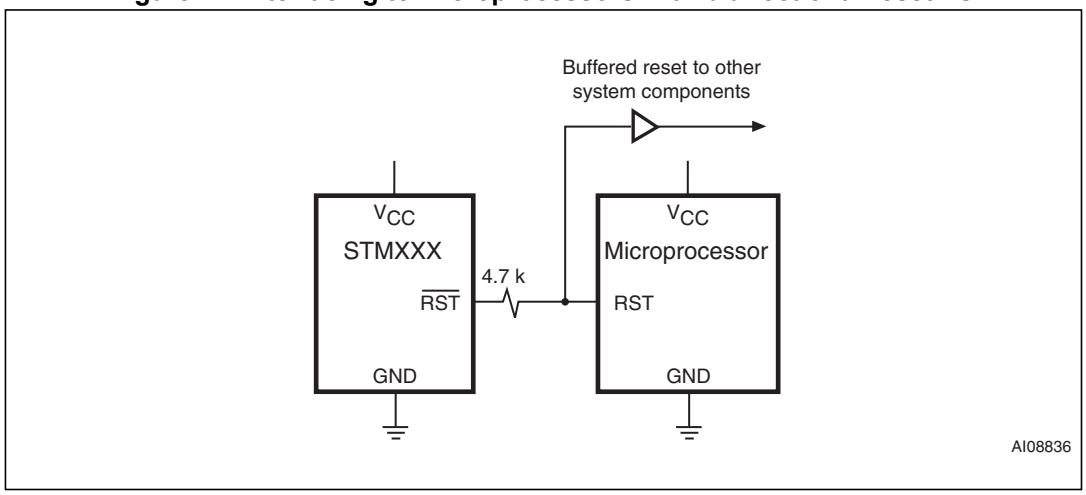

4 Typical operating characteristics

Typical values are at T_A = 25 °C.

Figure 12. Supply current vs. temperature (no load)

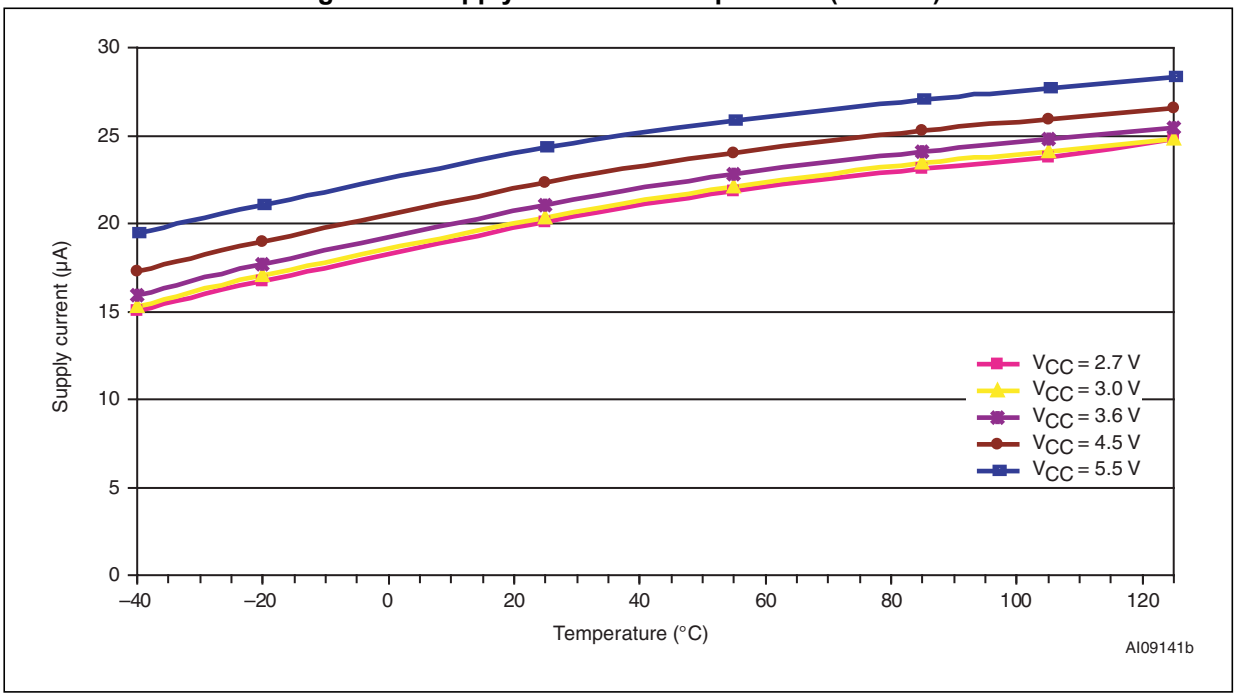

Figure 13. V_{PFI} threshold vs. temperature

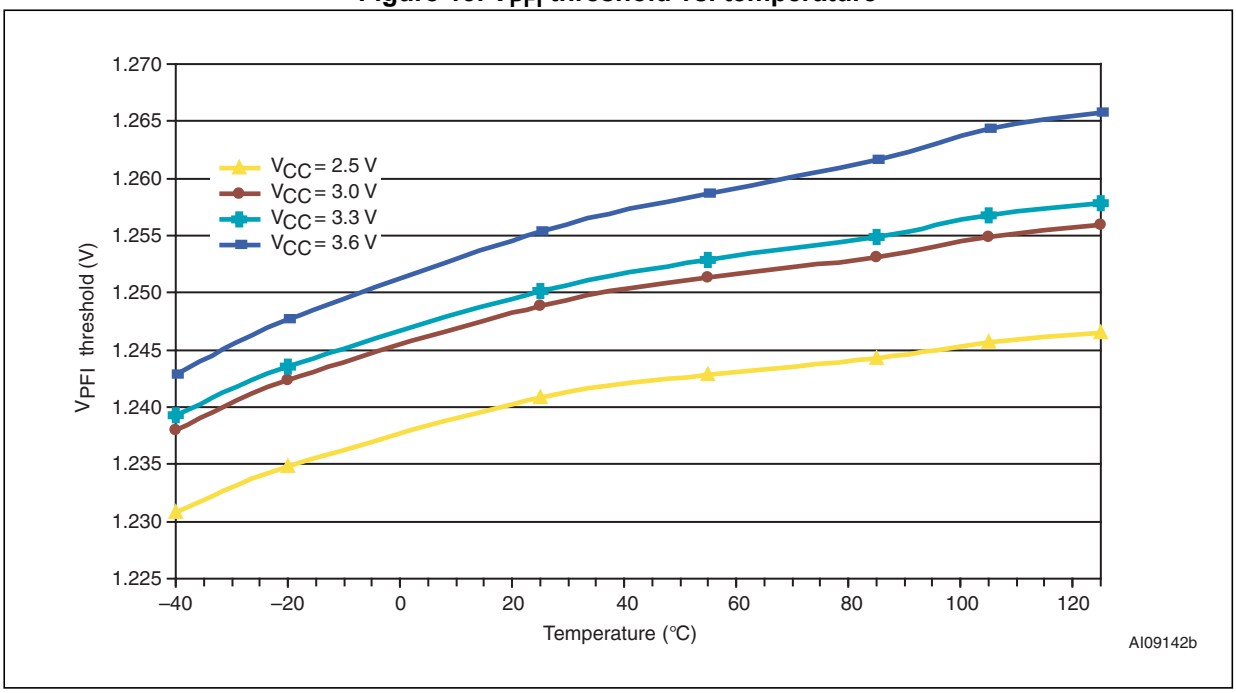

Figure 14. Reset comparator propagation delay vs. temperature

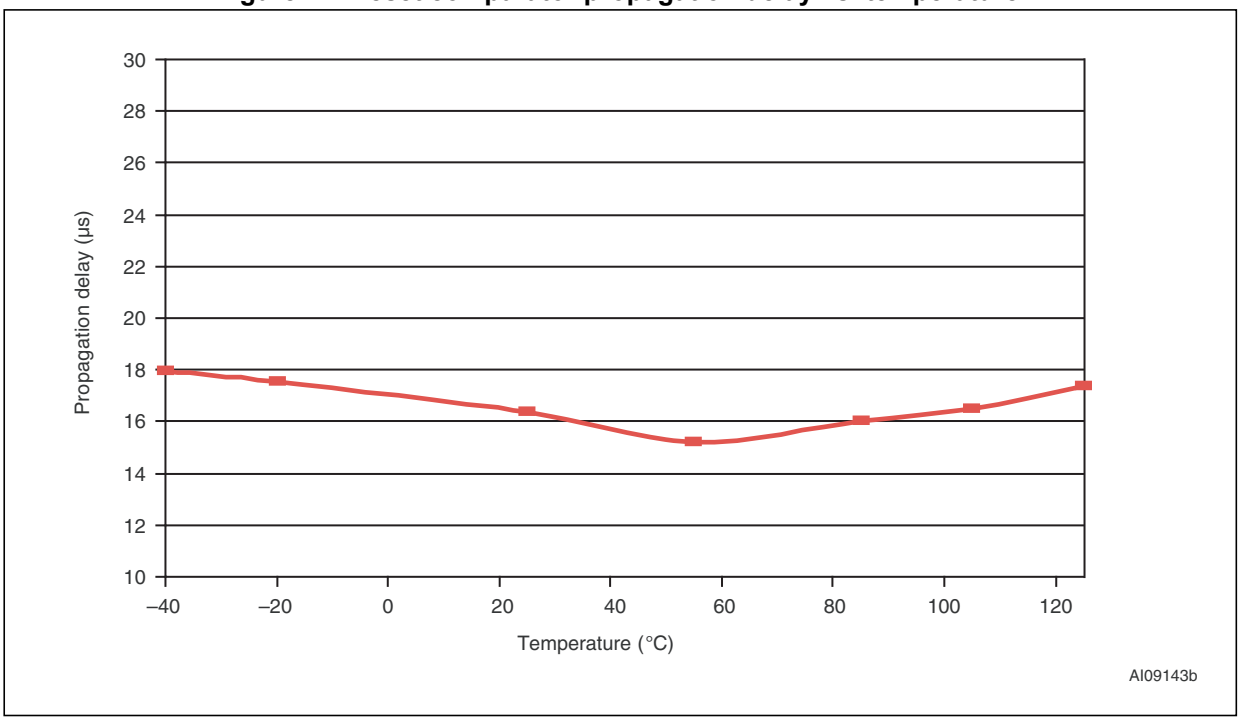

Figure 15. Power-up t_{rec} vs. temperature

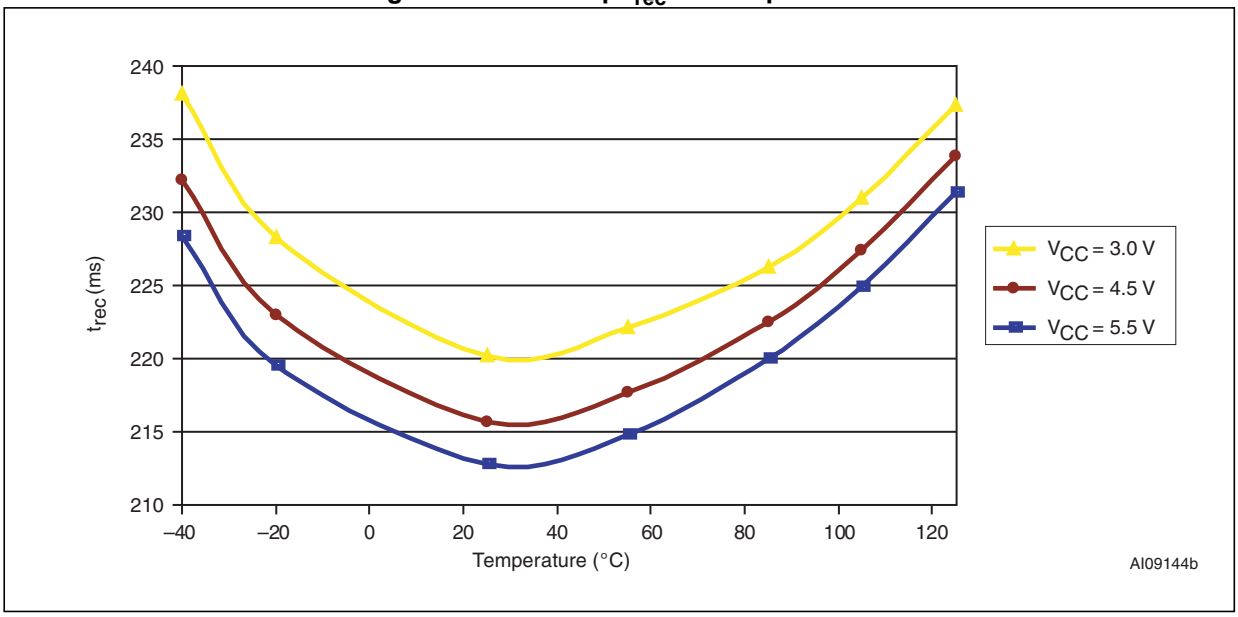

Figure 16. Normalized reset threshold vs. temperature

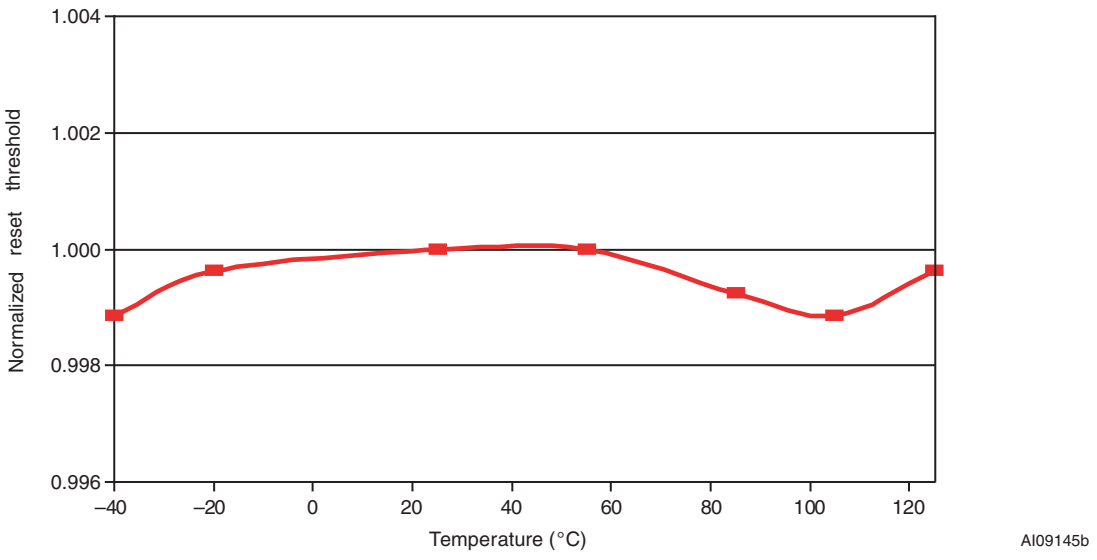

Figure 17. Watchdog time-out period vs. temperature

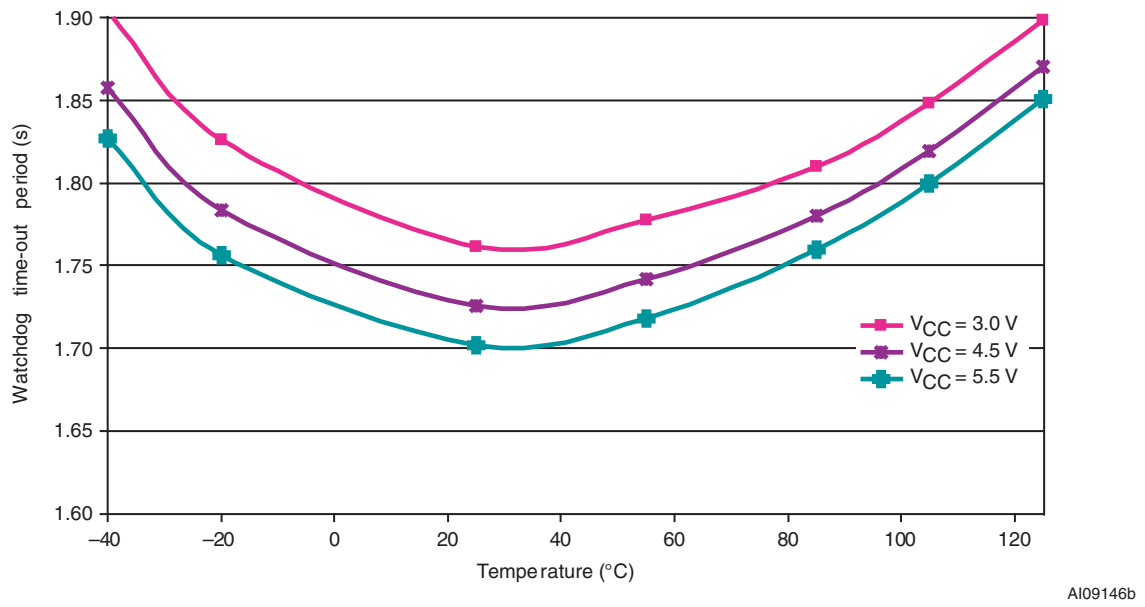

Figure 18. PFI to $\overline{PFO}$ propagation delay vs. temperature

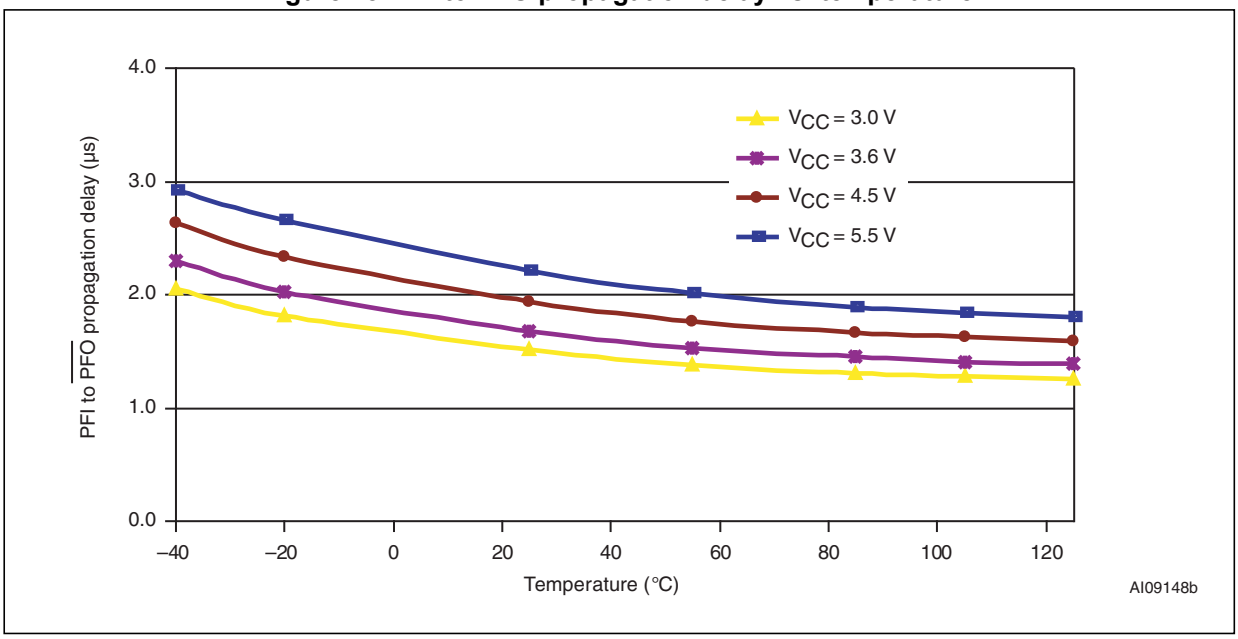

Figure 19. Output voltage vs. load current (V_{CC} = 5 V; T_A = 25 °C)

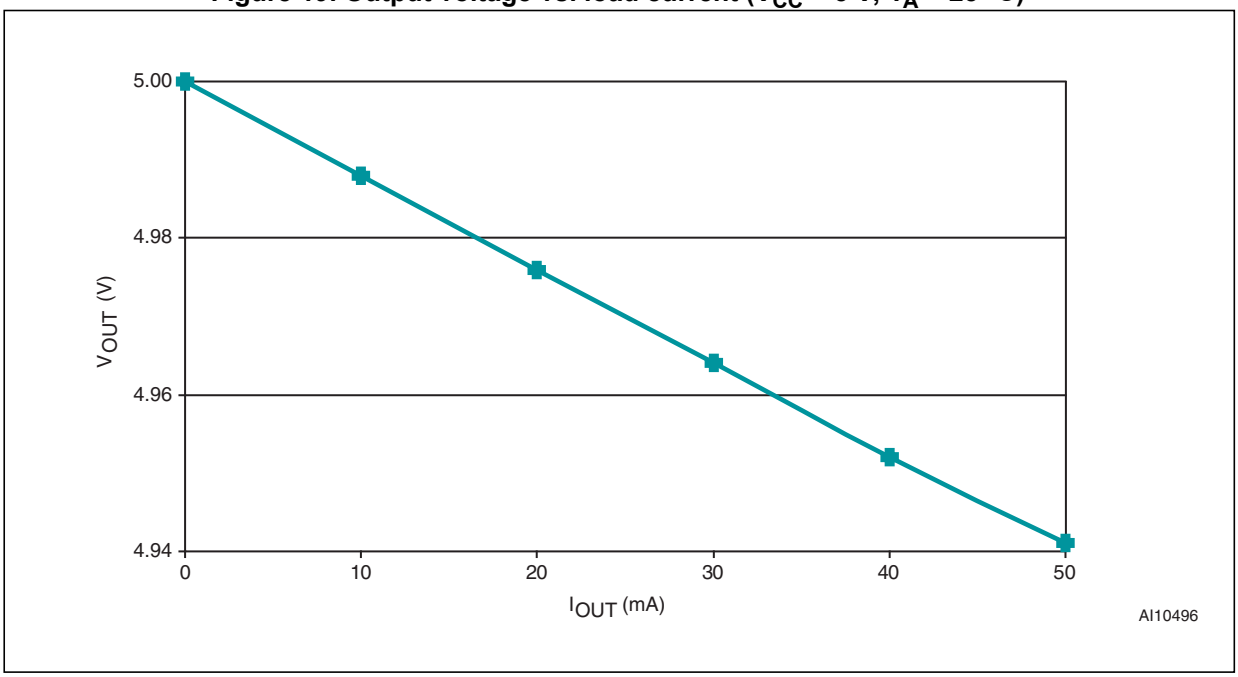

Figure 20. $\overline{RST}$ output voltage vs. supply voltage

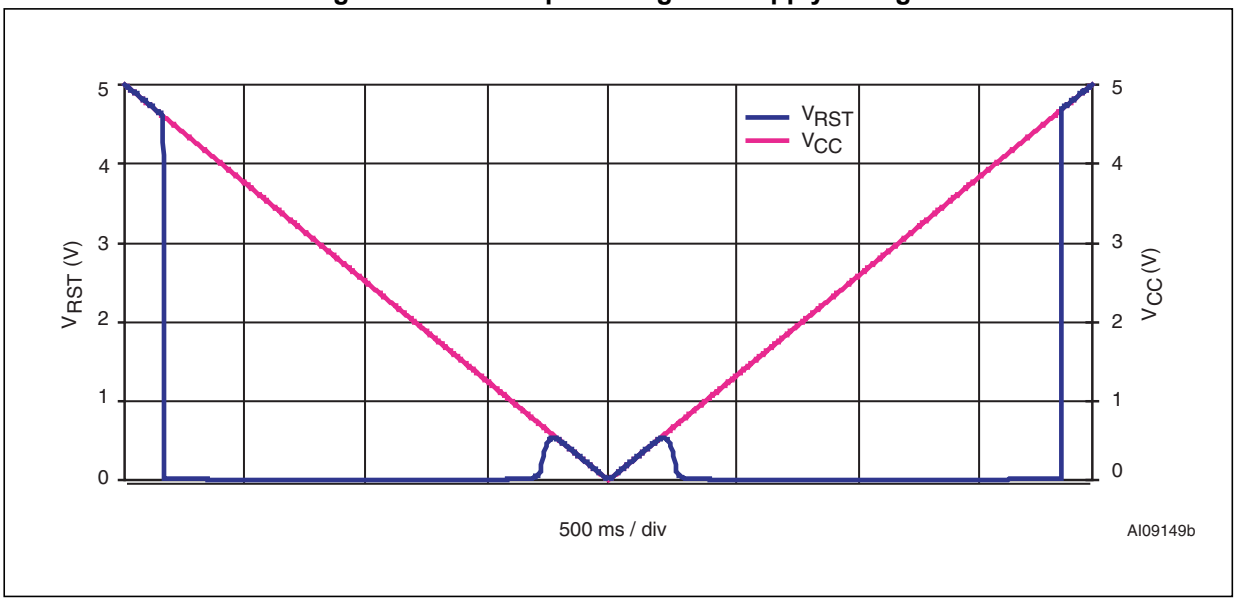

Figure 21. RST output voltage vs. supply voltage

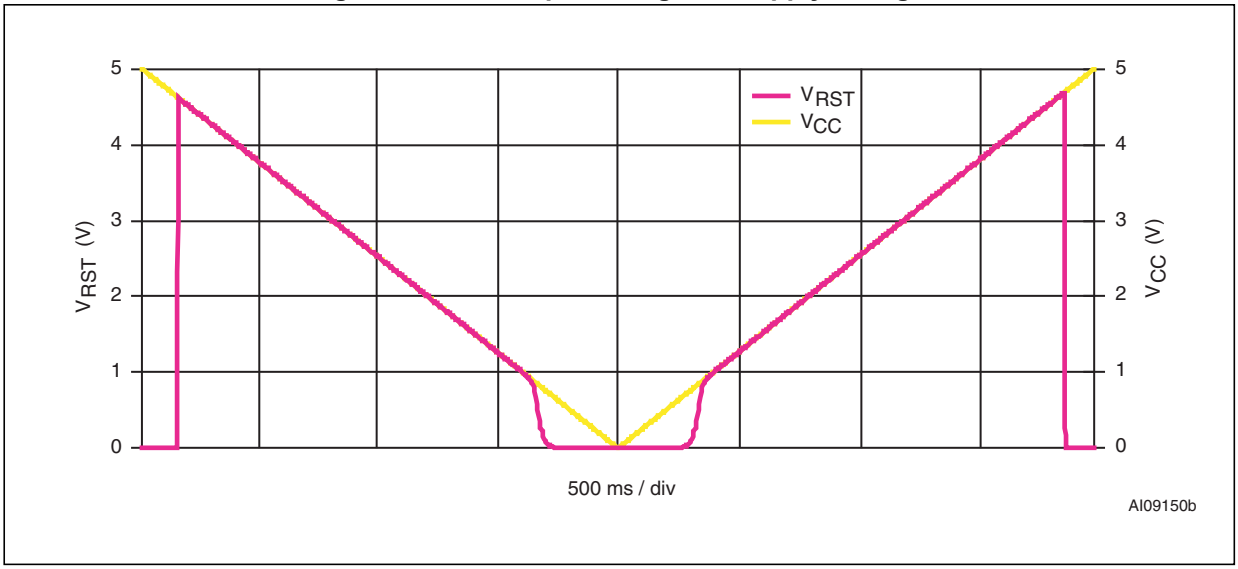

Figure 22. $\overline{RST}$ response time (assertion)

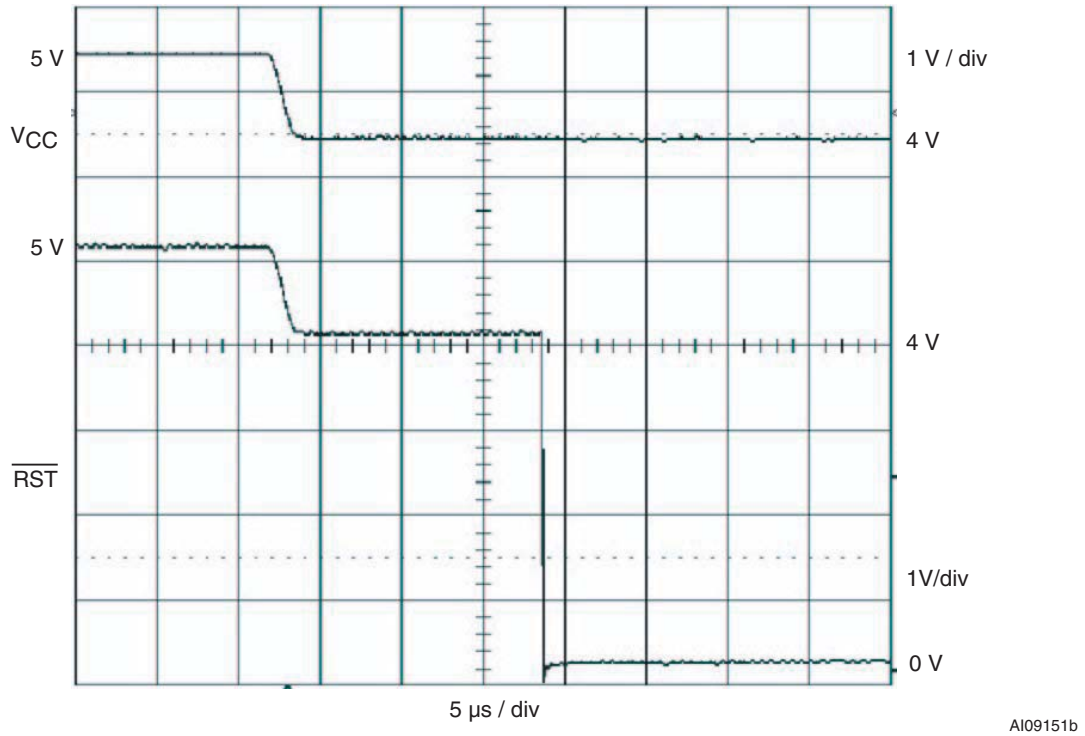

1. V_{RST} = 4.603 V at 25 °C.

Figure 23. RST response time (assertion)

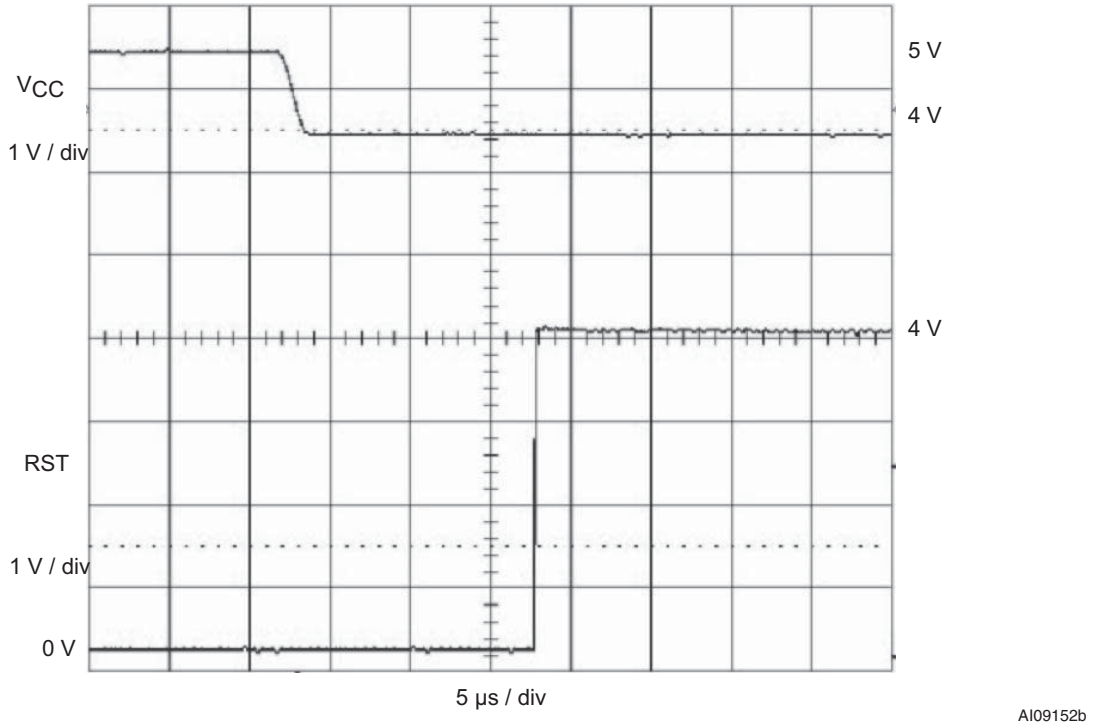

1. V_{RST} = 4.603 V at 25 °C.

Figure 24. Power-fail comparator response time (assertion)

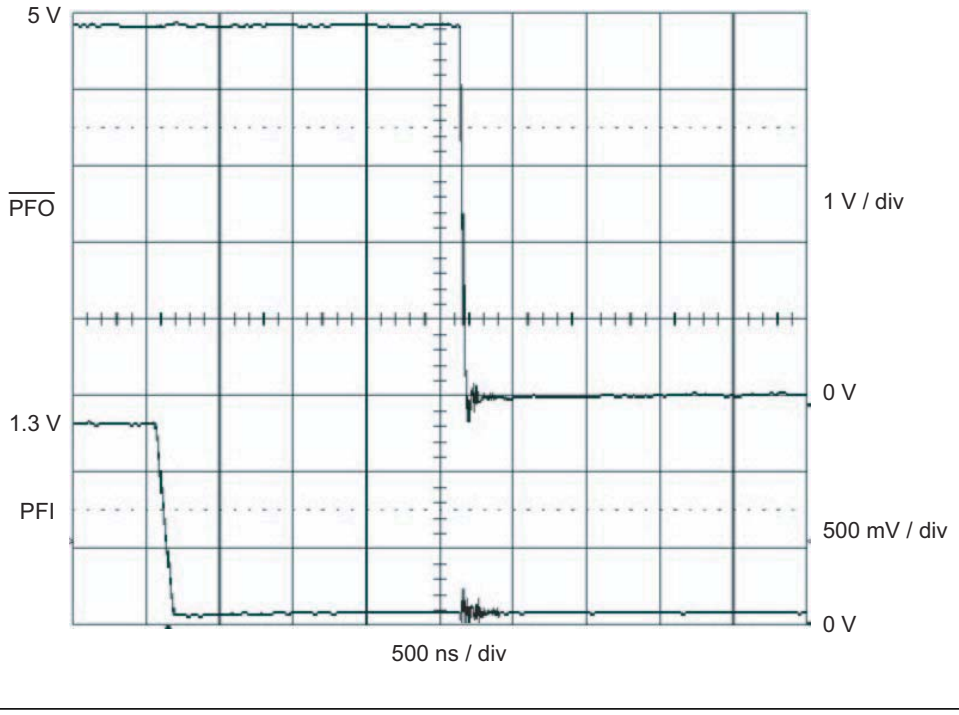

Figure 25. Power-fail comparator response time (de-assertion)

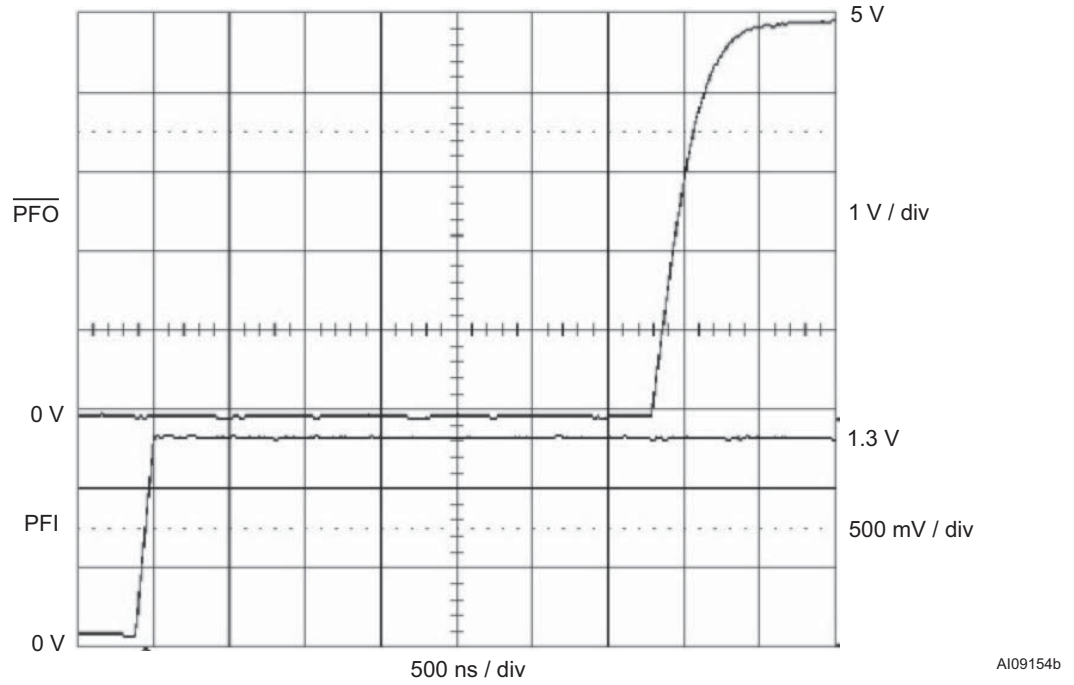

Figure 26. Maximum transient duration vs. reset threshold overdrive

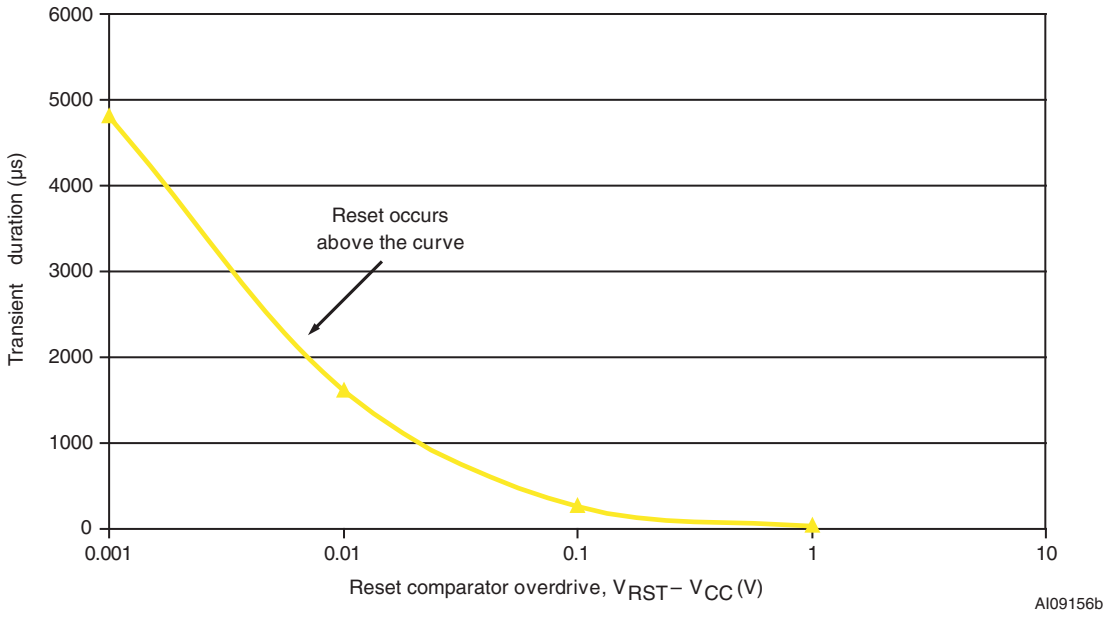

5 Maximum ratings

Stressing the device above the rating listed in the absolute maximum ratings table may cause permanent damage to the device. These are stress ratings only and operation of the device at these or any other conditions above those indicated in the operating sections of this specification is not implied. Exposure to absolute maximum rating conditions for extended periods may affect device reliability.

Table 4. Absolute maximum ratings

Symbol	Parameter	Value	Unit
T_{STG}	Storage temperature (V_{CC} Off)	–55 to 150	°C
T_{SLD}(1)	Lead solder temperature for 10 seconds	260	°C
V_{IO}	Input or output voltage	–0.3 to V_{CC} +0.3	V
V_{CC}	Supply voltage	–0.3 to 7.0	V
I_O	Output current	20	mA
P_D	Power dissipation	320	mW

1. Reflow at peak temperature of 260 °C. The time above 255 °C must not exceed 30 seconds.

6 DC and AC parameters

This section summarizes the operating and measurement conditions, and the DC and AC characteristics of the device. The parameters in the DC and AC characteristics tables that follow, are derived from tests performed under the measurement conditions summarized in *Table 5*. Designers should check that the operating conditions in their circuit match the operating conditions when relying on the quoted parameters.

Table 5. Operating and AC measurement conditions

Parameter	STM705/706/707/708; STM813L	Unit
V_{CC} supply voltage	1.0 to 5.5	V
Ambient operating temperature (T_A)	–40 to 85	°C
Input rise and fall times	$\leq$ 5	ns
Input pulse voltages	0.2 to 0.8 V_{CC}	V
Input and output timing ref. voltages	0.3 to 0.7 V_{CC}	V

Figure 27. AC testing input/output waveforms

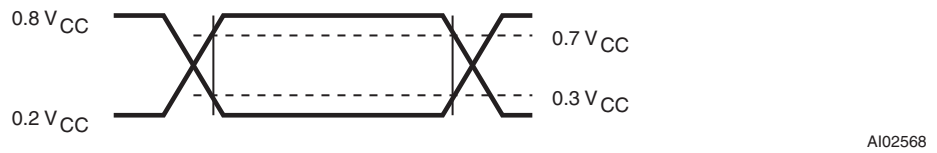

Figure 28. Power-fail comparator waveform

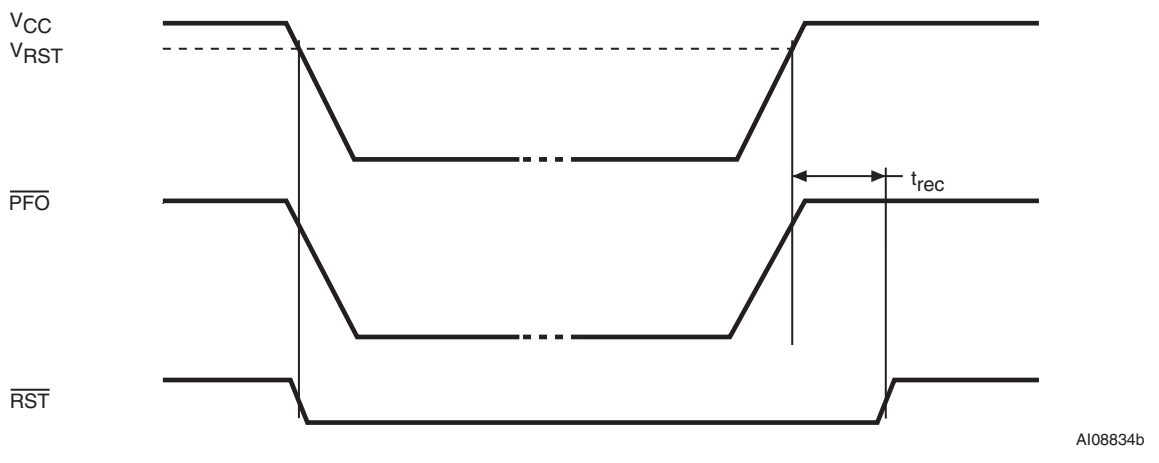

Figure 29. $\overline{MR}$ timing waveform

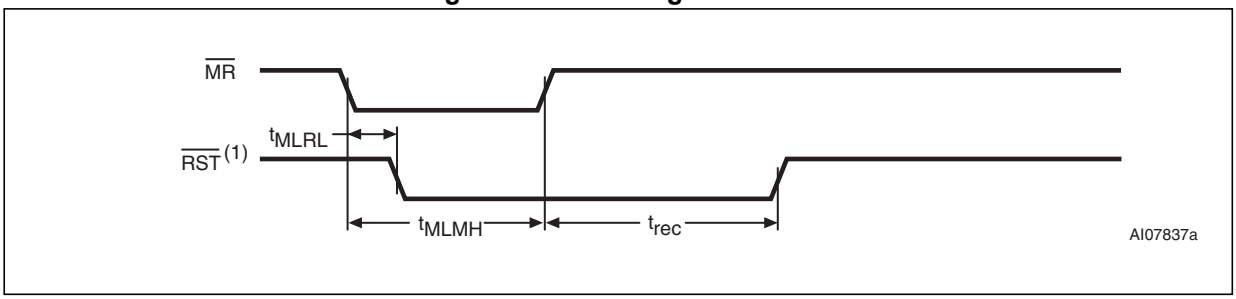

1. RST for STM805.

Figure 30. Watchdog timing (STM705/706/813L)

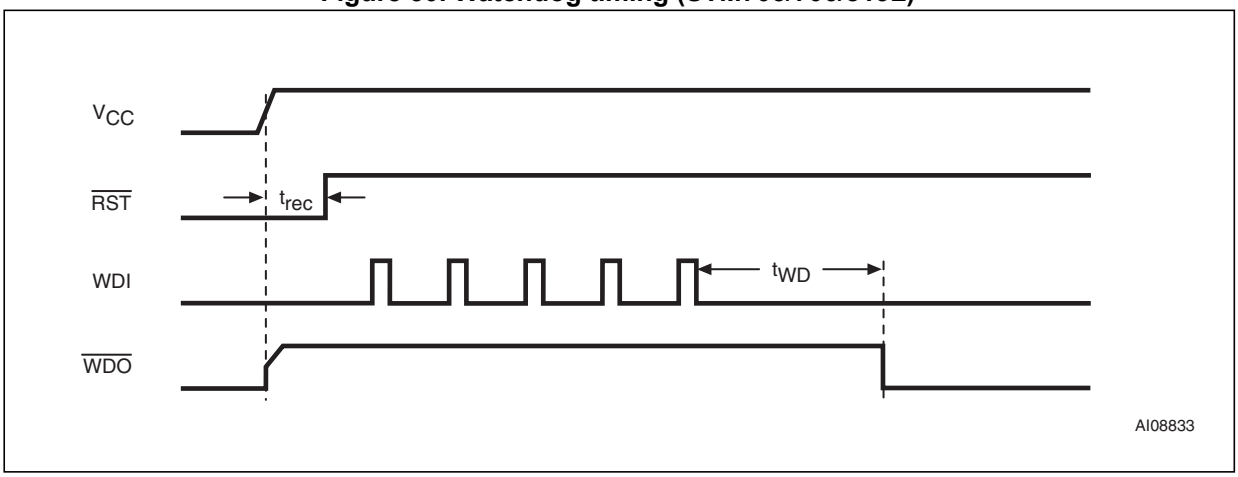

Table 6. DC and AC characteristics

Sym	Description	Test condition[1]	Min	Typ	Max	Unit
V_{CC}	Operating voltage		1.2[2]		5.5	V
I_{CC}	V_{CC} supply current			25	60	µA
I_{LI}	Input leakage current ($\overline{MR}$)	4.5 V < V_{CC} < 5.5 V	75	125	300	µA
	Input leakage current (PFI)	0 V < V_{IN} < V_{CC}	–25	2	+25	nA
	Input leakage current (WDI)	WDI = V_{CC}, time average		120	160	µA
		WDI = GND, time average	–20	–15		µA
V_{IH}	Input high voltage ($\overline{MR}$)	4.5 V < V_{CC} < 5.5 V	2.0			V
V_{IH}	Input high voltage (WDI)	V_{RST} (max) < V_{CC} < 5.5 V	0.7 V_{CC}			V
V_{IL}	Input low voltage ($\overline{MR}$)	4.5 V < V_{CC} < 5.5 V			0.8	V
V_{IL}	Input low voltage (WDI)	V_{RST} (max) < V_{CC} < 5.5 V			0.3 V_{CC}	V
V_{OL}	Output low voltage ($\overline{PFO}$, $\overline{RST}$, RST, $\overline{WDO}$)	V_{CC} = V_{RST} (max), I_{SINK} = 3.2 mA			0.3	V
V_{OL}	Output low voltage ($\overline{RST}$)	I_{SINK} = 50 µA, V_{CC} = 1.0 V, T_A = 0 °C to 85 °C			0.3	V
		I_{SINK} = 100 µA, V_{CC} = 1.2 V			0.3	V
V_{OH}	Output high voltage ($\overline{RST}$, RST, $\overline{WDO}$)	I_{SOURCE} = 1 mA, V_{CC} = V_{RST} (max)	2.4			V
	Output high voltage ($\overline{PFO}$)	I_{SOURCE} = 75 µA, V_{CC} = V_{RST} (max)	0.8 V_{CC}			V
V_{OH}	Output high voltage (RST)	I_{SOURCE} = 4 µA, V_{CC} = 1.1 V, T_A = 0 °C to 85 °C			0.8	V
		I_{SOURCE} = 4 µA, V_{CC} = 1.2 V			0.9	V
Power-fail comparator						
V_{PFI}	PFI input threshold	PFI falling (V_{CC} = 5 V)	1.20	1.25	1.30	V
t_{PFD}	PFI to $\overline{PFO}$ propagation delay			2		µs

Table 6. DC and AC characteristics

Sym	Description	Test condition[1]	Min	Typ	Max	Unit
Reset thresholds						
V_{RST}	Reset threshold[3]	STM705/707/813L	4.50	4.65	4.75	V
		STM706/708	4.25	4.40	4.50	V
	Reset threshold hysteresis			25		mV
t_{rec}	$\overline{RST}$ pulse width	Blank (see *Table 9*)	140	200	280	ms
		A (see *Table 9*)	160	200	280	
Push-button reset input						
t_{MLMH} (or t_{MR})	$\overline{MR}$ pulse width		150			ns
t_{MLRL} (t_{MRD})	$\overline{MR}$ to $\overline{RST}$ output delay				250	ns
Watchdog timer (STM705/706/813L)						
t_{WD}	Watchdog timeout period	4.5 V < V_{CC} < 5.5 V	1.12	1.60	2.24	s
	WDI pulse width	4.5 V < V_{CC} < 5.5 V	50			ns

1. Valid for ambient operating temperature: T_A = –40 to 85 °C; V_{CC} = 4.75 V to 5.5 V for STM705/707/813L; V_{CC} = 4.5 V to 5.5 V for STM706/708 (except where noted).
2. V_{CC} (min) = 1.0 V for T_A = 0 °C to +85 °C.
3. For V_{CC} falling.

7 Package mechanical data

In order to meet environmental requirements, ST offers these devices in different grades of ECOPACK® packages, depending on their level of environmental compliance. ECOPACK® specifications, grade definitions and product status are available at: *www.st.com*. ECOPACK® is an ST trademark.

Figure 31. SO8 – 8-lead plastic small outline, 150 mils body width, outline

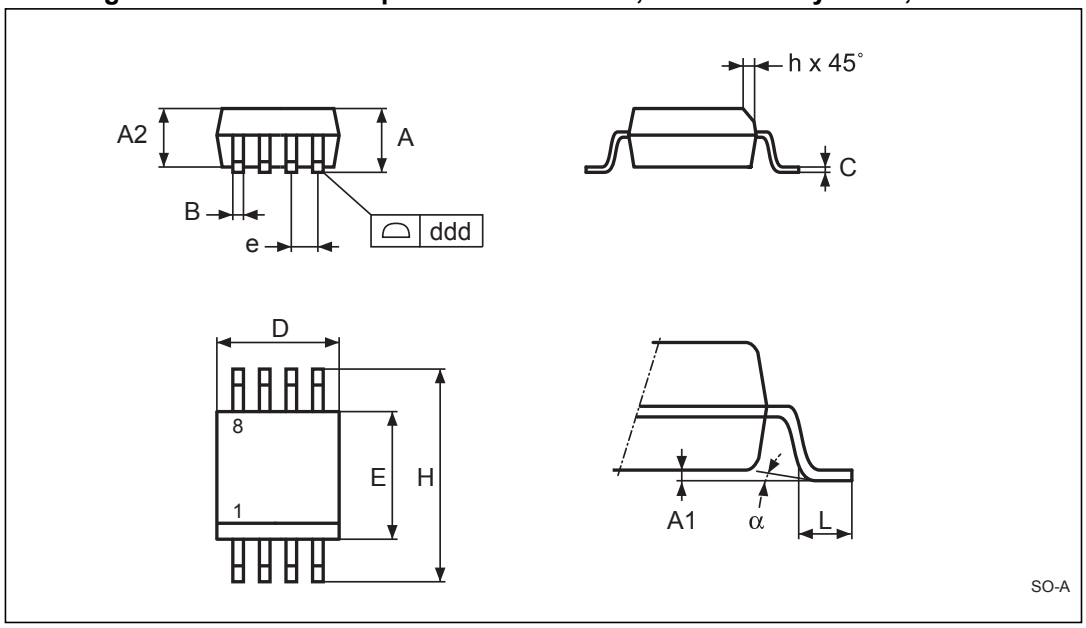

1. Drawing is not to scale.

Table 7. SO8 - 8-lead plastic small outline, 150 mils body width, pack. mech. data

Symbol	mm			inches		
	Typ	Min	Max	Typ	Min	Max
A	—	1.35	1.75	—	0.053	0.069
A1	—	0.10	0.25	—	0.004	0.010
B	—	0.33	0.51	—	0.013	0.020
C	—	0.19	0.25	—	0.007	0.010
D	—	4.80	5.00	—	0.189	0.197
ddd	—	—	0.10	—	—	0.004
E	—	3.80	4.00	—	0.150	0.157
e	1.27	—	—	0.050	—	—
H	—	5.80	6.20	—	0.228	0.244
h	—	0.25	0.50	—	0.010	0.020
L	—	0.40	0.90	—	0.016	0.035
α	—	0°	8°	—	0°	8°
N	8			8		

Figure 32. TSSOP8 – 8-lead, thin shrink small outline, 3 x 3 mm body size, outline

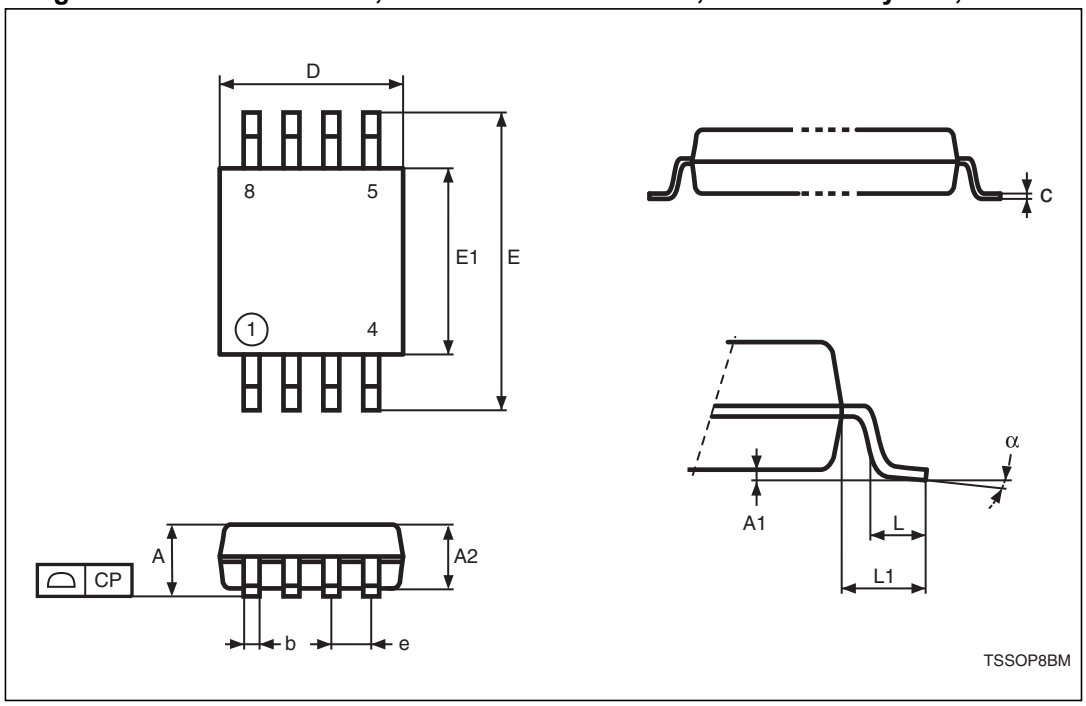

1. Drawing is not to scale.

Table 8. TSSOP8 - 8-lead, thin shrink small outline, 3 x 3 mm body size, mechanical data

Symbol	mm			inches		
	Typ	Min	Max	Typ	Min	Max
A	—	—	1.10	—	—	0.043
A1	—	0.05	0.15	—	0.002	0.006
A2	0.85	0.75	0.95	0.034	0.030	0.037
b	—	0.25	0.40	—	0.010	0.016
c	—	0.13	0.23	—	0.005	0.009
CP	—	—	0.10	—	—	0.004
D	3.00	2.90	3.10	0.118	0.114	0.122
e	0.65	—	—	0.026	—	—
E	4.90	4.65	5.15	0.193	0.183	0.203
E1	3.00	2.90	3.10	0.118	0.114	0.122
L	0.55	0.40	0.70	0.022	0.016	0.030
L1	0.95	—	—	0.037	—	—
α	—	0°	6°	—	0°	6°
N	8	8				

8 Part numbering

Table 9. Ordering information scheme

Example:	**STM705**	**Y**	**M**	**6**	**F**

Device type and reset threshold voltage

STM705/707/813L = V_{RST} = 4.50 V to 4.75 V
STM706/708 = V_{RST} = 4.25 V to 4.50 V

Y = automotive grade(1)(4)

$\overline{\text{RST}}$ pulse width

Blank = 140 to 280 ms
A(2) = 160 to 280 ms

Package

M = SO8
DS(3) = TSSOP8

Temperature range

6 = –40 to 85 °C
7 = –40 to 125 °C(4)

Shipping method

F = ECOPACK® package, tape and reel

1. Qualification and characterization according to AEC Q100 and Q003 or equivalent, advanced screening according to AEC Q001 & Q002 or equivalent.
2. Available for STM706/708 in SO8 (M) package only.
3. Contact local ST sales office for availability.
4. Available for the STM706 only.

For other options, or for more information on any aspect of this device, please contact the ST sales office nearest you.

Table 10. Marking description

Part number	Reset threshold	Package	Topside marking
STM705	4.63 V	SO8	705
		TSSOP8	
STM706	4.38 V	SO8	706[1]
		TSSOP8	
STM707	4.63 V	SO8	707
		TSSOP8	
STM708	4.38 V	SO8	708
		TSSOP8	
STM813L	4.63 V	SO8	813L
		TSSOP8	

1. The topside marking for the part number STM706YM7F is “706Y”.

9 Revision history

Table 11. Document revision history

Date	Revision	Changes
Sep-2003	1	Initial release.
31-Oct-2003	1.1	Update *Table 6*.
12-Dec-2003	2	Reformatted; update characteristics (*Figure 1*, *2*, *3*, *4*, *6*, *8*, *9*, *10*, *28*; *29*, *30*, *Table 7*, *9*, *11*)
16-Jan-2004	2.1	Add typical characteristics (*Figure 12* to *18*, *20* to *26*)
09-Apr-2004	3	Reformatted; update characteristics (*Figure 14*, *18*, *20* to *23*, *26*; *Table 7*)
25-May-2004	4	Update characteristics (*Table 4*, *7*)
02-Jul-2004	5	Document promoted; corrected waveform (*Figure 28*)
21-Sep-2004	6	Clarify root part numbers, pin descriptions (*Figure 2*, *3*, *10*; *Table 6*, *7*, *10*)
08-Mar-2005	7	Update typical characteristics (*Figure 12* to *26*)
02-Nov-2009	8	Updated *Table 1*, *3*, *4*, *6*, *9*, *Section 2.3*, *Section 2.7*, text in *Section 7*.
06-Aug-2010	9	Updated *Features*, *Section 4: Typical operating characteristics*,*Table 9*.
26-Mar-2014	10	Added automotive grade option for the STM706 to *Features*, *Table 1: Device summary*, and *Table 9: Ordering information scheme* Removed shipping option in tubes from *Table 9: Ordering information scheme* Added footnote *1* to *Table 10: Marking description*

Please Read Carefully:

Information in this document is provided solely in connection with ST products. STMicroelectronics NV and its subsidiaries (“ST”) reserve the right to make changes, corrections, modifications or improvements, to this document, and the products and services described herein at any time, without notice.

All ST products are sold pursuant to ST’s terms and conditions of sale.

Purchasers are solely responsible for the choice, selection and use of the ST products and services described herein, and ST assumes no liability whatsoever relating to the choice, selection or use of the ST products and services described herein.

No license, express or implied, by estoppel or otherwise, to any intellectual property rights is granted under this document. If any part of this document refers to any third party products or services it shall not be deemed a license grant by ST for the use of such third party products or services, or any intellectual property contained therein or considered as a warranty covering the use in any manner whatsoever of such third party products or services or any intellectual property contained therein.

UNLESS OTHERWISE SET FORTH IN ST’S TERMS AND CONDITIONS OF SALE ST DISCLAIMS ANY EXPRESS OR IMPLIED WARRANTY WITH RESPECT TO THE USE AND/OR SALE OF ST PRODUCTS INCLUDING WITHOUT LIMITATION IMPLIED WARRANTIES OF MERCHANTABILITY, FITNESS FOR A PARTICULAR PURPOSE (AND THEIR EQUIVALENTS UNDER THE LAWS OF ANY JURISDICTION), OR INFRINGEMENT OF ANY PATENT, COPYRIGHT OR OTHER INTELLECTUAL PROPERTY RIGHT.

ST PRODUCTS ARE NOT DESIGNED OR AUTHORIZED FOR USE IN: (A) SAFETY CRITICAL APPLICATIONS SUCH AS LIFE SUPPORTING, ACTIVE IMPLANTED DEVICES OR SYSTEMS WITH PRODUCT FUNCTIONAL SAFETY REQUIREMENTS; (B) AERONAUTIC APPLICATIONS; (C) AUTOMOTIVE APPLICATIONS OR ENVIRONMENTS, AND/OR (D) AEROSPACE APPLICATIONS OR ENVIRONMENTS. WHERE ST PRODUCTS ARE NOT DESIGNED FOR SUCH USE, THE PURCHASER SHALL USE PRODUCTS AT PURCHASER’S SOLE RISK, EVEN IF ST HAS BEEN INFORMED IN WRITING OF SUCH USAGE, UNLESS A PRODUCT IS EXPRESSLY DESIGNATED BY ST AS BEING INTENDED FOR “AUTOMOTIVE, AUTOMOTIVE SAFETY OR MEDICAL” INDUSTRY DOMAINS ACCORDING TO ST PRODUCT DESIGN SPECIFICATIONS. PRODUCTS FORMALLY ESCC, QML OR JAN QUALIFIED ARE DEEMED SUITABLE FOR USE IN AEROSPACE BY THE CORRESPONDING GOVERNMENTAL AGENCY.

Resale of ST products with provisions different from the statements and/or technical features set forth in this document shall immediately void any warranty granted by ST for the ST product or service described herein and shall not create or extend in any manner whatsoever, any liability of ST.

ST and the ST logo are trademarks or registered trademarks of ST in various countries.
Information in this document supersedes and replaces all information previously supplied.
The ST logo is a registered trademark of STMicroelectronics. All other names are the property of their respective owners.

© 2014 STMicroelectronics - All rights reserved

STMicroelectronics group of companies

Australia - Belgium - Brazil - Canada - China - Czech Republic - Finland - France - Germany - Hong Kong - India - Israel - Italy - Japan - Malaysia - Malta - Morocco - Philippines - Singapore - Spain - Sweden - Switzerland - United Kingdom - United States of America

www.st.com

Mouser Electronics

Authorized Distributor

Click to View Pricing, Inventory, Delivery & Lifecycle Information:

STMicroelectronics:
STM706M6F STM705M6F STM813LM6F STM708M6F STM707M6F STM705M6E STM706DS6F STM706M6E STM707M6E STM708M6E STM813LM6E STM706AM6F STM708RAM6F STM706YM7F