LEADERSHIP in Connector Design

KYCON

AUDIO JACKS

STX-3500 Series

RoHS

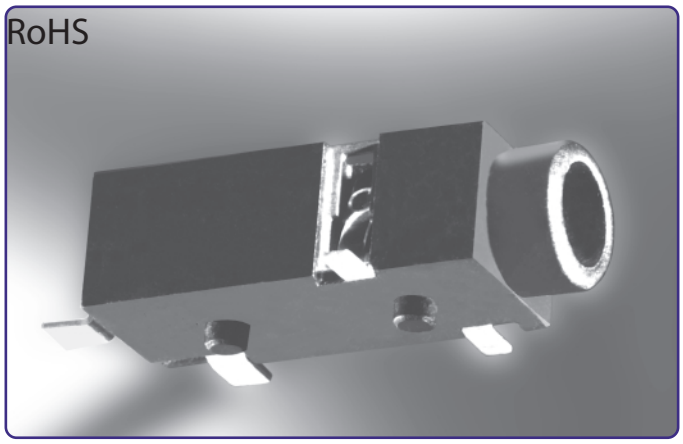

STX-3500 Series
Surface Mount 3.5mm Stereo Jack

Features

LR78160

- Audio Applications for Computers and Multimedia
- Surface Mount Design
- All Plastic
- CSA/NRTL Certified File No. LR78160

Performance Specifications

Materials and Finish

Housing : High Temperature Thermoplastic, Black Color
UL94V-0 Rated

Terminals : Copper Alloy, Silver over Nickel Plating

Mechanical Characteristics

Insertion Force : 3.0kg Max.
Extraction Force : 0.2kg Min.
Durability : 5000 Mating Cycles

Electrical Characteristics

Contact Resistance
Before Durability Test
50 Milliohms Max.
After Durability Test
100 Milliohms Max.

Rated Voltage : 16 V DC
Rated Current : 0.3 A

Insulation Resistance : 100 Megohms Min. at 500V DC

Dielectric Strength : 500V AC RMS for 1 Minute

Operating Temperature : -25°C to + 85°C

Documentation & Ordering Information

Drawing	Stock	CofC
Sample	Email	RFQ

Kycon Part #	STX-3500-3NTR

Part Number Builder

STX-3500	–	3	N	–		–	TR
Series		Number of Pins	Threading Option		PC 99 Option		Packaging

Series
STX-3500 - 3.5mm Surface Mount Audio Jack

Number of Pins
3 Pin
4 Pin
5 Pin

Threading Option
N - Non-Threaded

PC 99 Color Option
Blank - Standard
021C - Orange (available only with 3N Option)
235C - Burgundy (available only with 3N Option)
284C - Blue (available only with 3N and 4N Option)
577C - Lime (available only with 3N and 4N Option)
701C - Pink (available only with 3N and 4N Option)

Packaging
TR - Tape and Reel

Plating Option
G - Gold Plating (available only for part no **STX-3500-3N-GTR**)

STX- 3500 Series Dimensions
Dimensions in mm
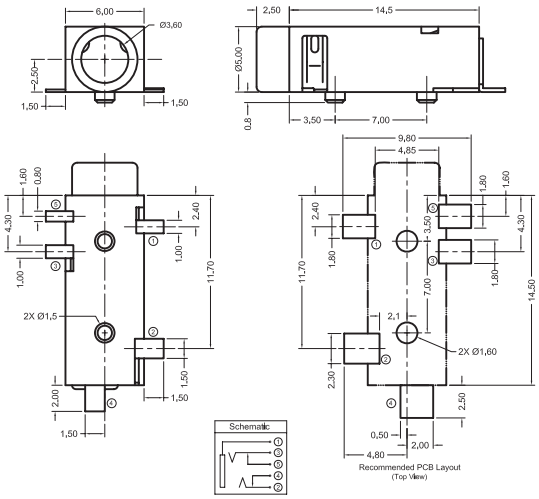
STX- 3500-5N