Driver Specification Sheet

Peerless by TYMPHANY

Model No: TC8FD02-04
Product Line: Tymphany

Rev: 1
Last Update: 2016-07-08 00:09:12

Product Description

TC woofer, 3 inch, paper cone, ferrite motor, steel basket, 4 ohm,replaced by TC8FD05-04

Mechanical Drawing

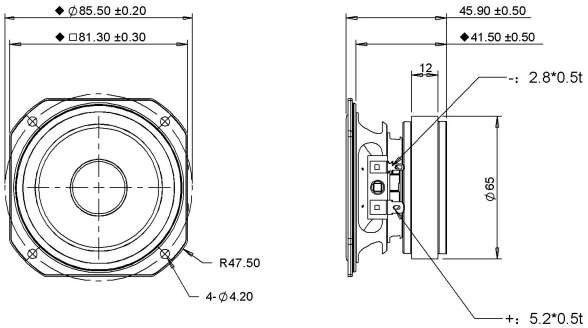

Specifications

DC Resistance	Revc	Ohms	2.81	5.0%	Energy Bandwidth Product	EBP	(1/Qes)*fs	
Minimum Impedance	Zmin	Ohms	3.18	7.5%	Moving Mass	Mms	g	2.2
Voice Coil Inductance	Le	mH	0.02		Suspension Compliance	Cms	um/N	395.3
Resonant Frequency	Fs	Hz	169.95	15%	Effective Cone diameter	D	cm	6.5
Mechanical Q Factor	Qms		3.79		Effective Piston Area	Sd	cm^2	33.2
Electrical Q Factor	Qes	1.16			Effective Volume	Vas	L	0.61
Total Q Factor	Qts		0.89		Motor Force Factor	BL	Tm	2.4
Ratio Fs/Qts	F	Fs/Qts	191.38		Motor Efficiency Factor	ß	(T*M^2)/Ohms	2
Half Space Sensitivity @2.83V	db@2.83V/1M	dB	89.11	+/- 1.0db	Voice coil former Material	VCfm		ASV
Half Space Sensitivity @1W/1M	db@1W/1M	dB	85.1	+/- 1.0db	Voice coil inner diameter	VCd	mm	19.43
Gap Height	Gh	mm	4		Rated Noise Power	P	W	25
Maximum Linear Excursion	Xmax	mm	1.6		Test Spectrum Bandwidth	120HZ-20KHZ		
Ferrofluid Type	FF				Driver Size	Inch	3 in	
Driver Mass	Kg	0.33						

Frequency and Impedance Response

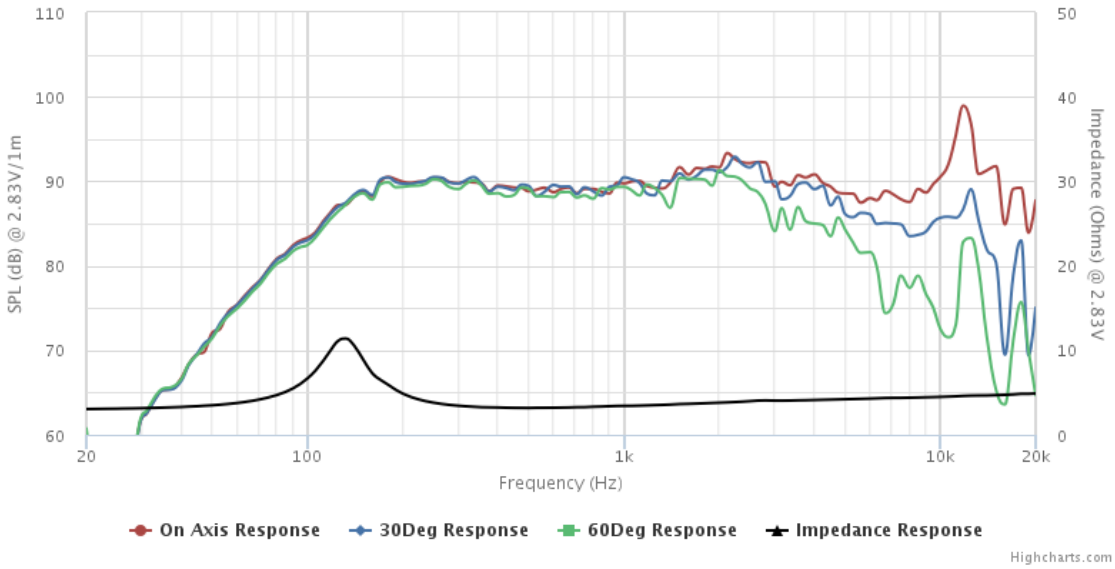

Tymphany HK LTD
Address : Room 1307-8 Dominion Centre, 43-59 Queens Rd East, Wanchai, Hong Kong
E-mail: sales@tymphany.com