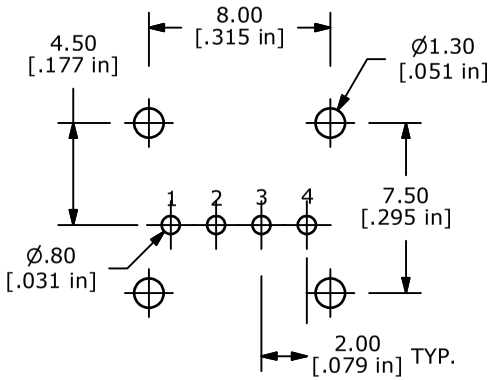

RECOMMENDED P.C.B. LAYOUT

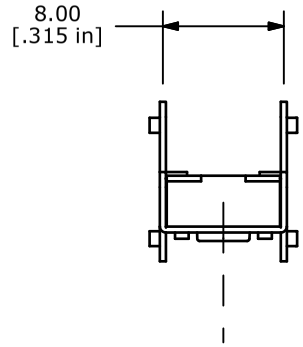

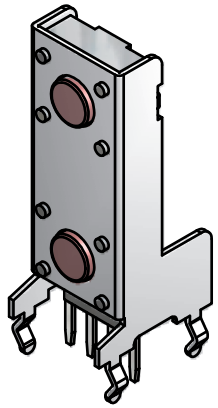

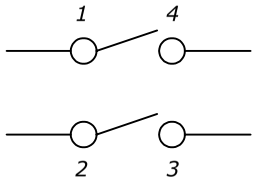

▲ CIRCUIT: SPST

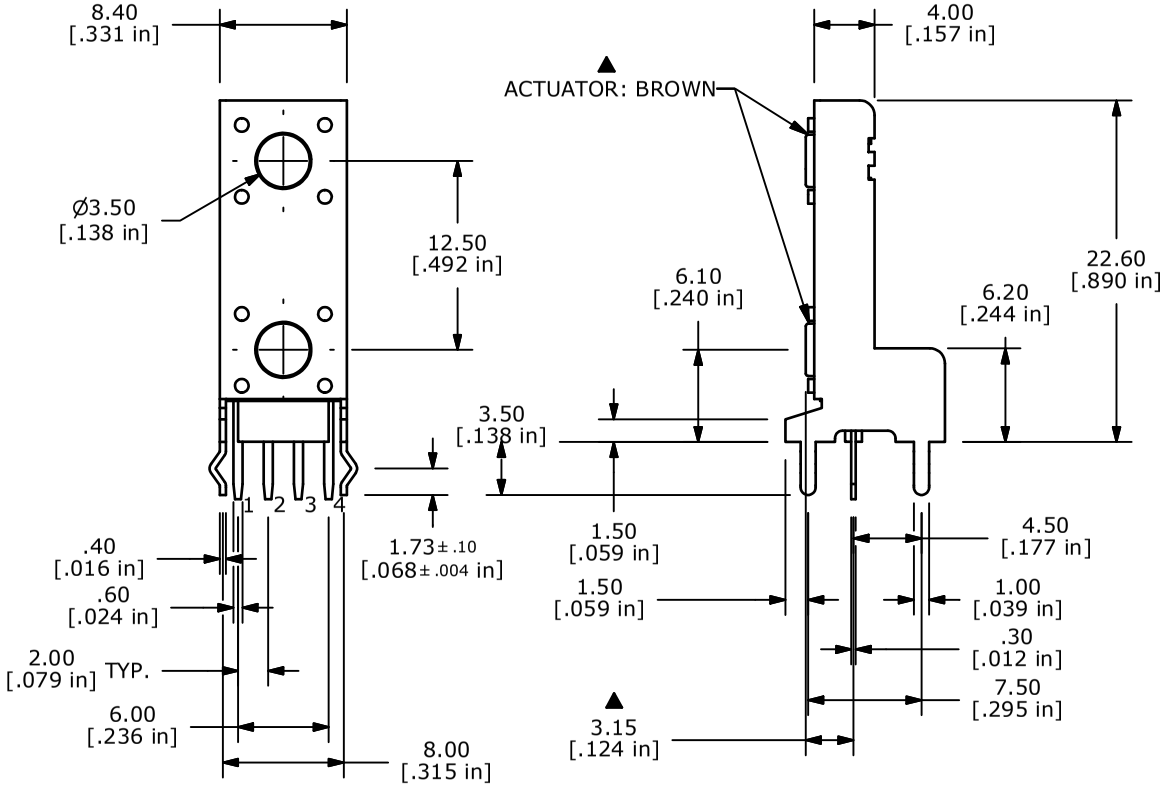

NOTES:
1. ALL DIMENSIONS IN MM
2. GENERAL TOLERANCE: X.X=±0.4
   X.XX=±0.25
3. TERM. NOS. FOR REFERENCE ONLY.
4. CONTACT RATING: 50mA @12VDC
5. TRAVEL: 0.25 +0.2/-0.1mm
6. CONTACT RESISTANCE: 100mILLI-OHMS Max.
7. OPERATING FORCE: 100±50gf (B)
▲8. CONTACT MATERIAL: SILVER
9.▲DENOTES CRITICAL PARAMETER.
▲10. ACTUATOR: 3.15 mm
▲11. PACKAGE: TRAY/ 200 PIECES PER
12. 2002/95/EC (ROHS) COMPLIANT

REV	PCR NO	DESCRIPTION	DATE	BY
B	19692	CORRECTED OPERATING FORCE	2/18/11	BGL
A	19630	RELEASED FOR PRODUCTION	1/31/11	BGL

THE INFORMATION CONTAINED IN THIS DOCUMENT IS PROPRIETARY TO E-SWITCH AND IS NOT TO BE COPIED OR TRANSFERRED

E-SWITCH™

TITLE TL53F100Q

SCALE	DATE	DR	DWG	REV
2:1	1/31/2011	BGL	P010693	B

Mouser Electronics

Authorized Distributor

Click to View Pricing, Inventory, Delivery & Lifecycle Information:

E-Switch:

TL53F100Q