Low Voltage Temperature Sensors

Data Sheet

TMP35/TMP36/TMP37

FEATURES

Low voltage operation (2.7 V to 5.5 V)
Calibrated directly in °C
10 mV/°C scale factor (20 mV/°C on TMP37)
±2°C accuracy over temperature (typ)
±0.5°C linearity (typ)
Stable with large capacitive loads
Specified −40°C to +125°C, operation to +150°C
Less than 50 µA quiescent current
Shutdown current 0.5 µA max
Low self-heating
Qualified for automotive applications

APPLICATIONS

Environmental control systems
Thermal protection
Industrial process control
Fire alarms
Power system monitors
CPU thermal management

GENERAL DESCRIPTION

The TMP35/TMP36/TMP37 are low voltage, precision centigrade temperature sensors. They provide a voltage output that is linearly proportional to the Celsius (centigrade) temperature. The TMP35/TMP36/TMP37 do not require any external calibration to provide typical accuracies of ±1°C at +25°C and ±2°C over the −40°C to +125°C temperature range.

The low output impedance of the TMP35/TMP36/TMP37 and its linear output and precise calibration simplify interfacing to temperature control circuitry and ADCs. All three devices are intended for single-supply operation from 2.7 V to 5.5 V maximum. The supply current runs well below 50 µA, providing very low self-heating—less than 0.1°C in still air. In addition, a shutdown function is provided to cut the supply current to less than 0.5 µA.

The TMP35 is functionally compatible with the LM35/LM45 and provides a 250 mV output at 25°C. The TMP35 reads temperatures from 10°C to 125°C. The TMP36 is specified from −40°C to +125°C, provides a 750 mV output at 25°C, and operates to 125°C from a single 2.7 V supply. The TMP36 is functionally compatible with the LM50. Both the TMP35 and TMP36 have an output scale factor of 10 mV/°C.

FUNCTIONAL BLOCK DIAGRAM

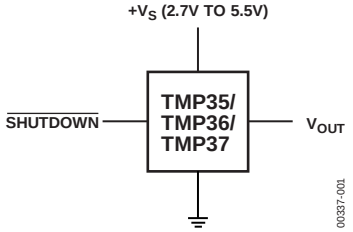

Figure 1.

PIN CONFIGURATIONS

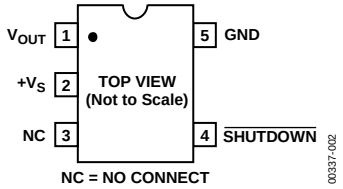

Figure 2. RJ-5 (SOT-23)

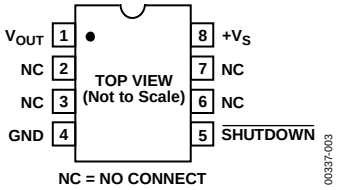

Figure 3. R-8 (SOIC_N)

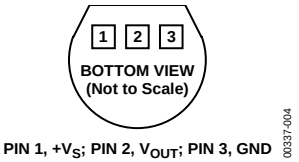

Figure 4. T-3 (TO-92)

The TMP37 is intended for applications over the range of 5°C to 100°C and provides an output scale factor of 20 mV/°C. The TMP37 provides a 500 mV output at 25°C. Operation extends to 150°C with reduced accuracy for all devices when operating from a 5 V supply.

The TMP35/TMP36/TMP37 are available in low cost 3-lead TO-92, 8-lead SOIC_N, and 5-lead SOT-23 surface-mount packages.

Rev. H Document Feedback

Information furnished by Analog Devices is believed to be accurate and reliable. However, no responsibility is assumed by Analog Devices for its use, nor for any infringements of patents or other rights of third parties that may result from its use. Specifications subject to change without notice. No license is granted by implication or otherwise under any patent or patent rights of Analog Devices. Trademarks and registered trademarks are the property of their respective owners.

One Technology Way, P.O. Box 9106, Norwood, MA 02062-9106, U.S.A.
Tel: 781.329.4700 **©1996–2015 Analog Devices, Inc. All rights reserved.**
Technical Support **www.analog.com**

TABLE OF CONTENTS

Features ... 1
Applications ... 1
General Description ... 1
Functional Block Diagram ... 1
Pin Configurations ... 1
Revision History ... 2
Specifications ... 3
Absolute Maximum Ratings ... 4
Thermal Resistance ... 4
ESD Caution ... 4
Typical Performance Characteristics ... 5
Functional Description ... 8
Applications Information ... 9
Shutdown Operation ... 9
Mounting Considerations ... 9
Thermal Environment Effects ... 9
Basic Temperature Sensor Connections ... 10
Fahrenheit Thermometers ... 10
Average and Differential Temperature Measurement ... 12
Microprocessor Interrupt Generator ... 13
Thermocouple Signal Conditioning with Cold-Junction Compensation ... 14
Using TMP35/TMP36/TMP37 Sensors in Remote Locations ... 15
Temperature to 4–20 mA Loop Transmitter ... 15
Temperature-to-Frequency Converter ... 16
Driving Long Cables or Heavy Capacitive Loads ... 17
Commentary on Long-Term Stability ... 17
Outline Dimensions ... 18
Ordering Guide ... 19
Automotive Products ... 19

REVISION HISTORY

5/15—Rev. G to Rev. H
Changed TMP3x to TMP35/TMP36/TMP37 ... Throughout
Changes to Figure 28 ... 12
Changes to Ordering Guide ... 19

11/13—Rev. F to Rev. G
Change to Table 1, Long-Term Stability Parameter ... 3
Change to Caption for Figure 38 ... 18
Changes to Ordering Guide ... 19

11/10—Rev. E to Rev. F
Changes to Features ... 1
Updated Outline Dimensions ... 18
Changes to Ordering Guide ... 19
Added Automotive Products Section ... 20

8/08—Rev. D to Rev. E
Updated Outline Dimensions ... 18
Changes to Ordering Guide ... 19

3/05—Rev. C to Rev. D
Updated Format ... Universal
Changes to Specifications ... 3
Additions to Absolute Maximum Ratings ... 4
Updated Outline Dimensions ... 18
Changes to Ordering Guide ... 19

10/02—Rev. B to Rev. C
Changes to Specifications ... 3
Deleted Text from Commentary on Long-Term Stability Section ... 13
Updated Outline Dimensions ... 14

9/01—Rev. A to Rev. B
Edits to Specifications ... 2
Addition of New Figure 1 ... 2
Deletion of Wafer Test Limits Section ... 3

6/97—Rev. 0 to Rev. A

3/96—Revision 0: Initial Version

SPECIFICATIONS

V_S = 2.7 V to 5.5 V, −40°C ≤ T_A ≤ +125°C, unless otherwise noted.

Table 1.

Parameter[1]	Symbol	Test Conditions/Comments	Min	Typ	Max	Unit
ACCURACY						
TMP35/TMP36/TMP37 (F Grade)		T_A = 25°C		±1	±2	°C
TMP35/TMP36/TMP37 (G Grade)		T_A = 25°C		±1	±3	°C
TMP35/TMP36/TMP37 (F Grade)		Over rated temperature		±2	±3	°C
TMP35/TMP36/TMP37 (G Grade)		Over rated temperature		±2	±4	°C
Scale Factor, TMP35		10°C ≤ T_A ≤ 125°C		10		mV/°C
Scale Factor, TMP36		−40°C ≤ T_A ≤ +125°C		10		mV/°C
Scale Factor, TMP37		5°C ≤ T_A ≤ 85°C		20		mV/°C
		5°C ≤ T_A ≤ 100°C		20		mV/°C
		3.0 V ≤ V_S ≤ 5.5 V				
Load Regulation		0 µA ≤ I_L ≤ 50 µA				
		−40°C ≤ T_A ≤ +105°C		6	20	m°C/µA
		−105°C ≤ T_A ≤ +125°C		25	60	m°C/µA
Power Supply Rejection Ratio	PSRR	T_A = 25°C		30	100	m°C/V
		3.0 V ≤ V_S ≤ 5.5 V		50		m°C/V
Linearity				0.5		°C
Long-Term Stability		T_A = 150°C for 1000 hours		0.4		°C
SHUTDOWN						
Logic High Input Voltage	V_{IH}	V_S = 2.7 V	1.8			V
Logic Low Input Voltage	V_{IL}	V_S = 5.5 V			400	mV
OUTPUT						
TMP35 Output Voltage		T_A = 25°C		250		mV
TMP36 Output Voltage		T_A = 25°C		750		mV
TMP37 Output Voltage		T_A = 25°C		500		mV
Output Voltage Range			100		2000	mV
Output Load Current	I_L		0		50	µA
Short-Circuit Current	I_{SC}	Note 2			250	µA
Capacitive Load Driving	C_L	No oscillations[2]	1000	10000		pF
Device Turn-On Time		Output within ±1°C, 100 kΩ||100 pF load[2]		0.5	1	ms
POWER SUPPLY						
Supply Range	V_S		2.7		5.5	V
Supply Current	I_{SY} (ON)	Unloaded			50	µA
Supply Current (Shutdown)	I_{SY} (OFF)	Unloaded		0.01	0.5	µA

[1] Does not consider errors caused by self-heating.
[2] Guaranteed but not tested.

ABSOLUTE MAXIMUM RATINGS

Table 2.

Parameter[1, 2]	Rating
Supply Voltage	7 V
Shutdown Pin	GND ≤ $\overline{\text{SHUTDOWN}}$ ≤ $+V_S$
Output Pin	GND ≤ V_{OUT} ≤ $+V_S$
Operating Temperature Range	−55°C to +150°C
Die Junction Temperature	175°C
Storage Temperature Range	−65°C to +160°C
IR Reflow Soldering	
Peak Temperature	220°C (0°C/5°C)
Time at Peak Temperature Range	10 sec to 20 sec
Ramp-Up Rate	3°C/sec
Ramp-Down Rate	−6°C/sec
Time 25°C to Peak Temperature	6 min
IR Reflow Soldering—Pb-Free Package	
Peak Temperature	260°C (0°C)
Time at Peak Temperature Range	20 sec to 40 sec
Ramp-Up Rate	3°C/sec
Ramp-Down Rate	−6°C/sec
Time 25°C to Peak Temperature	8 min

[1] Digital inputs are protected; however, permanent damage can occur on unprotected units from high energy electrostatic fields. Keep units in conductive foam or packaging at all times until ready to use. Use proper antistatic handling procedures.
[2] Remove power before inserting or removing units from their sockets.

Stresses at or above those listed under Absolute Maximum Ratings may cause permanent damage to the product. This is a stress rating only; functional operation of the product at these or any other conditions above those indicated in the operational section of this specification is not implied. Operation beyond the maximum operating conditions for extended periods may affect product reliability.

THERMAL RESISTANCE

θ_{JA} is specified for the worst-case conditions, that is, a device in socket.

Table 3. Thermal Resistance

Package Type	θ_{JA}	θ_{JC}	Unit
TO-92 (T-3-1)	162	120	°C/W
SOIC_N (R-8)	158	43	°C/W
SOT-23 (RJ-5)	300	180	°C/W

ESD CAUTION

ESD (electrostatic discharge) sensitive device. Charged devices and circuit boards can discharge without detection. Although this product features patented or proprietary protection circuitry, damage may occur on devices subjected to high energy ESD. Therefore, proper ESD precautions should be taken to avoid performance degradation or loss of functionality.

TYPICAL PERFORMANCE CHARACTERISTICS

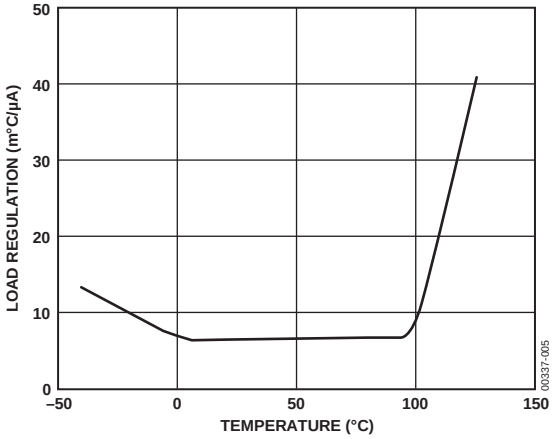

Figure 5. Load Regulation vs. Temperature (m°C/µA)

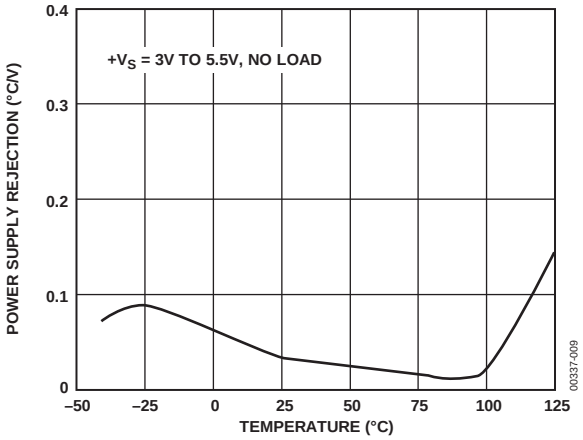

Figure 8. Power Supply Rejection vs. Temperature

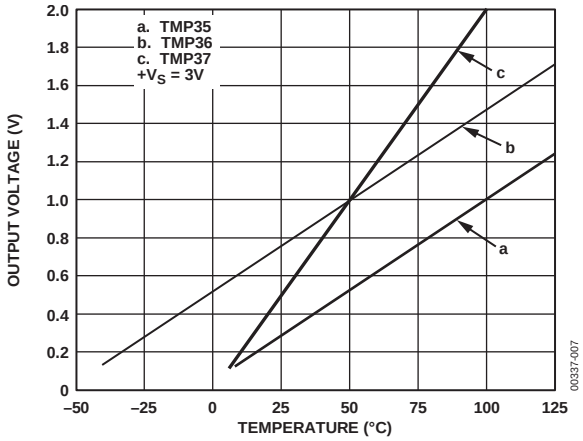

Figure 6. Output Voltage vs. Temperature

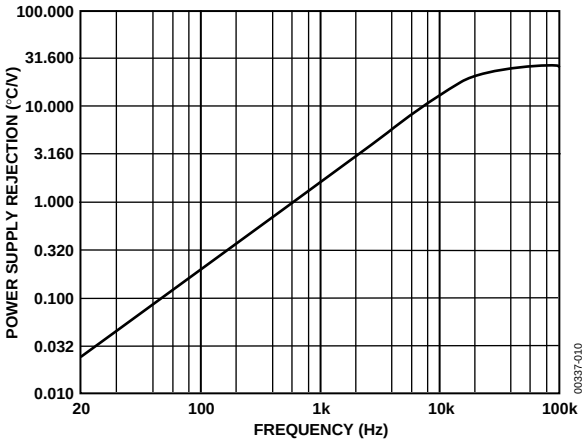

Figure 9. Power Supply Rejection vs. Frequency

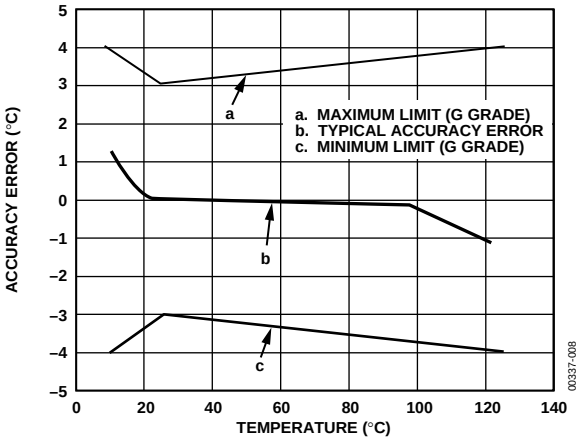

Figure 7. Accuracy Error vs. Temperature

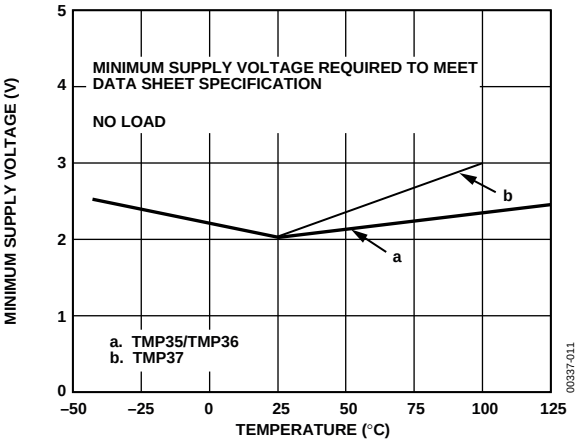

Figure 10. Minimum Supply Voltage vs. Temperature

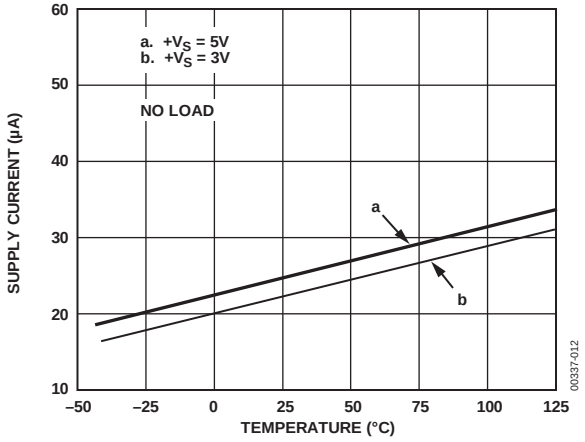

Figure 11. Supply Current vs. Temperature

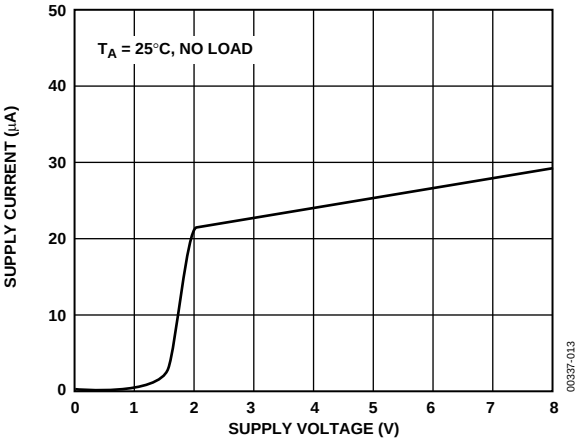

Figure 12. Supply Current vs. Supply Voltage

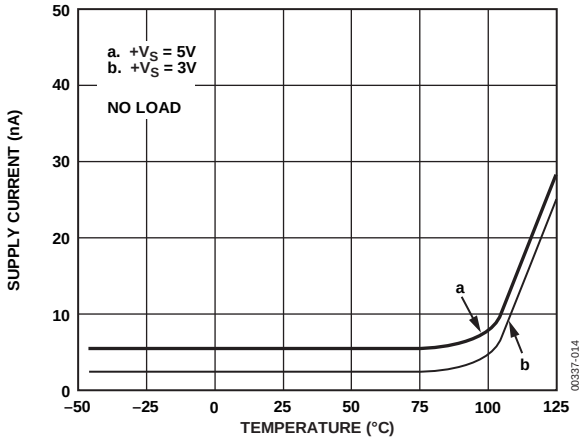

Figure 13. Supply Current vs. Temperature (Shutdown = 0 V)

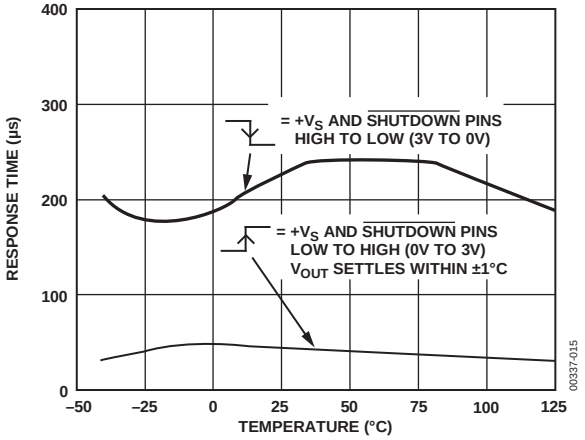

Figure 14. V_{OUT} Response Time for $+V_S$ Power-Up/Power-Down vs. Temperature

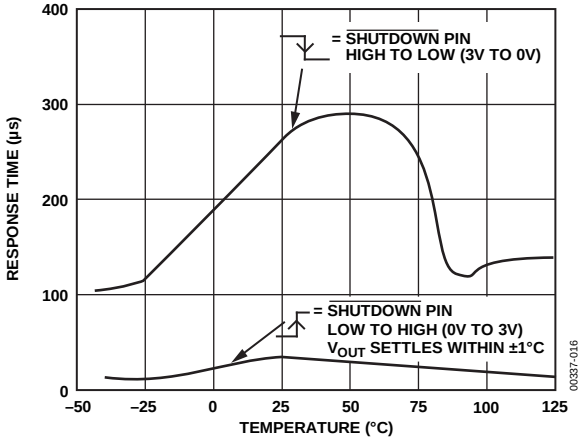

Figure 15. V_{OUT} Response Time for $\overline{SHUTDOWN}$ Pin vs. Temperature

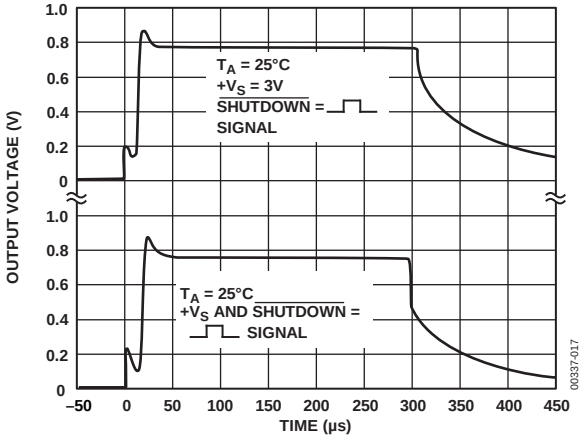

Figure 16. V_{OUT} Response Time to $\overline{SHUTDOWN}$ Pin and $+V_S$ Pin vs. Time

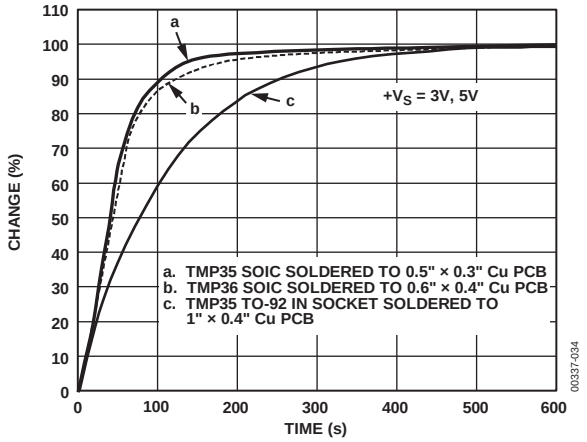

Figure 17. Thermal Response Time in Still Air

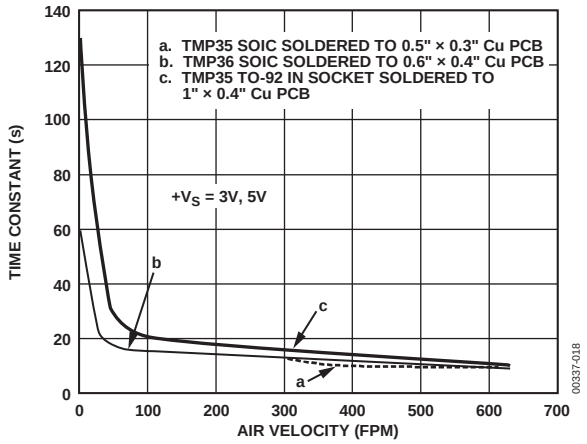

Figure 18. Thermal Response Time Constant in Forced Air

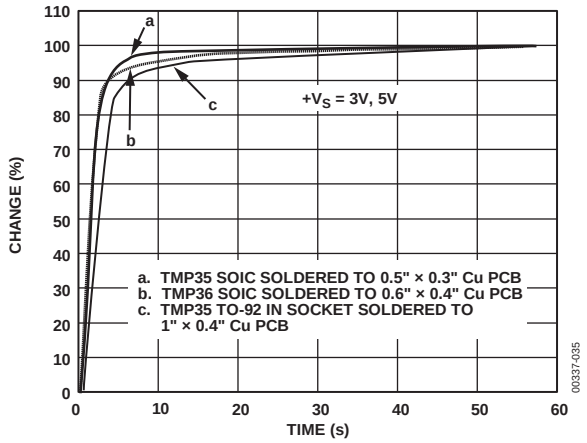

Figure 19. Thermal Response Time in Stirred Oil Bath

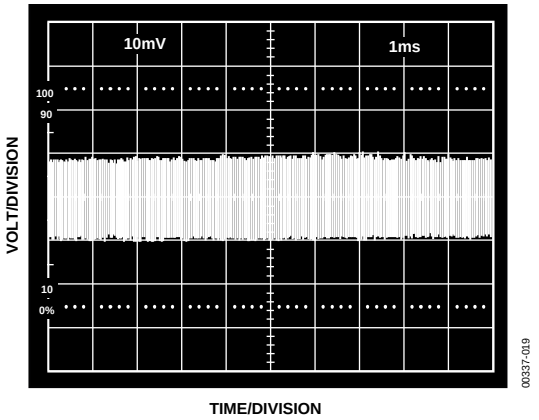

Figure 20. Temperature Sensor Wideband Output Noise Voltage; Gain = 100, BW = 157 kHz

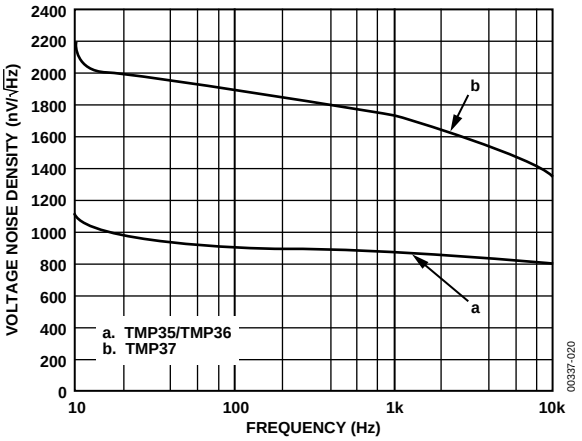

Figure 21. Voltage Noise Spectral Density vs. Frequency

FUNCTIONAL DESCRIPTION

An equivalent circuit for the TMP35/TMP36/TMP37 micropower, centigrade temperature sensors is shown in Figure 22. The core of the temperature sensor is a band gap core that comprises transistors Q1 and Q2, biased by Q3 to approximately 8 µA. The band gap core operates both Q1 and Q2 at the same collector current level; however, because the emitter area of Q1 is 10 times that of Q2, the V_{BE} of Q1 and the V_{BE} of Q2 are not equal by the following relationship:

$$\Delta V_{BE} = V_T \times \ln\left(\frac{A_{E,Q1}}{A_{E,Q2}}\right)$$

Resistors R1 and R2 are used to scale this result to produce the output voltage transfer characteristic of each temperature sensor and, simultaneously, R2 and R3 are used to scale the V_{BE} of Q1 as an offset term in V_{OUT}. Table 4 summarizes the differences in the output characteristics of the three temperature sensors.

The output voltage of the temperature sensor is available at the emitter of Q4, which buffers the band gap core and provides load current drive. The current gain of Q4, working with the available base current drive from the previous stage, sets the short-circuit current limit of these devices to 250 µA.

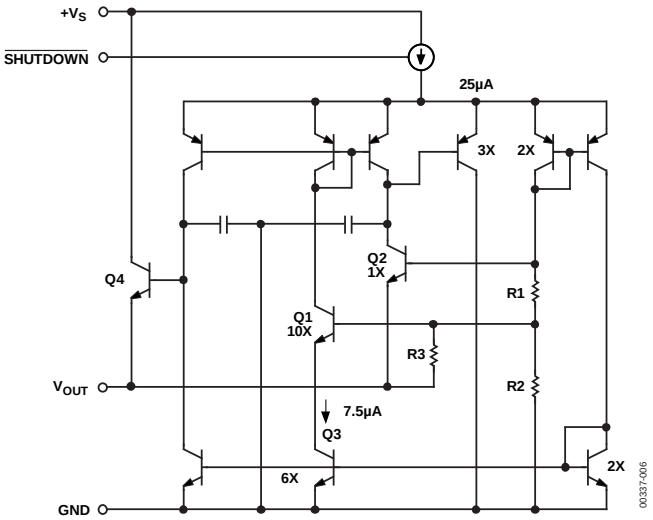

Figure 22. Temperature Sensor Simplified Equivalent Circuit

Table 4. TMP35/TMP36/TMP37 Output Characteristics

Sensor	Offset Voltage (V)	Output Voltage Scaling (mV/°C)	Output Voltage at 25°C (mV)
TMP35	0	10	250
TMP36	0.5	10	750
TMP37	0	20	500

APPLICATIONS INFORMATION

SHUTDOWN OPERATION

All TMP35/TMP36/TMP37 devices include a shutdown capability, which reduces the power supply drain to less than 0.5 µA maximum. This feature, available only in the SOIC_N and the SOT-23 packages, is TTL/CMOS level-compatible, provided that the temperature sensor supply voltage is equal in magnitude to the logic supply voltage. Internal to the TMP35/TMP36/TMP37 at the $\overline{\text{SHUTDOWN}}$ pin, a pull-up current source to $+V_S$ is connected. This allows the $\overline{\text{SHUTDOWN}}$ pin to be driven from an open-collector/drain driver. A logic low, or zero-volt condition, on the $\overline{\text{SHUTDOWN}}$ pin is required to turn off the output stage. During shutdown, the output of the temperature sensors becomes high impedance where the potential of the output pin is then determined by external circuitry. If the shutdown feature is not used, it is recommended that the $\overline{\text{SHUTDOWN}}$ pin be connected to $+V_S$ (Pin 8 on the SOIC_N; Pin 2 on the SOT-23).

The shutdown response time of these temperature sensors is shown in Figure 14, Figure 15, and Figure 16.

MOUNTING CONSIDERATIONS

If the TMP35/TMP36/TMP37 temperature sensors are thermally attached and protected, they can be used in any temperature measurement application where the maximum temperature range of the medium is between −40°C and +125°C. Properly cemented or glued to the surface of the medium, these sensors are within 0.01°C of the surface temperature. Caution should be exercised, especially with T-3 packages, because the leads and any wiring to the device can act as heat pipes, introducing errors if the surrounding air-surface interface is not isothermal. Avoiding this condition is easily achieved by dabbing the leads of the temper-ature sensor and the hookup wires with a bead of thermally conductive epoxy. This ensures that the TMP35/TMP36/TMP37 die temperature is not affected by the surrounding air temperature. Because plastic IC packaging technology is used, excessive mechanical stress should be avoided when fastening the device with a clamp or a screw-on heat tab. Thermally conductive epoxy or glue, which must be electrically nonconductive, is recommended under typical mounting conditions.

These temperature sensors, as well as any associated circuitry, should be kept insulated and dry to avoid leakage and corrosion. In wet or corrosive environments, any electrically isolated metal or ceramic well can be used to shield the temperature sensors. Condensation at very cold temperatures can cause errors and should be avoided by sealing the device, using electrically non-conductive epoxy paints or dip or any one of the many printed circuit board coatings and varnishes.

THERMAL ENVIRONMENT EFFECTS

The thermal environment in which the TMP35/TMP36/TMP37 sensors are used determines two important characteristics: self-heating effects and thermal response time. Figure 23 illustrates a thermal model of the TMP35/TMP36/TMP37 temperature sensors, which is useful in under-standing these characteristics.

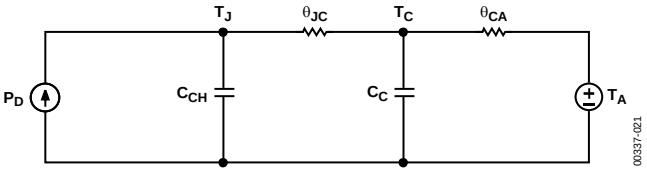

Figure 23. Thermal Circuit Model

In the T-3 package, the thermal resistance junction-to-case, θ_{JC}, is 120°C/W. The thermal resistance case-to-ambient, C_A, is the difference between θ_{JA} and θ_{JC}, and is determined by the char-acteristics of the thermal connection. The power dissipation of the temperature sensor, P_D, is the product of the total voltage across the device and its total supply current, including any current delivered to the load. The rise in die temperature above the ambient temperature of the medium is given by

$$T_J = P_D \times (\theta_{JC} + \theta_{CA}) + T_A$$

Thus, the die temperature rise of a TMP35 SOT-23 package mounted into a socket in still air at 25°C and driven from a 5 V supply is less than 0.04°C.

The transient response of the TMP35/TMP36/TMP37 sensors to a step change in the temperature is determined by the thermal resistances and the thermal capacities of the die, C_{CH}, and the case, C_C. The thermal capacity of C_C varies with the measurement medium because it includes anything in direct contact with the package. In all practical cases, the thermal capacity of C_C is the limiting factor in the thermal response time of the sensor and can be represented by a single-pole RC time constant response. Figure 17 and Figure 19 show the thermal response time of the TMP35/TMP36/TMP37 sensors under various conditions. The thermal time constant of a temperature sensor is defined as the time required for the sensor to reach 63.2% of the final value for a step change in the temperature. For example, the thermal time constant of a TMP35 SOIC package sensor mounted onto a 0.5" × 0.3" PCB is less than 50 sec in air, whereas in a stirred oil bath, the time constant is less than 3 sec.

BASIC TEMPERATURE SENSOR CONNECTIONS

Figure 24 illustrates the basic circuit configuration for the TMP35/TMP36/TMP37 temperature sensors. The table in Figure 24 shows the pin assignments of the temperature sensors for the three package types. For the SOT-23, Pin 3 is labeled NC, as are Pin 2, Pin 3, Pin 6, and Pin 7 on the SOIC_N package. It is recommended that no electrical connections be made to these pins. If the shutdown feature is not needed on the SOT-23 or on the SOIC_N package, the $\overline{\text{SHUTDOWN}}$ pin should be connected to $+V_S$.

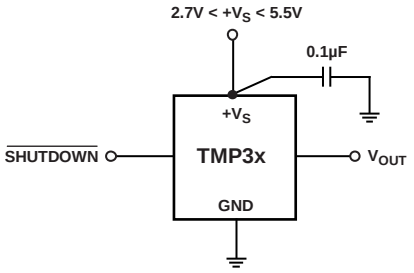

PIN ASSIGNMENTS

PACKAGE	$+V_S$	GND	V_{OUT}	$\overline{\text{SHUTDOWN}}$
SOIC_N	8	4	1	5
SOT-23	2	5	1	4
TO-92	1	3	2	NA

00337-022

Figure 24. Basic Temperature Sensor Circuit Configuration

Note the 0.1 µF bypass capacitor on the input. This capacitor should be a ceramic type, have very short leads (surface-mount is preferable), and be located as close as possible in physical proximity to the temperature sensor supply pin. Because these temperature sensors operate on very little supply current and may be exposed to very hostile electrical environments, it is important to minimize the effects of radio frequency interference (RFI) on these devices. The effect of RFI on these temperature sensors specifically and on analog ICs in general is manifested as abnormal dc shifts in the output voltage due to the rectification of the high frequency ambient noise by the IC. When the devices are operated in the presence of high frequency radiated or conducted noise, a large value tantalum capacitor (±2.2 µF) placed across the 0.1 µF ceramic capacitor may offer additional noise immunity.

FAHRENHEIT THERMOMETERS

Although the TMP35/TMP36/TMP37 temperature sensors are centigrade temperature sensors, a few components can be used to convert the output voltage and transfer characteristics to directly read Fahrenheit temperatures. Figure 25 shows an example of a simple Fahrenheit thermometer using either the TMP35 or the TMP37. Using the TMP35, this circuit can be used to sense temperatures from 41°F to 257°F with an output transfer characteristic of 1 mV/°F; using the TMP37, this circuit can be used to sense temperatures from 41°F to 212°F with an output transfer characteristic of 2 mV/°F. This particular approach does not lend itself to the TMP36 because of its inherent 0.5 V output offset. The circuit is constructed with an AD589, a 1.23 V voltage reference, and four resistors whose values for each sensor are shown in the table in Figure 25. The scaling of the output resistance levels ensures minimum output loading on the temp-erature sensors. A generalized expression for the transfer equation of the circuit is given by

$$V_{OUT} = \left(\frac{R1}{R1+R2}\right)(TMP35) + \left(\frac{R3}{R3+R4}\right)(AD589)$$

where:

TMP35 is the output voltage of the TMP35 or the TMP37 at the measurement temperature, T_M.

AD589 is the output voltage of the reference, that is, 1.23 V.

The output voltage of this circuit is not referenced to the circuit's common ground. If this output voltage were applied directly to the input of an ADC, the ADC common ground should be adjusted accordingly.

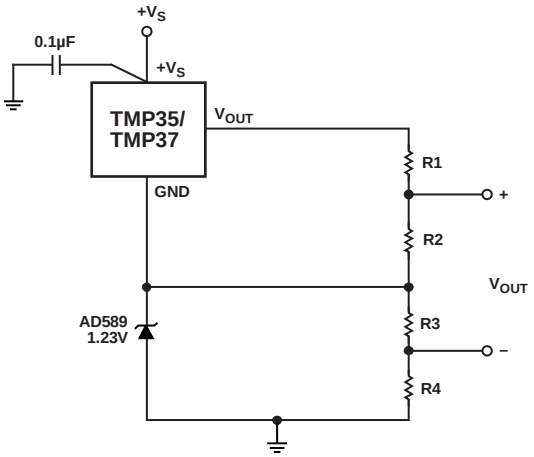

SENSOR	TCV_{OUT}	R1 (kΩ)	R2 (kΩ)	R3 (kΩ)	R4 (kΩ)
TMP35	1mV/°F	45.3	10	10	374
TMP37	2mV/°F	45.3	10	10	182

00337-023

Figure 25. TMP35/TMP37 Fahrenheit Thermometers

The same circuit principles can be applied to the TMP36, but because of the inherent offset of the TMP36, the circuit uses only two resistors, as shown in Figure 26. In this circuit, the output voltage transfer characteristic is 1 mV/°F but is referenced to the common ground of the circuit; however, there is a 58 mV (58°F) offset in the output voltage. For example, the output voltage of the circuit reads 18 mV if the TMP36 is placed in a −40°F ambient environment and 315 mV at +257°F.

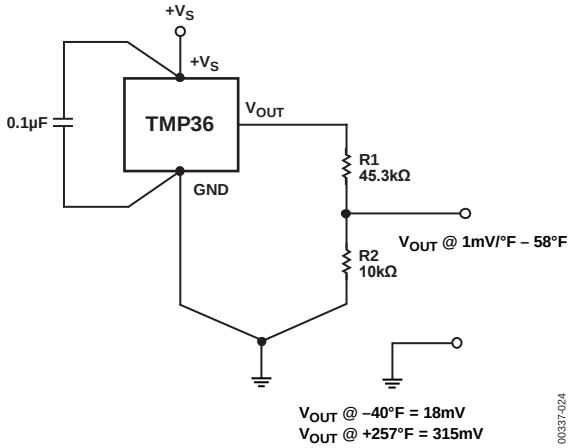

Figure 26. TMP36 Fahrenheit Thermometer Version 1

At the expense of additional circuitry, the offset produced by the circuit in Figure 26 can be avoided by using the circuit in Figure 27. In this circuit, the output of the TMP36 is conditioned by a single-supply, micropower op amp, the OP193. Although the entire circuit operates from a single 3 V supply, the output voltage of the circuit reads the temperature directly, with a transfer characteristic of 1 mV/°F, without offset. This is accomplished through an ADM660, which is a supply voltage inverter. The 3 V supply is inverted and applied to the V− terminal of the OP193. Thus, for a temperature range between −40°F and +257°F, the output of the circuit reads −40 mV to +257 mV. A general expression for the transfer equation of the circuit is given by

$$V_{OUT} = \left(\frac{R6}{R5 + R6}\right)\left(1 + \frac{R4}{R3}\right)(TMP36) - \left(\frac{R4}{R3}\right)\left(\frac{V_S}{2}\right)$$

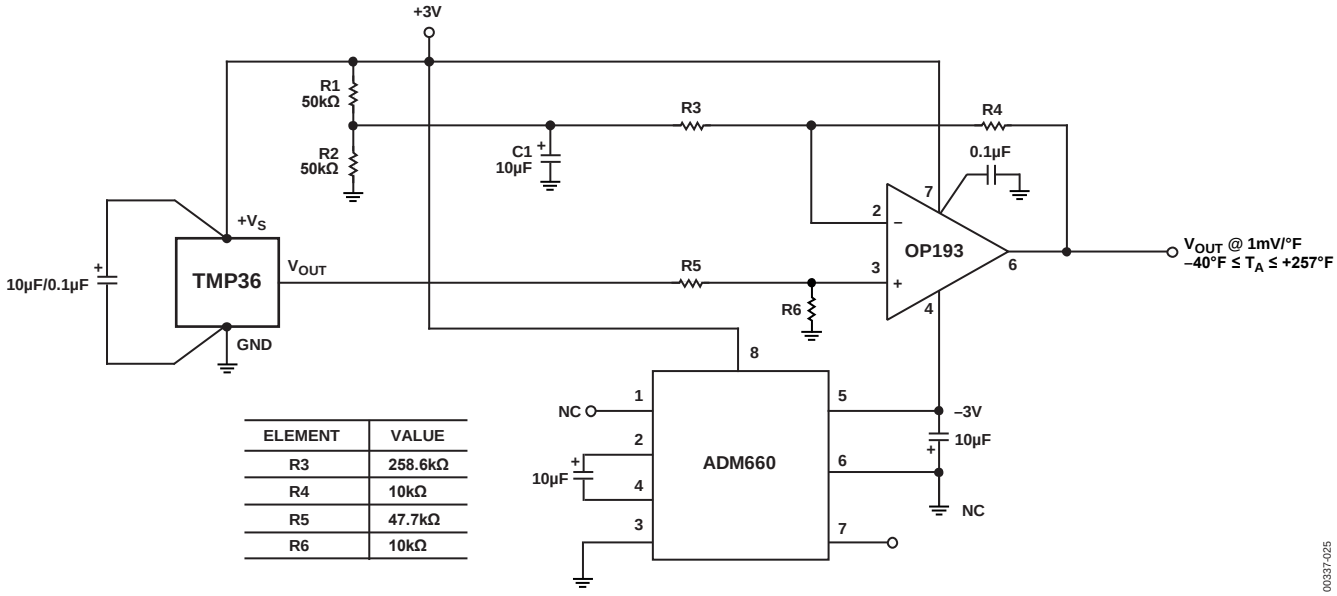

ELEMENT	VALUE
R3	258.6kΩ
R4	10kΩ
R5	47.7kΩ
R6	10kΩ

Figure 27. TMP36 Fahrenheit Thermometer Version 2

AVERAGE AND DIFFERENTIAL TEMPERATURE MEASUREMENT

In many commercial and industrial environments, temperature sensors often measure the average temperature in a building, or the difference in temperature between two locations on a factory floor or in an industrial process. The circuits in Figure 28 and Figure 29 demonstrate an inexpensive approach to average and differential temperature measurement.

In Figure 28, an OP193 sums the outputs of three temperature sensors to produce an output voltage scaled by 10 mV/°C that represents the average temperature at three locations. The circuit can be extended to include as many temperature sensors as required as long as the transfer equation of the circuit is maintained. In this application, it is recommended that one temperature sensor type be used throughout the circuit; otherwise, the output voltage of the circuit cannot produce an accurate reading of the various ambient conditions.

The circuit in Figure 29 illustrates how a pair of TMP35/TMP36/TMP37 sensors used with an OP193 configured as a difference amplifier can read the difference in temperature between two locations. In these applications, it is always possible that one temperature sensor is reading a temperature below that of the other sensor. To accommodate this condition, the output of the OP193 is offset to a voltage at one-half the supply via R5 and R6. Thus, the output voltage of the circuit is measured relative to this point, as shown in Figure 29. Using the TMP36, the output voltage of the circuit is scaled by 10 mV/°C. To minimize the error in the difference between the two measured temperatures, a common, readily available thin-film resistor network is used for R1 to R4.

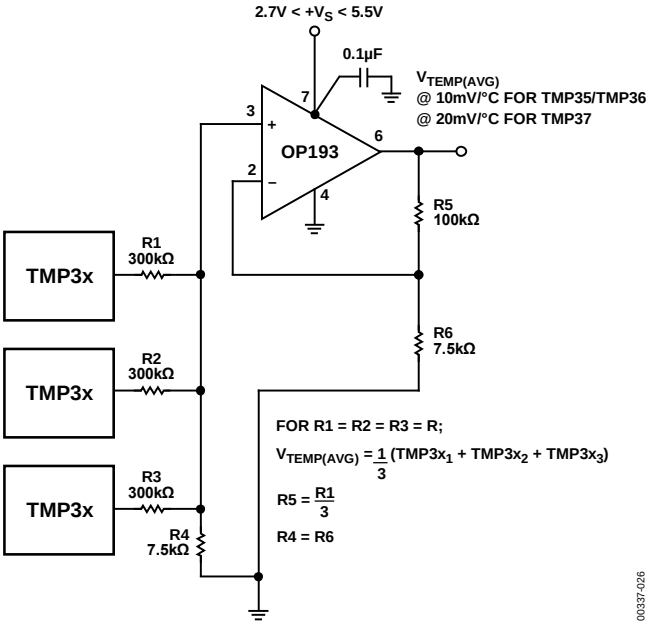

Figure 28. Configuring Multiple Sensors for Average Temperature Measurements

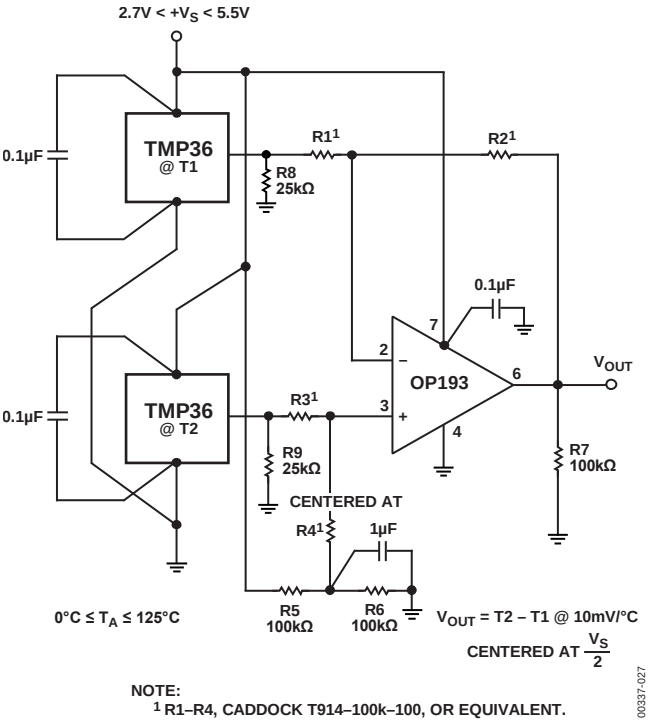

Figure 29. Configuring Multiple Sensors for Differential Temperature Measurements

MICROPROCESSOR INTERRUPT GENERATOR

These inexpensive temperature sensors can be used with a voltage reference and an analog comparator to configure an interrupt generator for microprocessor applications. With the popularity of fast microprocessors, the need to indicate a microprocessor overtemperature condition has grown tremendously. The circuit in Figure 30 demonstrates one way to generate an interrupt using a TMP35, a CMP402 analog comparator, and a REF191, a 2 V precision voltage reference.

The circuit is designed to produce a logic high interrupt signal if the microprocessor temperature exceeds 80°C. This 80°C trip point was arbitrarily chosen (final value set by the microprocessor thermal reference design) and is set using an R3 to R4 voltage divider of the REF191 output voltage. Because the output of the TMP35 is scaled by 10 mV/°C, the voltage at the inverting terminal of the CMP402 is set to 0.8 V.

Because temperature is a slowly moving quantity, the possibility for comparator chatter exists. To avoid this condition, hysteresis is used around the comparator. In this application, a hysteresis of 5°C about the trip point was arbitrarily chosen; the ultimate value for hysteresis should be determined by the end application. The output logic voltage swing of the comparator with R1 and R2 determines the amount of comparator hysteresis. Using a 3.3 V supply, the output logic voltage swing of the CMP402 is 2.6 V; therefore, for a hysteresis of 5°C (50 mV at 10 mV/°C), R1 is set to 20 kΩ, and R2 is set to 1 MΩ. An expression for the hysteresis of this circuit is given by

$$V_{HYS} = \left(\frac{R1}{R2}\right)\left(V_{LOGIC\ SWING,\ CMP402}\right)$$

Because this circuit is probably used in close proximity to high speed digital circuits, R1 is split into equal values and a 1000 pF capacitor is used to form a low-pass filter on the output of the TMP35. Furthermore, to prevent high frequency noise from contaminating the comparator trip point, a 0.1 µF capacitor is used across R4.

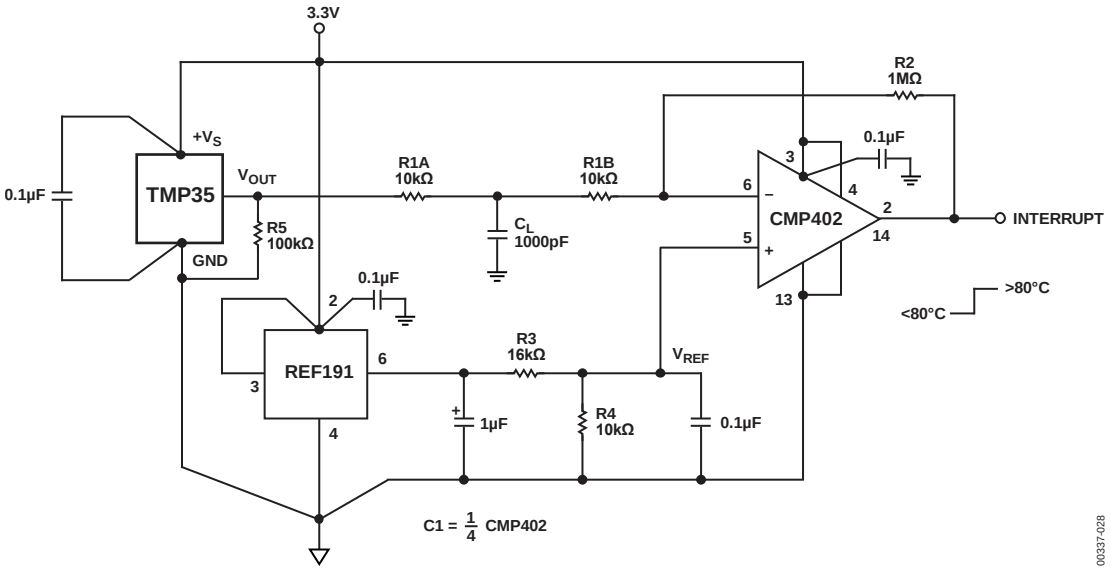

Figure 30. Microprocessor Overtemperature Interrupt Generator

THERMOCOUPLE SIGNAL CONDITIONING WITH COLD-JUNCTION COMPENSATION

The circuit in Figure 31 conditions the output of a Type K thermocouple, while providing cold-junction compensation for temperatures between 0°C and 250°C. The circuit operates from a single 3.3 V to 5.5 V supply and is designed to produce an output voltage transfer characteristic of 10 mV/°C.

A Type K thermocouple exhibits a Seebeck coefficient of approximately 41 µV/°C; therefore, at the cold junction, the TMP35, with a temperature coefficient of 10 mV/°C, is used with R1 and R2 to introduce an opposing cold-junction temperature coefficient of −41 µV/°C. This prevents the isothermal, cold-junction connection between the PCB tracks of the circuit and the wires of the thermocouple from introducing an error in the measured temperature. This compensation works extremely well for circuit ambient temperatures in the range of 20°C to 50°C. Over a 250°C measurement temperature range, the thermocouple produces an output voltage change of 10.151 mV. Because the required output full-scale voltage of the circuit is 2.5 V, the gain of the circuit is set to 246.3. Choosing R4 equal to 4.99 kΩ sets R5 equal to 1.22 MΩ. Because the closest 1% value for R5 is 1.21 MΩ, a 50 kΩ potentiometer is used with R5 for fine trim of the full-scale output voltage. Although the OP193 is a superior single-supply, micropower operational amplifier, its output stage is not rail-to-rail; therefore, the 0°C output voltage level is 0.1 V. If this circuit is digitized by a single-supply ADC, the ADC common should be adjusted to 0.1 V accordingly.

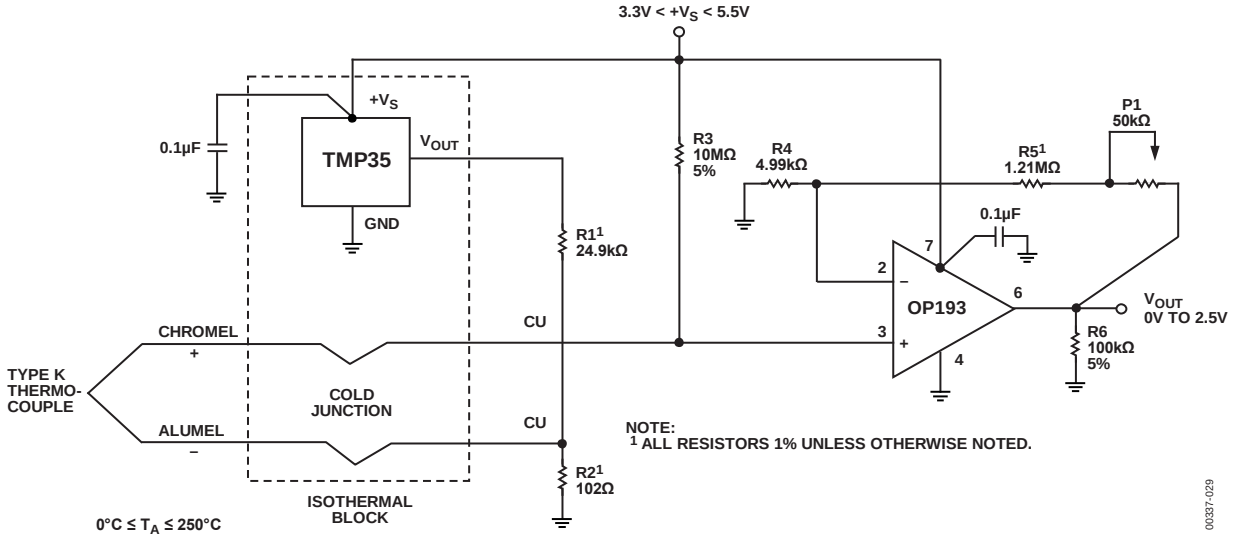

Figure 31. Single-Supply, Type K Thermocouple Signal Conditioning Circuit with Cold-Junction Compensation

USING TMP35/TMP36/TMP37 SENSORS IN REMOTE LOCATIONS

In many industrial environments, sensors are required to operate in the presence of high ambient noise. These noise sources take many forms, for example, SCR transients, relays, radio transmitters, arc welders, and ac motors. They can also be used at considerable distances from the signal conditioning circuitry. These high noise environments are typically in the form of electric fields, so the voltage output of the temperature sensor can be susceptible to contamination from these noise sources.

Figure 32 illustrates a way to convert the output voltage of a TMP35/TMP36/TMP37 sensor into a current to be transmitted down a long twisted pair shielded cable to a ground referenced receiver. The temperature sensors are not capable of high output current operation; thus, a standard PNP transistor is used to boost the output current drive of the circuit. As shown in the table in Figure 32, the values of R2 and R3 were chosen to produce an arbitrary full-scale output current of 2 mA. Lower values for the full-scale current are not recommended. The minimum-scale output current produced by the circuit could be contaminated by ambient magnetic fields operating in the near vicinity of the circuit/cable pair. Because the circuit uses an external transistor, the minimum recommended operating voltage for this circuit is 5 V. To minimize the effects of EMI (or RFI), both the circuit and the temperature sensor supply pins are bypassed with good quality ceramic capacitors.

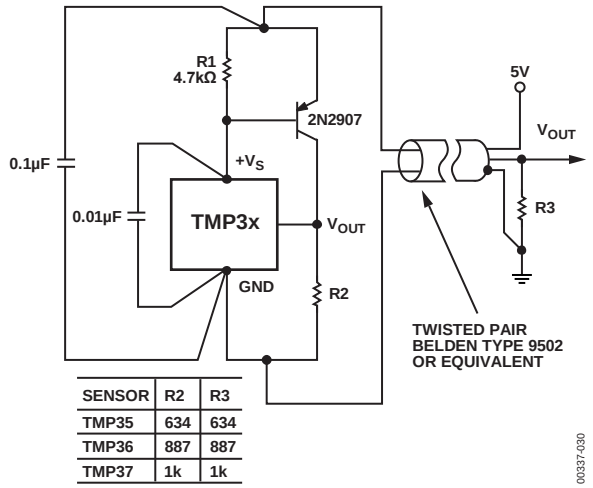

SENSOR	R2	R3
TMP35	634	634
TMP36	887	887
TMP37	1k	1k

Figure 32. Remote, 2-Wire Boosted Output Current Temperature Sensor

TEMPERATURE TO 4–20 mA LOOP TRANSMITTER

In many process control applications, 2-wire transmitters are used to convey analog signals through noisy ambient environments. These current transmitters use a zero-scale signal current of 4 mA, which can be used to power the signal conditioning circuitry of the transmitter. The full-scale output signal in these transmitters is 20 mA.

Figure 33 illustrates a circuit that transmits temperature information in this fashion. Using a TMP35/TMP36/TMP37 as the temperature sensor, the output current is linearly proportional to the temperature of the medium. The entire circuit operates from the 3 V output of the REF193. The REF193 requires no external trimming because of its tight initial output voltage tolerance and the low supply current of the TMP35/TMP36/TMP37, the OP193, and the REF193. The entire circuit consumes less than 3 mA from a total budget of 4 mA. The OP193 regulates the output current to satisfy the current summation at the noninverting node of the OP193. A generalized expression for the KCL equation at Pin 3 of the OP193 is given by

$$I_{OUT} = \left(\frac{1}{R7}\right) \times \left(\frac{TMP3x \times R3}{R1} + \frac{V_{REF} \times R3}{R2}\right)$$

For each temperature sensor, Table 5 provides the values for the components P1, P2, and R1 to R4.

Table 5. Circuit Element Values for Loop Transmitter

Sensor	R1	P1	R2	P2	R3	R4
TMP35	97.6 kΩ	5 kΩ	1.58 MΩ	100 kΩ	140 kΩ	56.2 kΩ
TMP36	97.6 kΩ	5 kΩ	931 kΩ	50 kΩ	97.6 kΩ	47 kΩ
TMP37	97.6 kΩ	5 kΩ	10.5 kΩ	500 Ω	84.5 kΩ	8.45 kΩ

The 4 mA offset trim is provided by P2, and P1 provides the full-scale gain trim of the circuit at 20 mA. These two trims do not interact because the noninverting input of the OP193 is held at a virtual ground. The zero-scale and full-scale output currents of the circuit are adjusted according to the operating temperature range of each temperature sensor. The Schottky diode, D1, is required in this circuit to prevent loop supply power-on transients from pulling the noninverting input of the OP193 more than 300 mV below its inverting input. Without this diode, such transients can cause phase reversal of the operational amplifier and possible latch-up of the transmitter. The loop supply voltage compliance of the circuit is limited by the maximum applied input voltage to the REF193; it is from 9 V to 18 V.

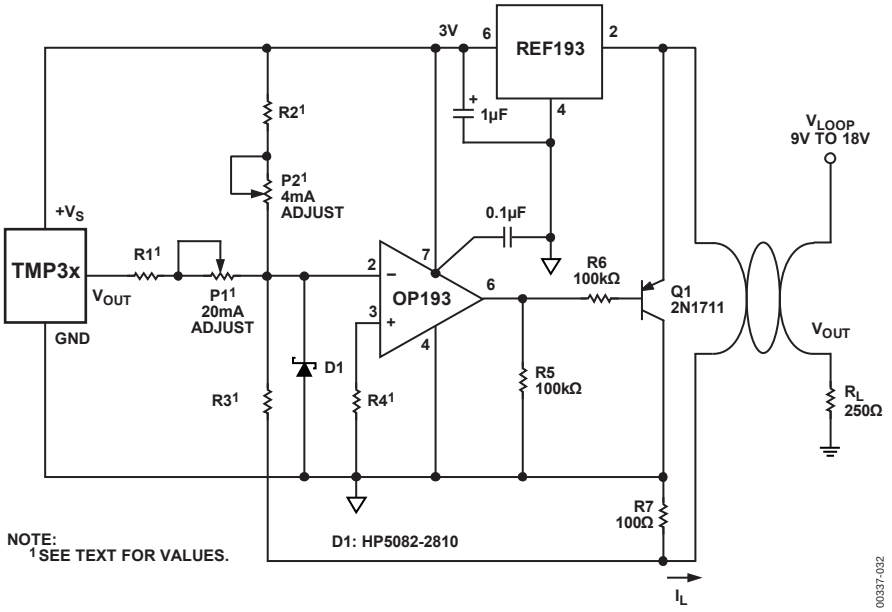

Figure 33. Temperature to 4–20 mA Loop Transmitter

TEMPERATURE-TO-FREQUENCY CONVERTER

Another common method of transmitting analog information from a remote location is to convert a voltage to an equivalent value in the frequency domain. This is readily done with any of the low cost, monolithic voltage-to-frequency converters (VFCs) available. These VFCs feature a robust, open-collector output transistor for easy interfacing to digital circuitry. The digital signal produced by the VFC is less susceptible to contamination from external noise sources and line voltage drops because the only important information is the frequency of the digital signal. When the conversions between temperature and frequency are done accurately, the temperature data from the sensors can be reliably transmitted.

The circuit in Figure 34 illustrates a method by which the outputs of these temperature sensors can be converted to a frequency using the AD654. The output signal of the AD654 is a square wave that is proportional to the dc input voltage across Pin 4 and Pin 3. The transfer equation of the circuit is given by

$$f_{OUT} = \left(\frac{V_{TPM} - V_{OFFSET}}{10 \times (R_T \times C_T)} \right)$$

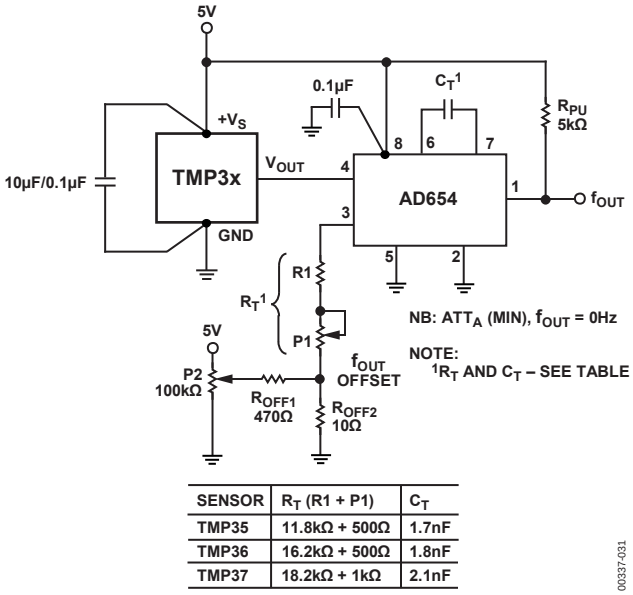

SENSOR	R_T (R1 + P1)	C_T
TMP35	11.8kΩ + 500Ω	1.7nF
TMP36	16.2kΩ + 500Ω	1.8nF
TMP37	18.2kΩ + 1kΩ	2.1nF

Figure 34. Temperature-to-Frequency Converter

An offset trim network (f_{OUT} OFFSET) is included with this circuit to set f_{OUT} to 0 Hz when the minimum output voltage of the temperature sensor is reached. Potentiometer P1 is required to calibrate the absolute accuracy of the AD654. The table in Figure 34 illustrates the circuit element values for each of the three sensors. The nominal offset voltage required for 0 Hz output from the TMP35 is 50 mV; for the TMP36 and TMP37, the offset voltage required is 100 mV. For the circuit values shown, the output frequency transfer characteristic of the circuit was set at 50 Hz/°C in all cases. At the receiving end, a frequency-to-voltage converter (FVC) can be used to convert the frequency back to a dc voltage for further processing. One such FVC is the AD650.

For complete information about the AD650 and the AD654, consult the individual data sheets for those devices.

DRIVING LONG CABLES OR HEAVY CAPACITIVE LOADS

Although the TMP35/TMP36/TMP37 temperature sensors can drive capacitive loads up to 10,000 pF without oscillation, output voltage transient response times can be improved by using a small resistor in series with the output of the temperature sensor, as shown in Figure 35. As an added benefit, this resistor forms a low-pass filter with the cable capacitance, which helps to reduce bandwidth noise. Because the temperature sensor is likely to be used in environments where the ambient noise level can be very high, this resistor helps to prevent rectification by the devices of the high frequency noise. The combination of this resistor and the supply bypass capacitor offers the best protection.

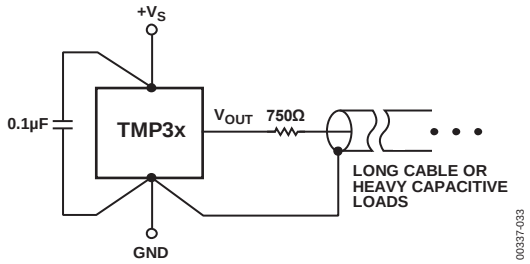

Figure 35. Driving Long Cables or Heavy Capacitive Loads

COMMENTARY ON LONG-TERM STABILITY

The concept of long-term stability has been used for many years to describe the amount of parameter shift that occurs during the lifetime of an IC. This is a concept that has been typically applied to both voltage references and monolithic temperature sensors. Unfortunately, integrated circuits cannot be evaluated at room temperature (25°C) for 10 years or more to determine this shift. As a result, manufacturers very typically perform accelerated lifetime testing of integrated circuits by operating ICs at elevated temperatures (between 125°C and 150°C) over a shorter period of time (typically, between 500 and 1000 hours).

As a result of this operation, the lifetime of an integrated circuit is significantly accelerated due to the increase in rates of reaction within the semiconductor material.

OUTLINE DIMENSIONS

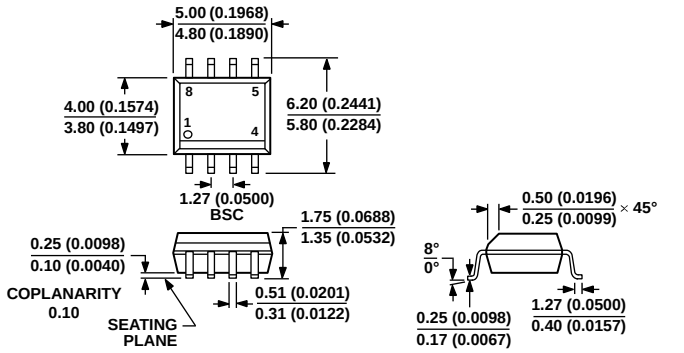

COMPLIANT TO JEDEC STANDARDS MS-012-AA

CONTROLLING DIMENSIONS ARE IN MILLIMETERS; INCH DIMENSIONS (IN PARENTHESES) ARE ROUNDED-OFF MILLIMETER EQUIVALENTS FOR REFERENCE ONLY AND ARE NOT APPROPRIATE FOR USE IN DESIGN.

012407-A

Figure 36. 8-Lead Standard Small Outline Package [SOIC_N]
Narrow Body
(R-8)
Dimensions shown in millimeters and (inches)

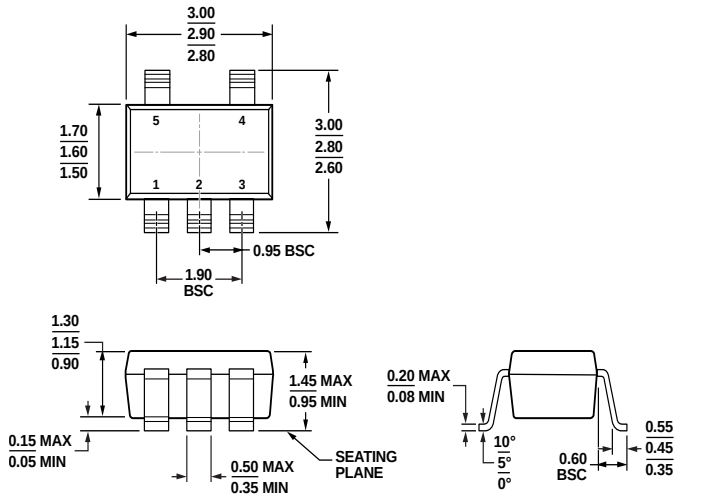

COMPLIANT TO JEDEC STANDARDS MO-178-AA

11-01-2010-A

Figure 37. 5-Lead Small Outline Transistor Package [SOT-23]
(RJ-5)
Dimensions shown in millimeters

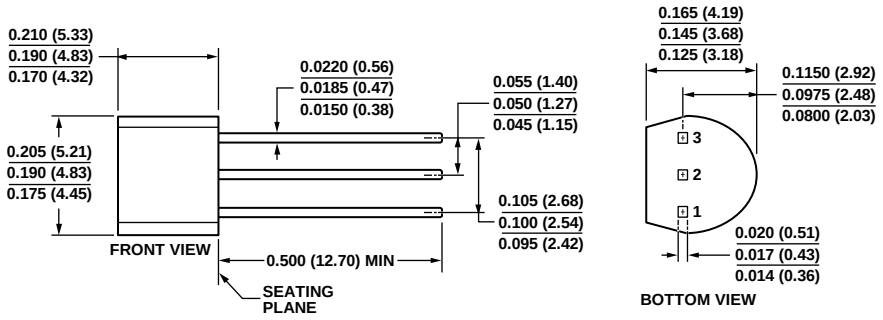

COMPLIANT TO JEDEC STANDARDS TO-226-AA
CONTROLLING DIMENSIONS ARE IN INCHES; MILLIMETER DIMENSIONS (IN PARENTHESES) ARE ROUNDED-OFF EQUIVALENTS FOR REFERENCE ONLY AND ARE NOT APPROPRIATE FOR USE IN DESIGN.

042208-A

Figure 38. 3-Pin Plastic Header-Style Package [TO-92] (T-3-1) Dimensions shown in inches and (millimeters)

ORDERING GUIDE

Model[1, 2]	Accuracy at 25°C (°C max)	Linear Operating Temperature Range	Package Description	Package Option	Branding
TMP35FSZ-REEL	±2.0	10°C to 125°C	8-Lead Standard Small Outline Package (SOIC_N)	R-8	
TMP35GRTZ-REEL7	±3.0	10°C to 125°C	5-Lead Small Outline Transistor Package (SOT-23)	RJ-5	#T11
TMP35GT9Z	±3.0	10°C to 125°C	3-Pin Plastic Header-Style Package (TO-92)	T-3-1	
ADW75001Z-0REEL7	±3.0	−40°C to +125°C	5-Lead Small Outline Transistor Package (SOT-23)	RJ-5	#T6G
TMP36FS	±2.0	−40°C to +125°C	8-Lead Standard Small Outline Package (SOIC_N)	R-8	
TMP36FS-REEL	±2.0	−40°C to +125°C	8-Lead Standard Small Outline Package (SOIC_N)	R-8	
TMP36FSZ	±2.0	−40°C to +125°C	8-Lead Standard Small Outline Package (SOIC_N)	R-8	
TMP36FSZ-REEL	±2.0	−40°C to +125°C	8-Lead Standard Small Outline Package (SOIC_N)	R-8	
TMP36GRT-REEL7	±3.0	−40°C to +125°C	5-Lead Small Outline Transistor Package (SOT-23)	RJ-5	T6G
TMP36GRTZ-REEL7	±3.0	−40°C to +125°C	5-Lead Small Outline Transistor Package (SOT-23)	RJ-5	#T6G
TMP36GSZ	±3.0	−40°C to +125°C	8-Lead Standard Small Outline Package (SOIC_N)	R-8	
TMP36GSZ-REEL	±3.0	−40°C to +125°C	8-Lead Standard Small Outline Package (SOIC_N)	R-8	
TMP36GSZ-REEL7	±3.0	−40°C to +125°C	8-Lead Standard Small Outline Package (SOIC_N)	R-8	
TMP36GT9	±3.0	−40°C to +125°C	3-Pin Plastic Header-Style Package (TO-92)	T-3-1	
TMP36GT9Z	±3.0	−40°C to +125°C	3-Pin Plastic Header-Style Package (TO-92)	T-3-1	
TMP36-PT7		−40°C to +125°C	Chips or Die		
TMP37FT9Z	±2.0	5°C to 100°C	3-Pin Plastic Header-Style Package (TO-92)	T-3-1	
TMP37GRTZ-REEL7	±3.0	5°C to 100°C	5-Lead Small Outline Transistor Package (SOT-23)	RJ-5	#T12

[1] Z = RoHS Compliant Part.
[2] W = Qualified for Automotive Applications.

AUTOMOTIVE PRODUCTS

The ADW75001Z-0REEL7 model is available with controlled manufacturing to support the quality and reliability requirements of automotive applications. Note that this automotive model may have specifications that differ from the commercial models; therefore, designers should review the Specifications section of this data sheet carefully. Only automotive grade products shown are available for use in automotive applications. Contact your local Analog Devices account representative for specific product ordering information and to obtain the specific Automotive Reliability reports for these models.

©1996–2015 Analog Devices, Inc. All rights reserved. Trademarks and registered trademarks are the property of their respective owners.
D00337-0-5/15(H)

Mouser Electronics

Authorized Distributor

Click to View Pricing, Inventory, Delivery & Lifecycle Information:

Analog Devices Inc.:
TMP36FSZ TMP35GT9Z TMP36GSZ-REEL TMP36GT9Z TMP37FT9Z TMP36GT9 TMP36GSZ-REEL7 TMP36GRTZ-REEL7 TMP35GRTZ-REEL7 TMP36FS TMP37GRTZ-REEL7 TMP36-PT7 TMP36GSZ TMP36FSZ-REEL TMP36FS-REEL TMP36GRT-REEL7