IR Receiver Modules for Remote Control Systems

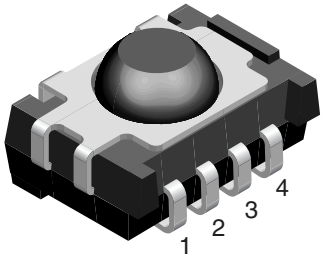

FEATURES

- Low supply current
- Photo detector and preamplifier in one package
- Internal filter for PCM frequency
- Improved shielding against EMI
- Supply voltage: 2.5 V to 5.5 V
- Improved immunity against ambient light
- Insensitive to supply voltage ripple and noise
- Taping available for top view and side view assembly
- Material categorization: For definitions of compliance please see www.vishay.com/doc?99912

Pb-free
e3
RoHS COMPLIANT
HALOGEN FREE
GREEN (5-2008)

MECHANICAL DATA

Pinning

1 = GND, 2 = N.C., 3 = V_S, 4 = OUT

ORDERING CODE

Taping:

TSOP6...TT - top view taped

TSOP6...TR - side view taped

DESCRIPTION

The TSOP61.., TSOP63.. series are miniaturized SMD-IR receivers for infrared remote control systems. A PIN diode and a preamplifier are assembled on a lead frame, the epoxy package acts as an IR filter.

The demodulated output signal can be directly connected to a microprocessor for decoding. The TSOP61.. is a legacy product compatible with all common IR remote control data formats. The TSOP63.. is optimized to better suppress spurious pulses from energy saving fluorescent lamps. The TSOP65.. has an excellent noise suppression. It is immune to dimmed LCD backlighting and any fluorescent lamps. AGC3 and AGC5 may also suppress some data signals in case of continuous transmission. Between these three receiver types, the TSOP63.. is preferred. Customers should initially try the TSOP63.. in their design.

This component has not been qualified according to automotive specifications.

PARTS TABLE

AGC		LEGACY, FOR SHORT BURST REMOTE CONTROLS (AGC1)	NOISY ENVIRONMENTS AND SHORT BURSTS (AGC3)	VERY NOISY ENVIRONMENTS AND SHORT BURSTS (AGC5)
Carrier frequency	30 kHz	TSOP6130	TSOP6330	TSOP6530
	33 kHz	TSOP6133	TSOP6333	TSOP6533
	36 kHz	TSOP6136	TSOP6336 (1)(2)	TSOP6536 (1)(2)
	38 kHz	TSOP6138	TSOP6338 (3)(4)(5)(6)	TSOP6538 (3)(4)(5)
	40 kHz	TSOP6140	TSOP6340	TSOP6540
	56 kHz	TSOP6156	TSOP6356	TSOP6556
Package		Panhead		
Pinning		1 = GND, 2 = N.C., 3 = V_S, 4 = OUT		
Dimensions (mm)		7.5 W x 5.3 H x 4.0 D		
Mounting		SMD		
Application		Remote control		
Best remote control code		(1) MCIR (2) RCMM (3) Mitsubishi (4) RECS-80 Code (5) r-map (6) XMP-1, XMP-2		

THIS DOCUMENT IS SUBJECT TO CHANGE WITHOUT NOTICE. THE PRODUCTS DESCRIBED HEREIN AND THIS DOCUMENT ARE SUBJECT TO SPECIFIC DISCLAIMERS, SET FORTH AT www.vishay.com/doc?91000

BLOCK DIAGRAM

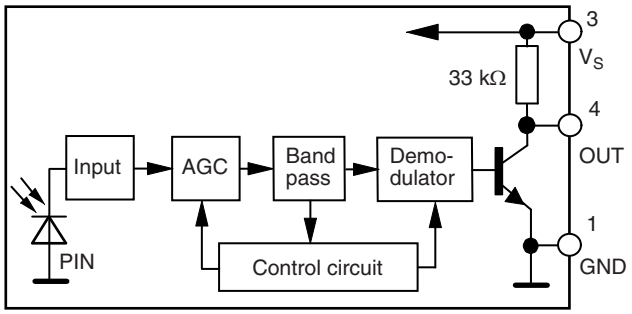

16838-1

APPLICATION CIRCUIT

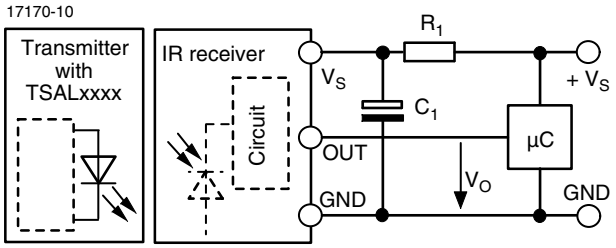

The external components R_1 and C_1 are optional to improve the robustness against electrical overstress (typical values are R_1 = 100 Ω, C_1 = 0.1 µF).

ABSOLUTE MAXIMUM RATINGS				
PARAMETER	**TEST CONDITION**	**SYMBOL**	**VALUE**	**UNIT**
Supply voltage		V_S	-0.3 to +6	V
Supply current		I_S	5	mA
Output voltage		V_O	-0.3 to (V_S + 0.3)	V
Output current		I_O	5	mA
Junction temperature		T_j	100	°C
Storage temperature range		T_{stg}	-25 to +85	°C
Operating temperature range		T_{amb}	-25 to +85	°C
Power consumption	$T_{amb} \leq 85$ °C	P_{tot}	10	mW

Note

- Stresses beyond those listed under “Absolute Maximum Ratings” may cause permanent damage to the device. This is a stress rating only and functional operation of the device at these or any other conditions beyond those indicated in the operational sections of this specification is not implied. Exposure to absolute maximum rating conditions for extended periods may affect the device reliability.

ELECTRICAL AND OPTICAL CHARACTERISTICS (T_{amb} = 25 °C, unless otherwise specified)						
PARAMETER	**TEST CONDITION**	**SYMBOL**	**MIN.**	**TYP.**	**MAX.**	**UNIT**
Supply voltage		V_S	2.5		5.5	V
Supply current	V_S = 5 V, E_v = 0	I_{SD}	0.55	0.7	0.9	mA
	E_v = 40 klx, sunlight	I_{SH}		0.8		mA
Transmission distance	E_v = 0, IR diode TSAL6200, I_F = 250 mA, test signal see fig. 1	d		40		m
Output voltage low	I_{OSL} = 0.5 mA, E_e = 0.7 mW/m^2, test signal see fig. 1	V_{OSL}			100	mV
Minimum irradiance	Pulse width tolerance: $t_{pi} - 5/f_o < t_{po} < t_{pi} + 6/f_o$, test signal see fig. 1	$E_{e\ min.}$		0.2	0.4	mW/m^2
Maximum irradiance	$t_{pi} - 5/f_o < t_{po} < t_{pi} + 6/f_o$, test signal see fig. 1	$E_{e\ max.}$	50			W/m^2
Directivity	Angle of half transmission distance	$\varphi_{1/2}$		± 50		deg

THIS DOCUMENT IS SUBJECT TO CHANGE WITHOUT NOTICE. THE PRODUCTS DESCRIBED HEREIN AND THIS DOCUMENT ARE SUBJECT TO SPECIFIC DISCLAIMERS, SET FORTH AT www.vishay.com/doc?91000

TYPICAL CHARACTERISTICS (T_{amb} = 25 °C, unless otherwise specified)

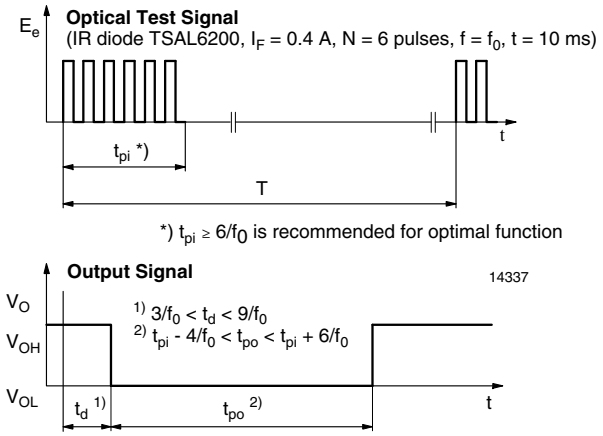

Fig. 1 - Output Active Low

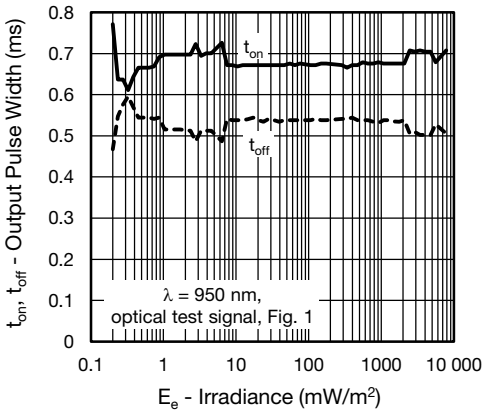

Fig. 4 - Output Pulse Diagram

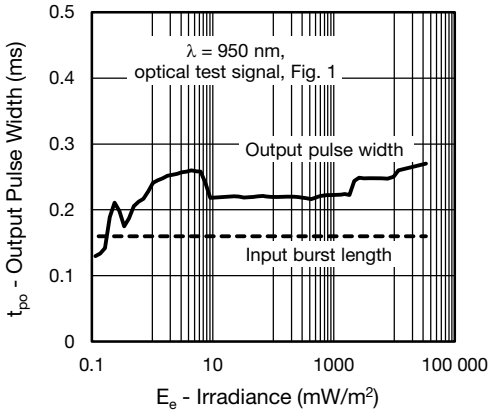

Fig. 2 - Pulse Length and Sensitivity in Dark Ambient

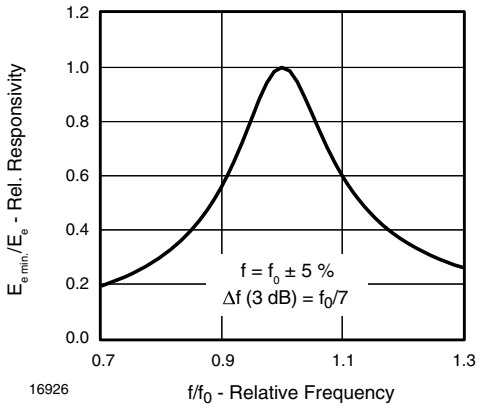

Fig. 5 - Frequency Dependence of Responsivity

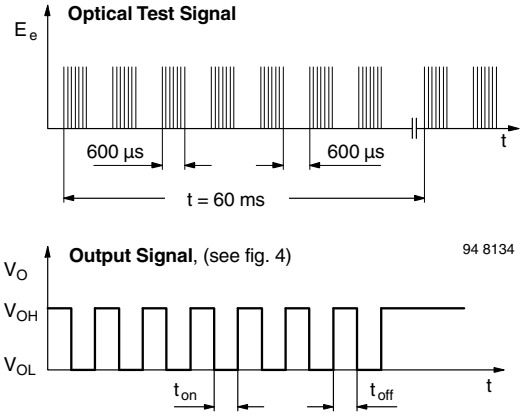

Fig. 3 - Output Function

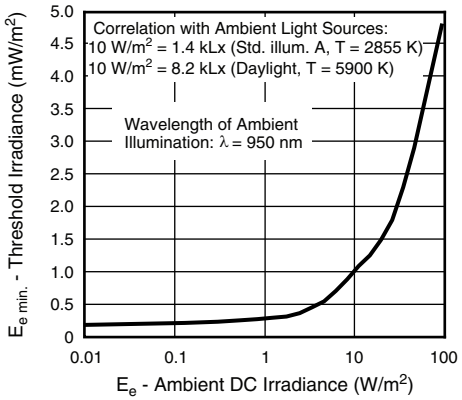

Fig. 6 - Sensitivity in Bright Ambient

THIS DOCUMENT IS SUBJECT TO CHANGE WITHOUT NOTICE. THE PRODUCTS DESCRIBED HEREIN AND THIS DOCUMENT ARE SUBJECT TO SPECIFIC DISCLAIMERS, SET FORTH AT www.vishay.com/doc?91000

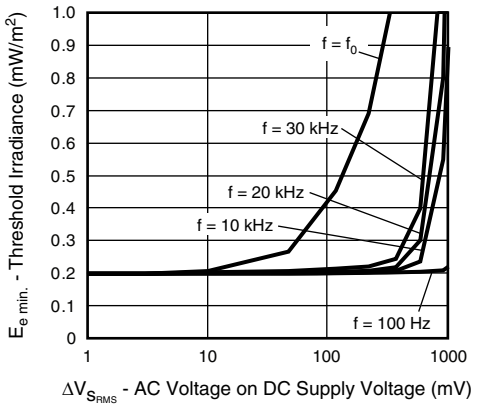

Fig. 7 - Sensitivity vs. Supply Voltage Disturbances

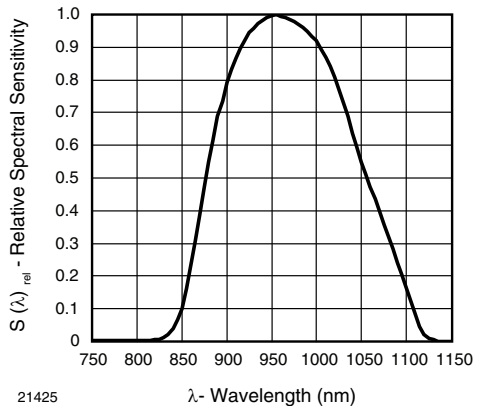

Fig. 10 - Relative Spectral Sensitivity vs. Wavelength

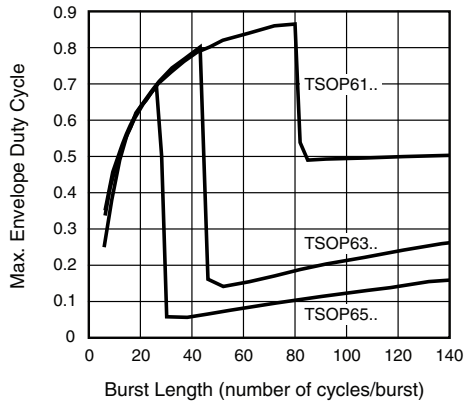

Fig. 8 - Max. Envelope Duty Cycle vs. Burst Length

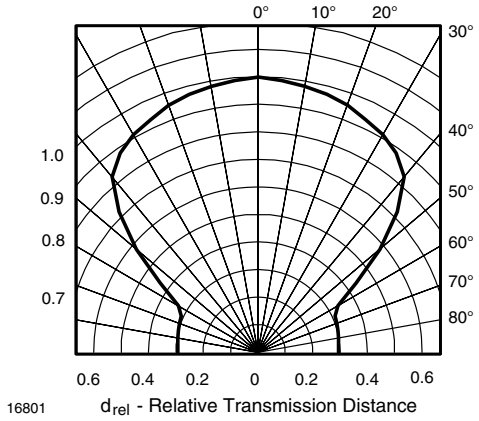

Fig. 11 - Horizontal Directivity

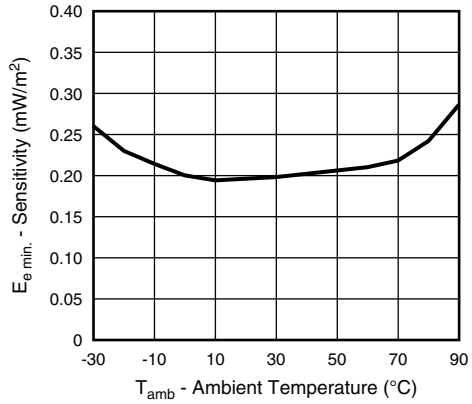

Fig. 9 - Sensitivity vs. Ambient Temperature

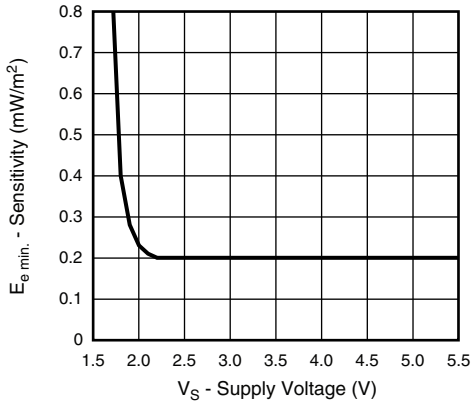

Fig. 12 - Sensitivity vs. Supply Voltage

THIS DOCUMENT IS SUBJECT TO CHANGE WITHOUT NOTICE. THE PRODUCTS DESCRIBED HEREIN AND THIS DOCUMENT ARE SUBJECT TO SPECIFIC DISCLAIMERS, SET FORTH AT www.vishay.com/doc?91000

SUITABLE DATA FORMAT

This series is designed to suppress spurious output pulses due to noise or disturbance signals. The devices can distinguish data signals from noise due to differences in frequency, burst length, and envelope duty cycle. The data signal should be close to the device's band-pass center frequency (e.g. 38 kHz) and fulfill the conditions in the table below.

When a data signal is applied to the product in the presence of a disturbance, the sensitivity of the receiver is automatically reduced by the AGC to insure that no spurious pulses are present at the receiver's output.

Some examples which are suppressed are:

- DC light (e.g. from tungsten bulbs sunlight)
- Continuous signals at any frequency
- Strongly or weakly modulated patterns from fluorescent lamps with electronic ballasts (see figure 13 or figure 14)

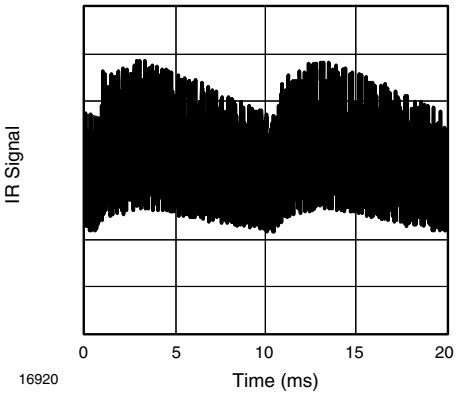

Fig. 13 - IR Disturbance from Fluorescent Lamp with Low Modulation

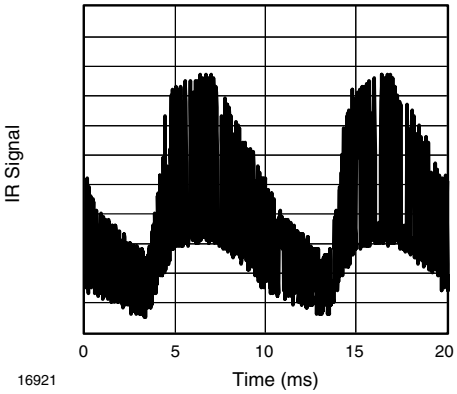

Fig. 14 - IR Disturbance from Fluorescent Lamp with High Modulation

	TSOP61..	TSOP63..	TSOP65..
Minimum burst length	6 cycles/burst	6 cycles/burst	6 cycles/burst
After each burst of length A gap time is required of	6 to 70 cycles ≥ 10 cycles	6 to 35 cycles ≥ 10 cycles	6 to 24 cycles ≥ 10 cycles
For bursts greater than a minimum gap time in the data stream is needed of	70 cycles > 1.2 x burst length	35 cycles > 6 x burst length	24 cycles > 25 ms
Maximum number of continuous short bursts/second	2000	2000	2000
MCIR code	yes	preferred	yes
RCMM code	yes	preferred	yes
XMP-1, XMP-2 code	yes	preferred	yes
Suppression of interference from fluorescent lamps	Common disturbance patterns are supressed (example: signal pattern of fig. 14)	Even critical disturbance patterns are suppressed (examples: signal pattern of fig. 14 and fig. 15)	Even critical disturbance patterns are suppressed (examples: signal pattern of fig. 14 and fig. 15)

Notes

- For data formats with long bursts (more than 10 carrier cycles) please see the datasheet for TSOP62.., TSOP64..
- Best choice of AGC for some popular IR-codes:
  - TSOP6336, TSOP36536: MCIR, RCMM
  - TSOP6538: Mitsubishi, RECS-80 Code
  - TSOP6338: XMP-1, XMP-2, r-map
- For SIRCS 15 and 20 bit, Sony 12 bit IR-codes, please see the datasheet for TSOP4S40, TSOP2S40

THIS DOCUMENT IS SUBJECT TO CHANGE WITHOUT NOTICE. THE PRODUCTS DESCRIBED HEREIN AND THIS DOCUMENT ARE SUBJECT TO SPECIFIC DISCLAIMERS, SET FORTH AT www.vishay.com/doc?91000

PACKAGE DIMENSIONS in millimeters

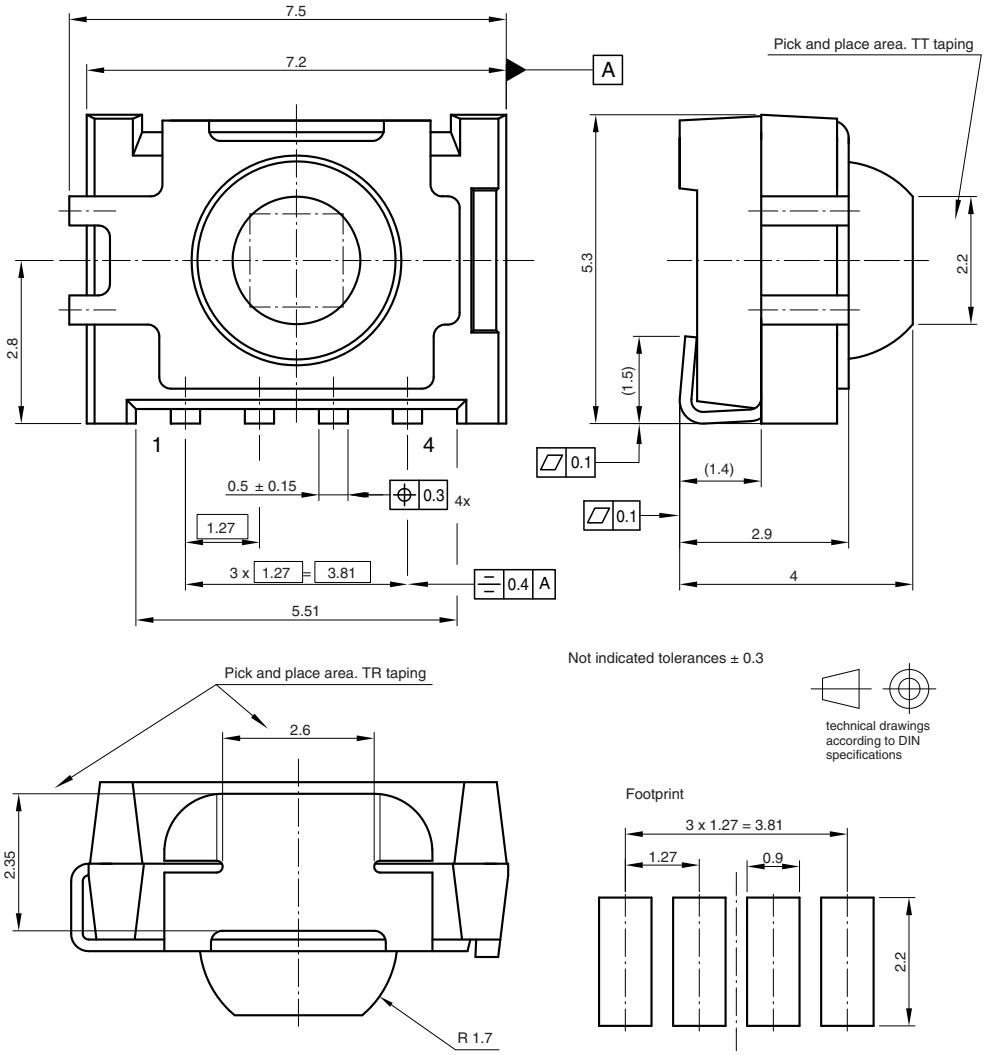

Drawing-No.: 6.544-5341.01-4
Issue: 8; 02.09.09
16776

ASSEMBLY INSTRUCTIONS

Reflow Soldering

- Reflow soldering must be done within 72 h while stored under a max. temperature of 30 °C, 60 % RH after opening the dry pack envelope
- Set the furnace temperatures for pre-heating and heating in accordance with the reflow temperature profile as shown in the diagram. Exercise extreme care to keep the maximum temperature below 260 °C. The temperature shown in the profile means the temperature at the device surface. Since there is a temperature difference between the component and the circuit board, it should be verified that the temperature of the device is accurately being measured
- Handling after reflow should be done only after the work surface has been cooled off

Manual Soldering

- Use a soldering iron of 25 W or less. Adjust the temperature of the soldering iron below 300 °C
- Finish soldering within 3 s
- Handle products only after the temperature has cooled off

THIS DOCUMENT IS SUBJECT TO CHANGE WITHOUT NOTICE. THE PRODUCTS DESCRIBED HEREIN AND THIS DOCUMENT ARE SUBJECT TO SPECIFIC DISCLAIMERS, SET FORTH AT www.vishay.com/doc?91000

VISHAY LEAD (Pb)-FREE REFLOW SOLDER PROFILE

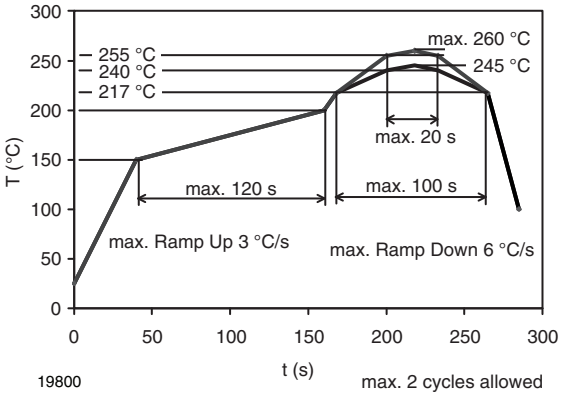

TAPING VERSION TSOP..TT DIMENSIONS in millimeters

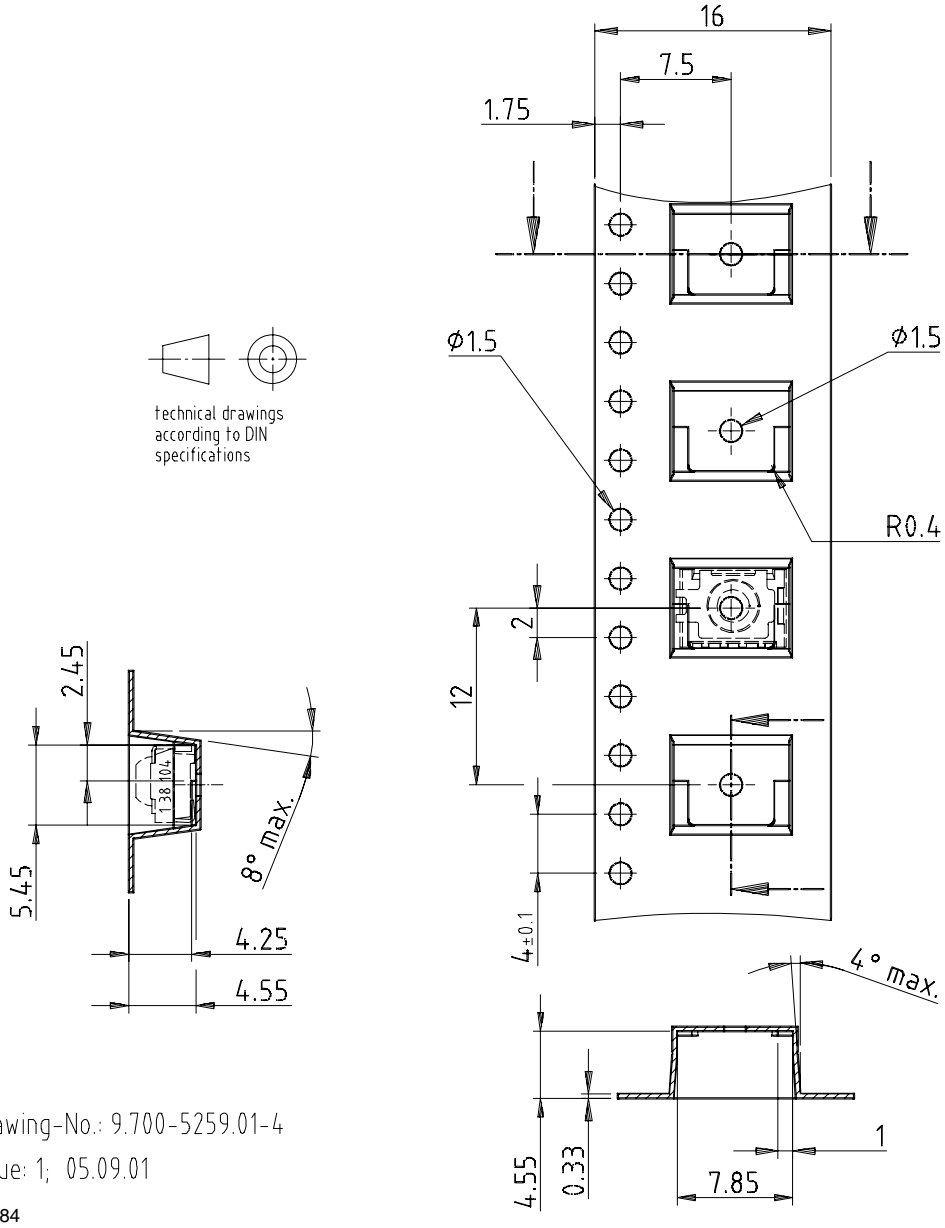

THIS DOCUMENT IS SUBJECT TO CHANGE WITHOUT NOTICE. THE PRODUCTS DESCRIBED HEREIN AND THIS DOCUMENT ARE SUBJECT TO SPECIFIC DISCLAIMERS, SET FORTH AT www.vishay.com/doc?91000

TAPING VERSION TSOP..TR DIMENSIONS in millimeters

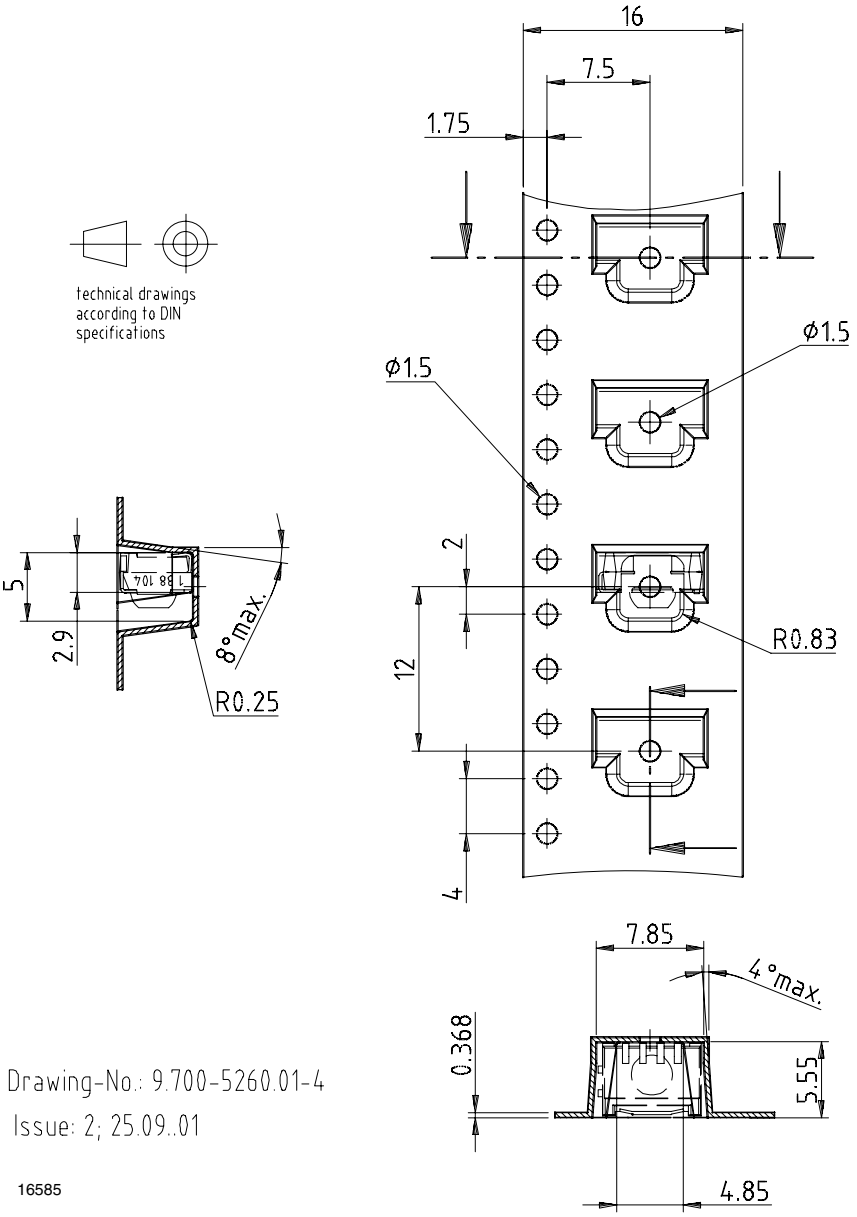

THIS DOCUMENT IS SUBJECT TO CHANGE WITHOUT NOTICE. THE PRODUCTS DESCRIBED HEREIN AND THIS DOCUMENT ARE SUBJECT TO SPECIFIC DISCLAIMERS, SET FORTH AT www.vishay.com/doc?91000

REEL DIMENSIONS in millimeters

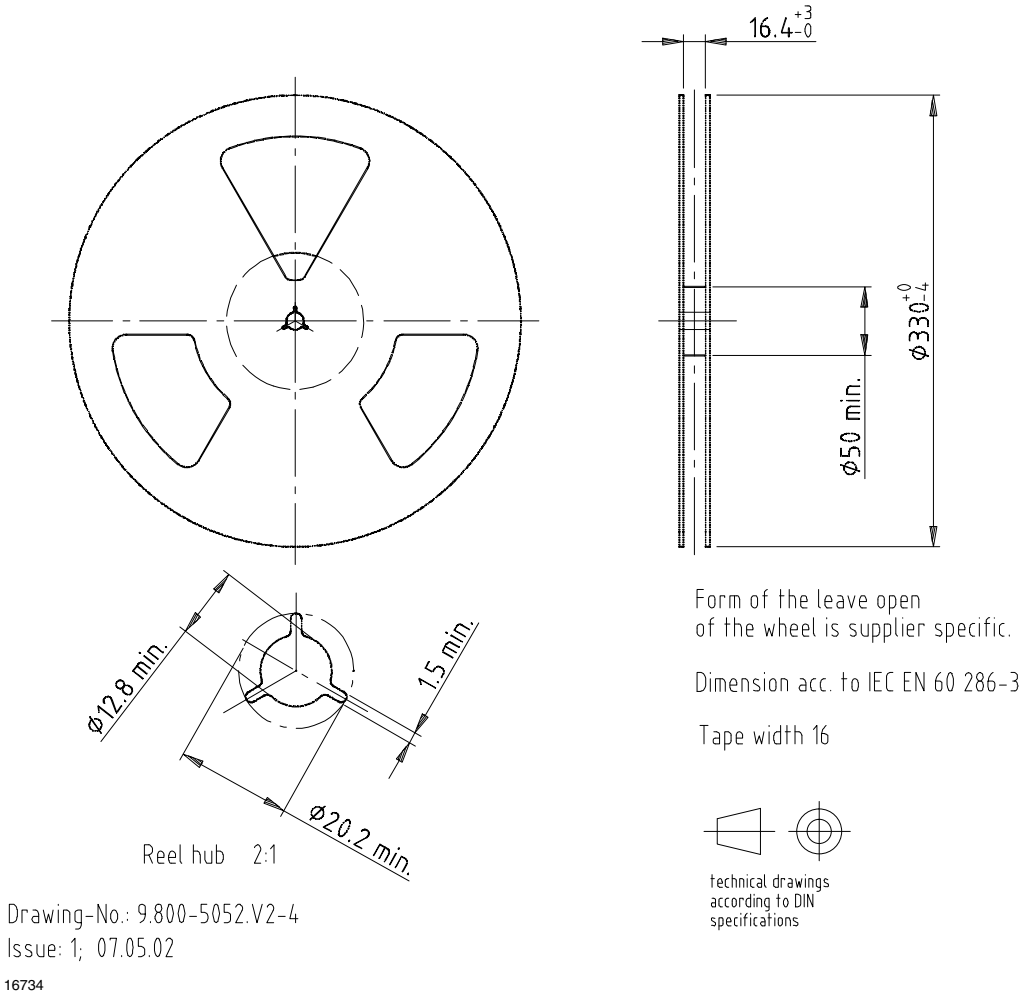

LEADER AND TRAILER DIMENSIONS in millimeters

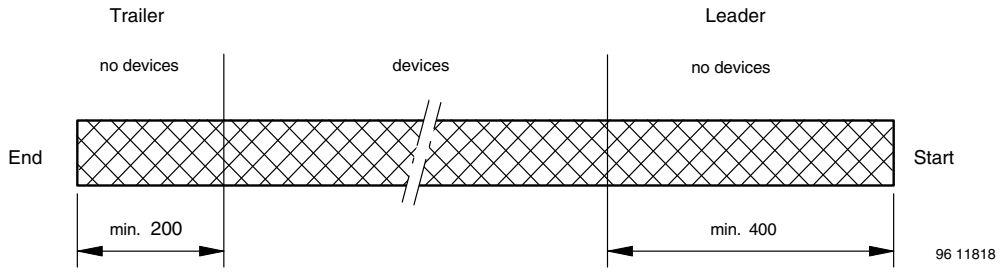

COVER TAPE PEEL STRENGTH

According to DIN EN 60286-3
0.1 N to 1.3 N
300 ± 10 mm/min.
165° to 180° peel angle

LABEL

Standard bar code labels for finished goods

The standard bar code labels are product labels and used for identification of goods. The finished goods are packed in final packing area. The standard packing units are labeled with standard bar code labels before transported as finished goods to warehouses. The labels are on each packing unit and contain Vishay Semiconductor GmbH specific data.

THIS DOCUMENT IS SUBJECT TO CHANGE WITHOUT NOTICE. THE PRODUCTS DESCRIBED HEREIN AND THIS DOCUMENT ARE SUBJECT TO SPECIFIC DISCLAIMERS, SET FORTH AT www.vishay.com/doc?91000

VISHAY SEMICONDUCTOR GmbH STANDARD BAR CODE PRODUCT LABEL (Finished goods)		
PLAIN WRITING	**ABBREVIATION**	**LENGTH**
Item-description	-	18
Item-number	INO	8
Selection-code	SEL	3
LOT-/serial-number	BATCH	10
Data-code	COD	3 (YWW)
Plant-code	PTC	2
Quantity	QTY	8
Accepted by	ACC	-
Packed by	PCK	-
Mixed code indicator	MIXED CODE	-
Origin	xxxxxxx+	Company logo
LONG BAR CODE TOP	**TYPE**	**LENGTH**
Item-number	N	8
Plant-code	N	2
Sequence-number	X	3
Quantity	N	8
Total length	-	21
SHORT BAR CODE BOTTOM	**TYPE**	**LENGTH**
Selection-code	X	3
Data-code	N	3
Batch-number	X	10
Filter	-	1
Total length	-	17

DRY PACKING

The reel is packed in an anti-humidity bag to protect the devices from absorbing moisture during transportation and storage.

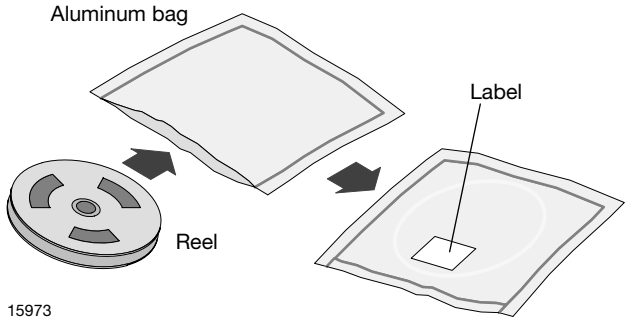

FINAL PACKING

The sealed reel is packed into a cardboard box. A secondary cardboard box is used for shipping purposes.

RECOMMENDED METHOF OF STORAGE

Dry box storage is recommended as soon as the aluminum bag has been opened to prevent moisture absorption. The following conditions should be observed, if dry boxes are not available:

- Storage temperature 10 °C to 30 °C
- Storage humidity ≤ 60 % RH max.

After more than 72 h under these conditions moisture content will be too high for reflow soldering.

In case of moisture absorption, the devices will recover to the former condition by drying under the following condition:

192 h at 40 °C + 5 °C / - 0 °C and < 5 % RH (dry air/nitrogen)
or
96 h at 60 °C + 5 °C and < 5 % RH for all device containers
or
24 h at 125 °C + 5 °C not suitable for reel or tubes.

An EIA JEDEC® standard J-STD-020 level 4 label is included on all dry bags.

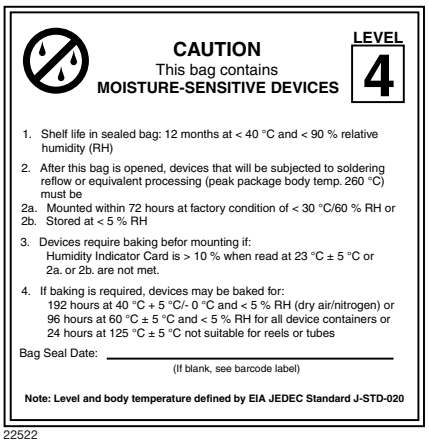

EIA JEDEC standard J-STD-020 level 4 label is included on all dry bags

THIS DOCUMENT IS SUBJECT TO CHANGE WITHOUT NOTICE. THE PRODUCTS DESCRIBED HEREIN AND THIS DOCUMENT ARE SUBJECT TO SPECIFIC DISCLAIMERS, SET FORTH AT www.vishay.com/doc?91000

ESD PRECAUTION

Proper storage and handling procedures should be followed to prevent ESD damage to the devices especially when they are removed from the antistatic shielding bag. Electrostatic sensitive devices warning labels are on the packaging.

VISHAY SEMICONDUCTORS STANDARD BAR CODE LABELS

The Vishay Semiconductors standard bar code labels are printed at final packing areas. The labels are on each packing unit and contain Vishay Semiconductors specific data.

22645

THIS DOCUMENT IS SUBJECT TO CHANGE WITHOUT NOTICE. THE PRODUCTS DESCRIBED HEREIN AND THIS DOCUMENT ARE SUBJECT TO SPECIFIC DISCLAIMERS, SET FORTH AT www.vishay.com/doc?91000

Tape and Reel Standards for SMD IR Receiver Modules

Vishay Semiconductor SMD IR Receivers are packaged on tape and reel. The following specification is based on IEC publication 286, which takes the industrial requirements for automatic insertion into account.

Absolute maximum ratings, mechanical dimensions, optical and electrical characteristics for taped devices are identical to the basic catalog types and can be found in the specifications for untaped devices.

PACKAGING

The tapes of components are available on reels. Each reel is marked with labels which contain the following information:

- Vishay
- Type
- Group
- Tape code, normally part of type name
- Production code
- Quantity

MISSING COMPONENTS

Up to 3 consecutive components may be missing if the gap is followed by at least 6 components. A maximum of 0.5 % of the components per reel quantity may be missing. At least 5 empty positions are present at the start and the end of the tape to enable tape insertion.

Tensile strength of the tape: > 15 N

NUMBER OF COMPONENTS

A. Panhead SMD: quantity per reel:

TT, SMD top view package, 1190 pcs

TR, SMD side view package, 1120 pcs

B. Heimdall: quantity per reel:

TT, Heimdall top view package, 2200 pcs

TR, Heimdall side view package, 2300 pcs

C. Heimdall without lens: quantity per reel:

WTT, top view package, 2200 pcs

WTR, side view package, 2300 pcs

D. Bugeye: quantity per reel:

TT, 2500 pcs

TR, 2500 pcs

E. AP5: quantity per reel:

TT, 2500 pcs

TR, not available in side view

F. Belobog: quantity per reel:

TT1, 1800 pcs

TT2, 7000 pcs

TR, not available in side view

G. Belobog with shield: quantity per reel:

TT1, 1500 pcs

TT2, 5000 pcs

ORDER DESIGNATION

The type designation of the device is extended by TT or TT1 for top view or TR for side view.

Example:

TSOP6238TR (reel packing)

TSOP75238TR (reel packing)

TSOP75338WTT (reel packing)

TSOP85438TT (reel packing)

TSOP85238AP5TR (reel packing)

TSOP57438TT1 (reel packing)

TSOP57238HTT1 (reel packing)

THIS DOCUMENT IS SUBJECT TO CHANGE WITHOUT NOTICE. THE PRODUCTS DESCRIBED HEREIN AND THIS DOCUMENT ARE SUBJECT TO SPECIFIC DISCLAIMERS, SET FORTH AT www.vishay.com/doc?91000

REEL DIMENSIONS FOR PANHEAD SMD AND HEIMDALL in millimeters

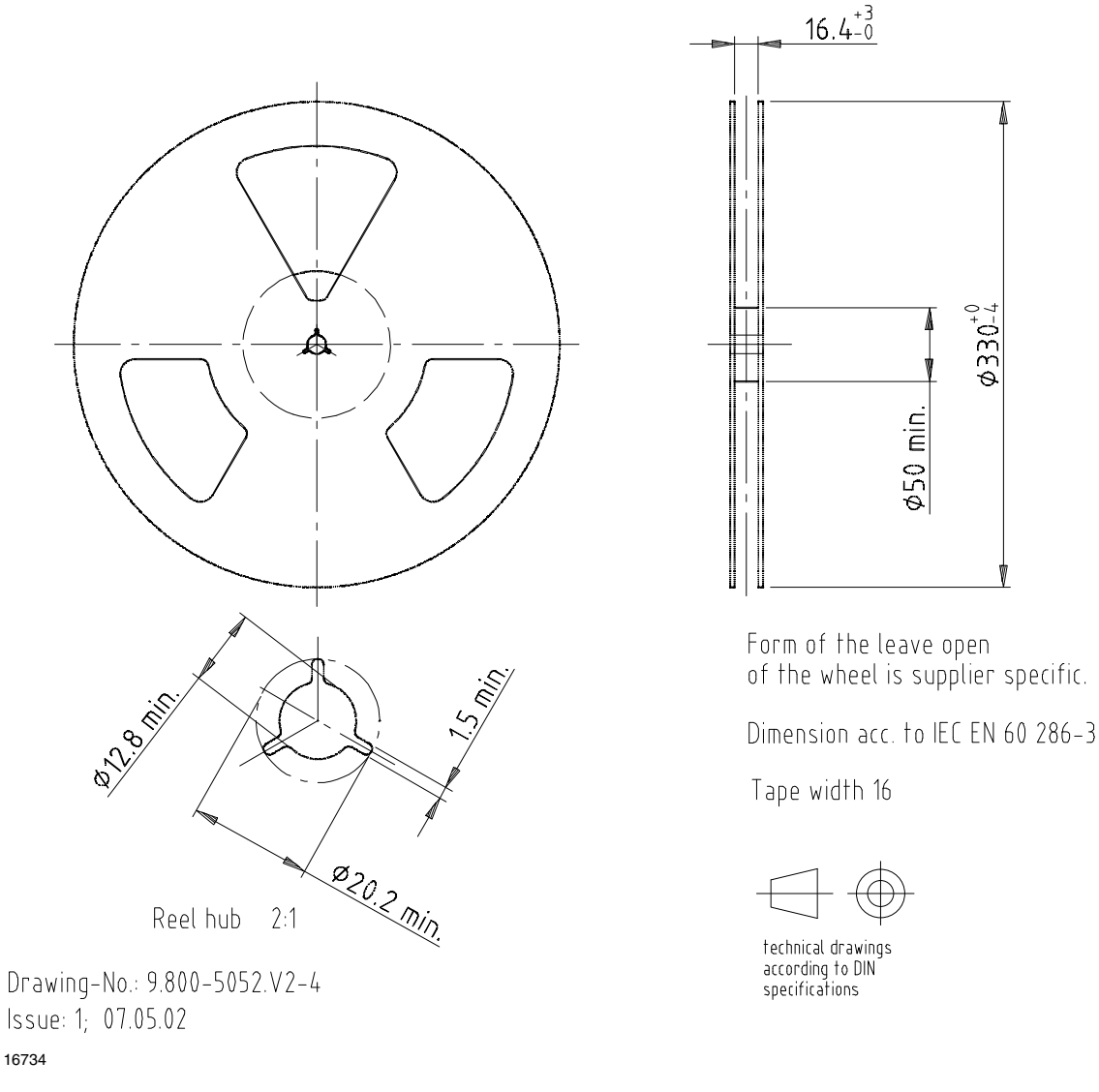

Note

- The body structure of the reel can vary

THIS DOCUMENT IS SUBJECT TO CHANGE WITHOUT NOTICE. THE PRODUCTS DESCRIBED HEREIN AND THIS DOCUMENT ARE SUBJECT TO SPECIFIC DISCLAIMERS, SET FORTH AT www.vishay.com/doc?91000

TAPING VERSION TSOP..TT (TOP VIEW) DIMENSIONS in millimeters

A. Panhead SMD (TSOP36...TT, TSOP35...TT, TSOP6...TT)

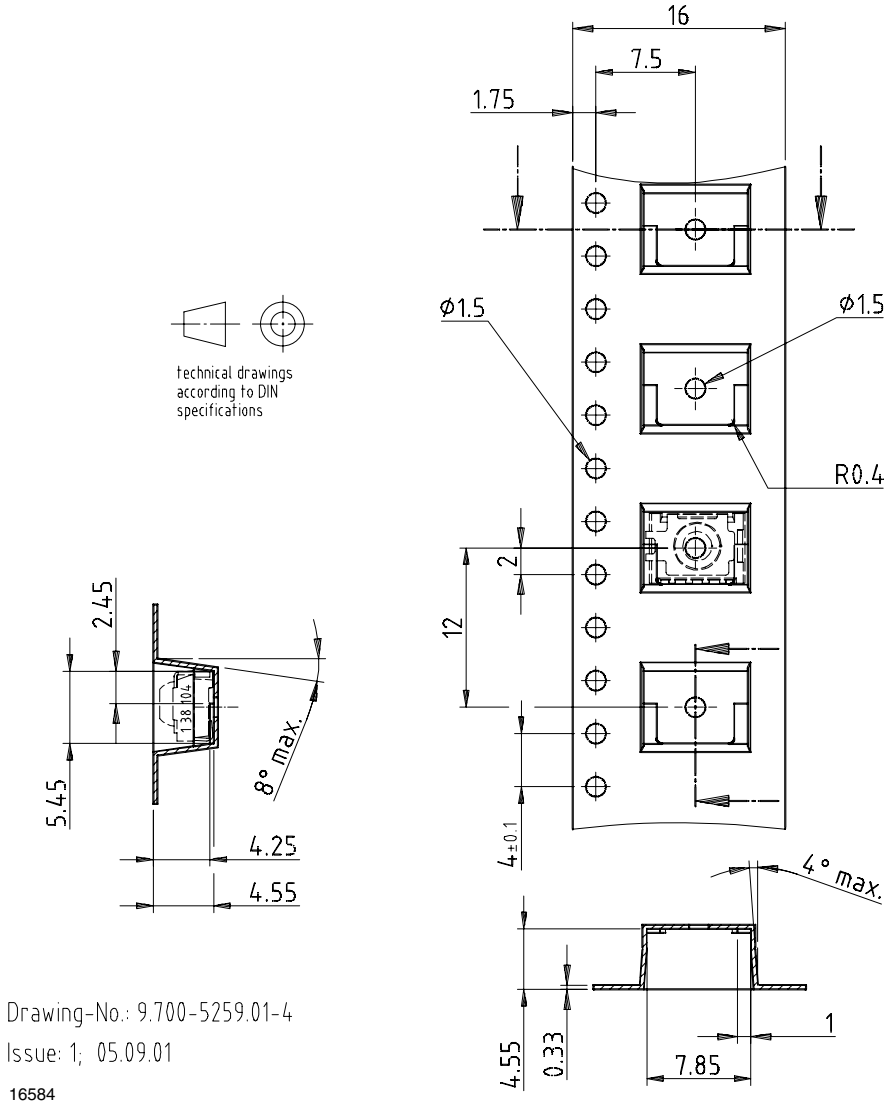

THIS DOCUMENT IS SUBJECT TO CHANGE WITHOUT NOTICE. THE PRODUCTS DESCRIBED HEREIN AND THIS DOCUMENT ARE SUBJECT TO SPECIFIC DISCLAIMERS, SET FORTH AT www.vishay.com/doc?91000

TAPING VERSION TSOP..TT (TOP VIEW) DIMENSIONS in millimeters

B. Heimdall SMD (TSOP75...TT, TSOP77...TT)

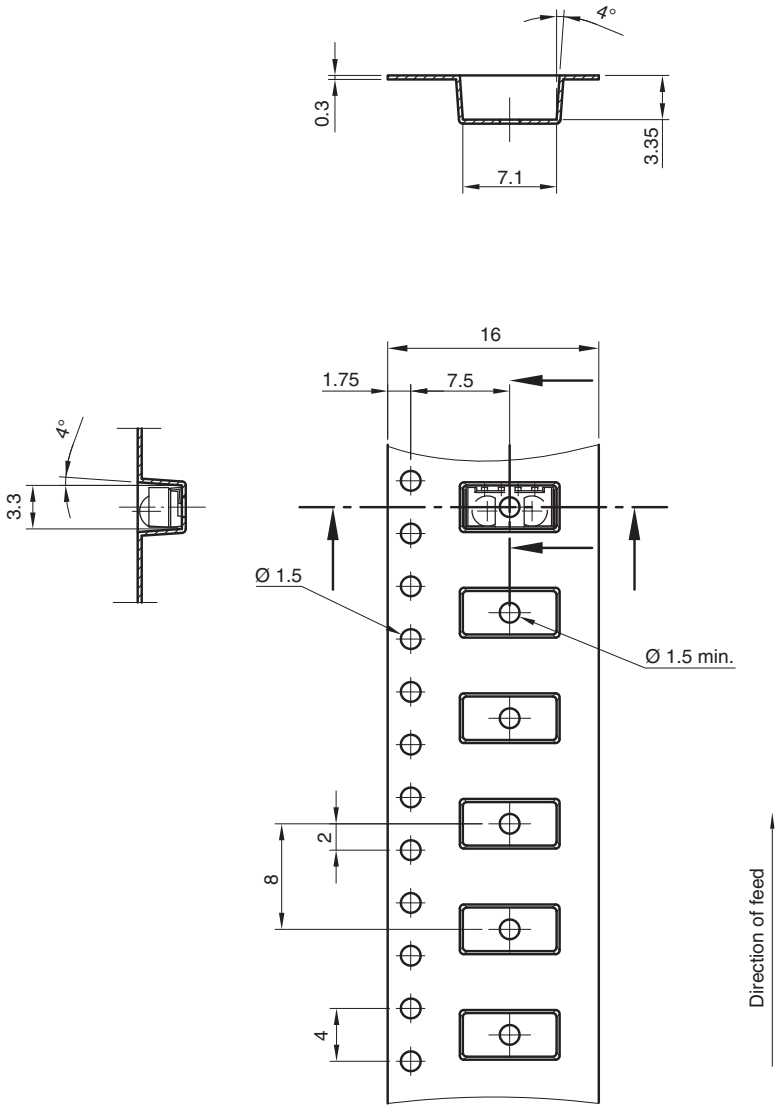

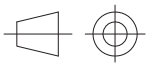

technical drawings
according to DIN
specifications

Drawing-No.: 9.700-5338.01-4
Issue: 3; 09.06.09
21578

THIS DOCUMENT IS SUBJECT TO CHANGE WITHOUT NOTICE. THE PRODUCTS DESCRIBED HEREIN AND THIS DOCUMENT ARE SUBJECT TO SPECIFIC DISCLAIMERS, SET FORTH AT www.vishay.com/doc?91000

TAPING VERSION TSOP..TT (TOP VIEW) DIMENSIONS in millimeters

C. Heimdall SMD without lens (TSOP75...WTT, TSOP77...WTT)

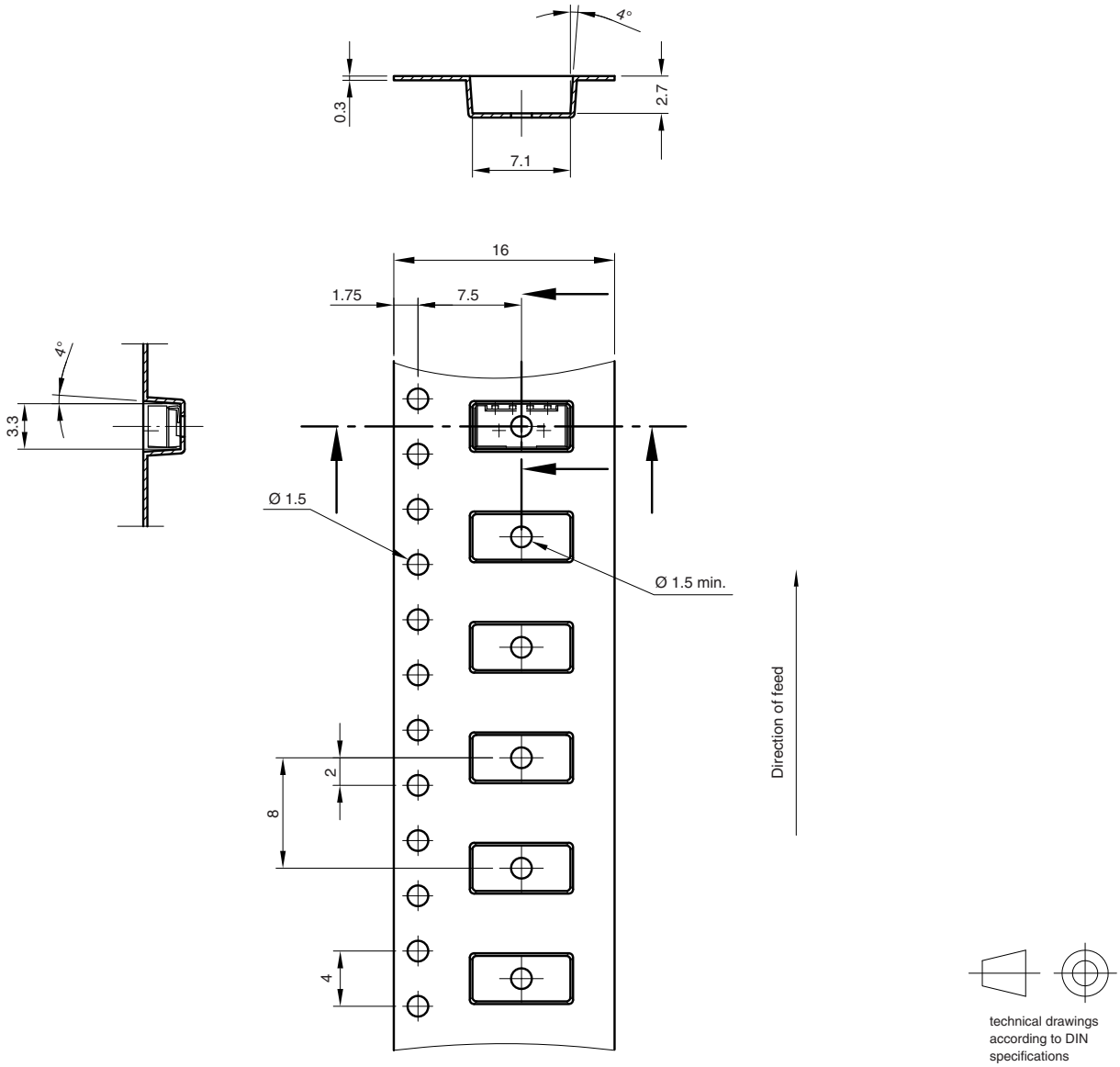

Drawing-No.: 9.700-5341.01-4
Issue: 2: 23.03.09
21666

THIS DOCUMENT IS SUBJECT TO CHANGE WITHOUT NOTICE. THE PRODUCTS DESCRIBED HEREIN AND THIS DOCUMENT ARE SUBJECT TO SPECIFIC DISCLAIMERS, SET FORTH AT www.vishay.com/doc?91000

TAPING VERSION TSOP..TT (TOP VIEW) DIMENSIONS in millimeters

D. Bugeye (TSOP85...TT)

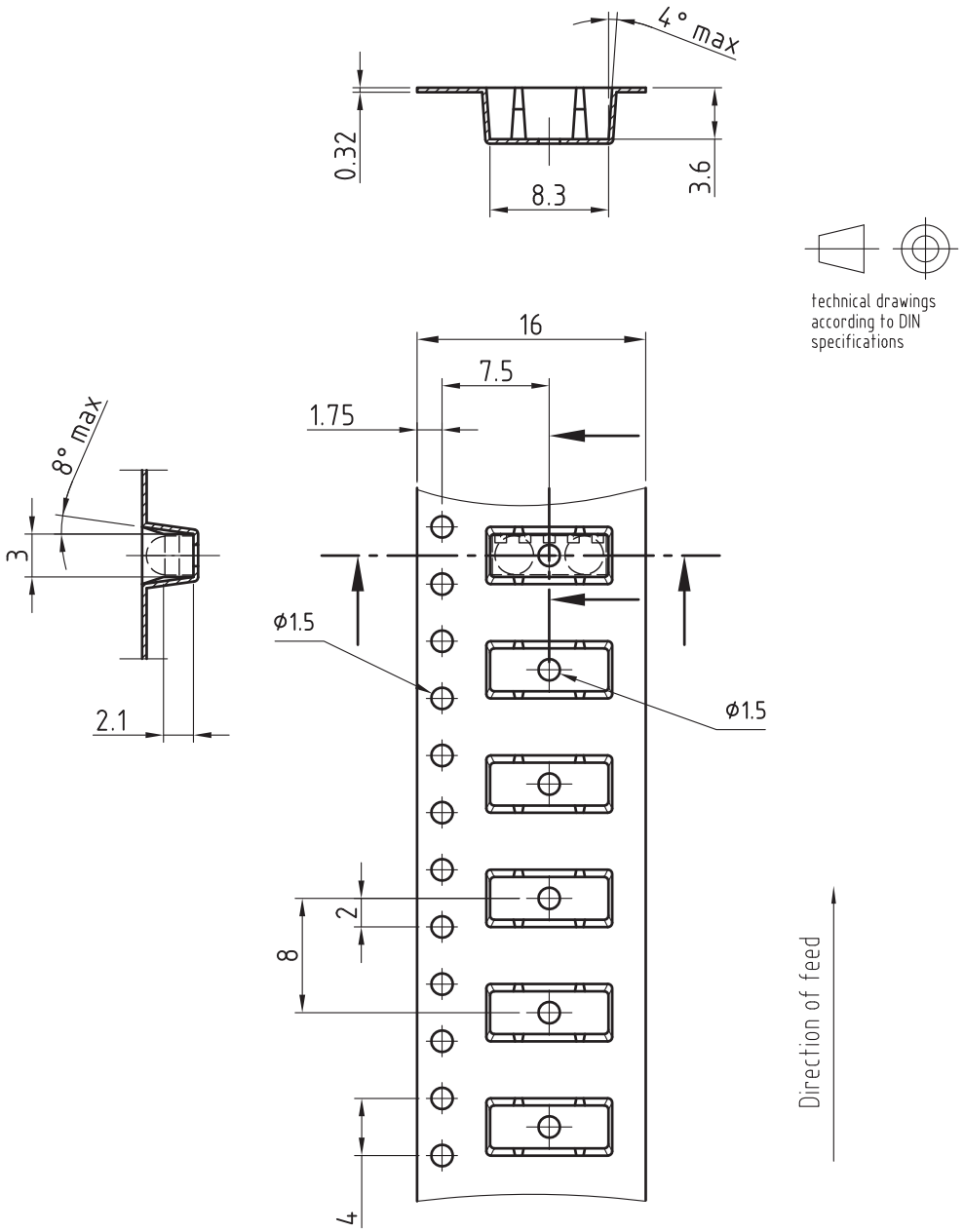

Drawing-No.: 9.700-5317.01-4
Issue: 2; 10.04.08
20629

THIS DOCUMENT IS SUBJECT TO CHANGE WITHOUT NOTICE. THE PRODUCTS DESCRIBED HEREIN AND THIS DOCUMENT ARE SUBJECT TO SPECIFIC DISCLAIMERS, SET FORTH AT www.vishay.com/doc?91000

TAPING VERSION TSOP..TT (TOP VIEW) DIMENSIONS in millimeters

E. AP5 (TSOP85...AP5TT)

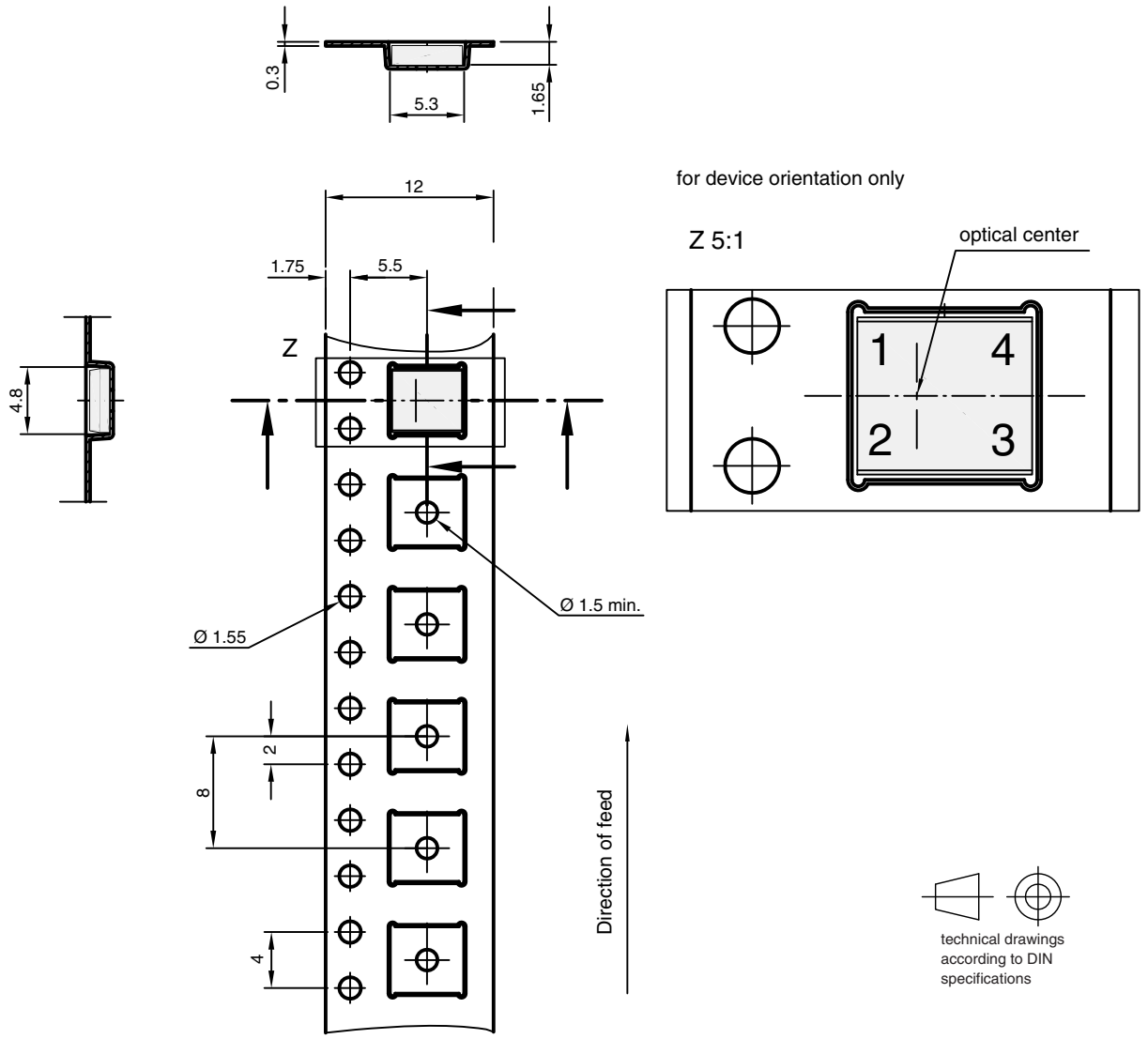

Drawing-No.: 9.700-5346.01-4
Issue: 2, 24.11.09
21945

THIS DOCUMENT IS SUBJECT TO CHANGE WITHOUT NOTICE. THE PRODUCTS DESCRIBED HEREIN AND THIS DOCUMENT ARE SUBJECT TO SPECIFIC DISCLAIMERS, SET FORTH AT www.vishay.com/doc?91000

TAPING VERSION TSOP..TT1, TSOP..TT2 (TOP VIEW) DIMENSIONS in millimeters

F. Belobog (TSOP37...TT1, TSOP37...TT2, TSOP57...TT1, TSOP57...TT2)

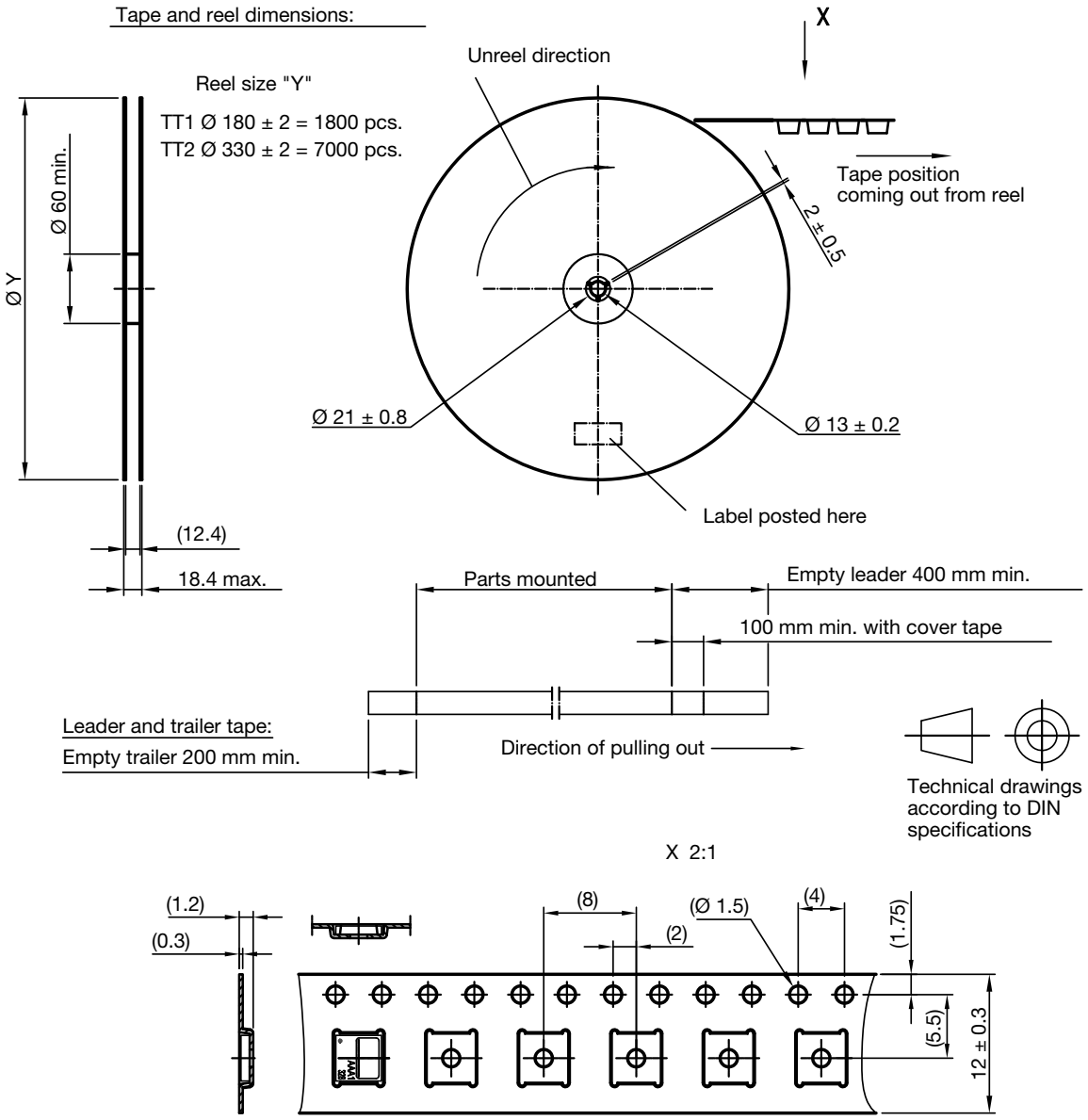

Drawing-No.: 9.700-5347.01-4
Issue: 1; 14.11.11

Not indicated tolerances ± 0.1

THIS DOCUMENT IS SUBJECT TO CHANGE WITHOUT NOTICE. THE PRODUCTS DESCRIBED HEREIN AND THIS DOCUMENT ARE SUBJECT TO SPECIFIC DISCLAIMERS, SET FORTH AT www.vishay.com/doc?91000

TAPING VERSION TSOP..TT1, TSOP..TT2 (TOP VIEW) DIMENSIONS in millimeters

G. Belobog with shield (TSOP37...HTT1, TSOP37...HTT2, TSOP57...HTT1, TSOP57...HTT2)

Tape and Reel dimensions:

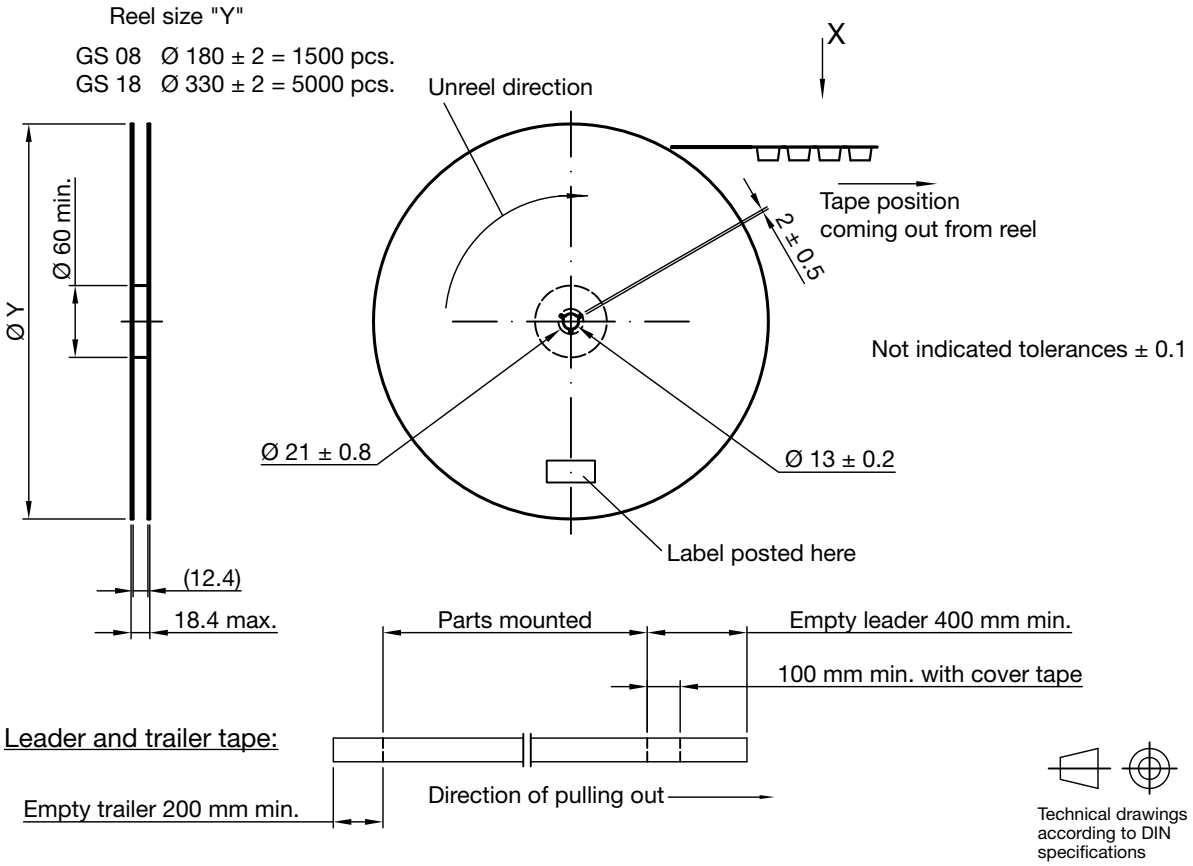

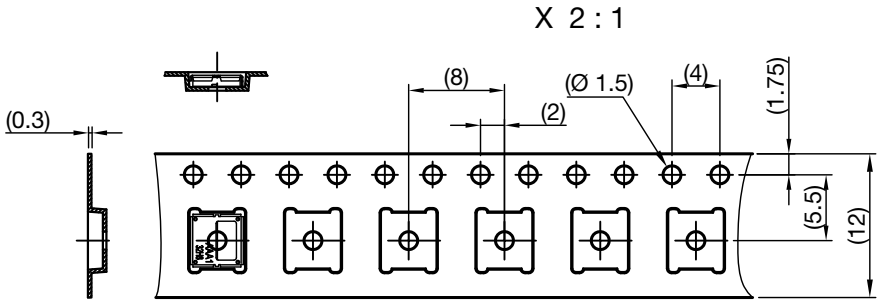

Reel dimensions and tape

Drawing-No.: 9.700-5380.01-4
Issue: 1; 28.10.13

THIS DOCUMENT IS SUBJECT TO CHANGE WITHOUT NOTICE. THE PRODUCTS DESCRIBED HEREIN AND THIS DOCUMENT ARE SUBJECT TO SPECIFIC DISCLAIMERS, SET FORTH AT www.vishay.com/doc?91000

TAPING VERSION TSOP..TR (SIDE VIEW) DIMENSIONS in millimeters

A. Panhead SMD (TSOP36...TR, TSOP35...TR, TSOP6...TR)

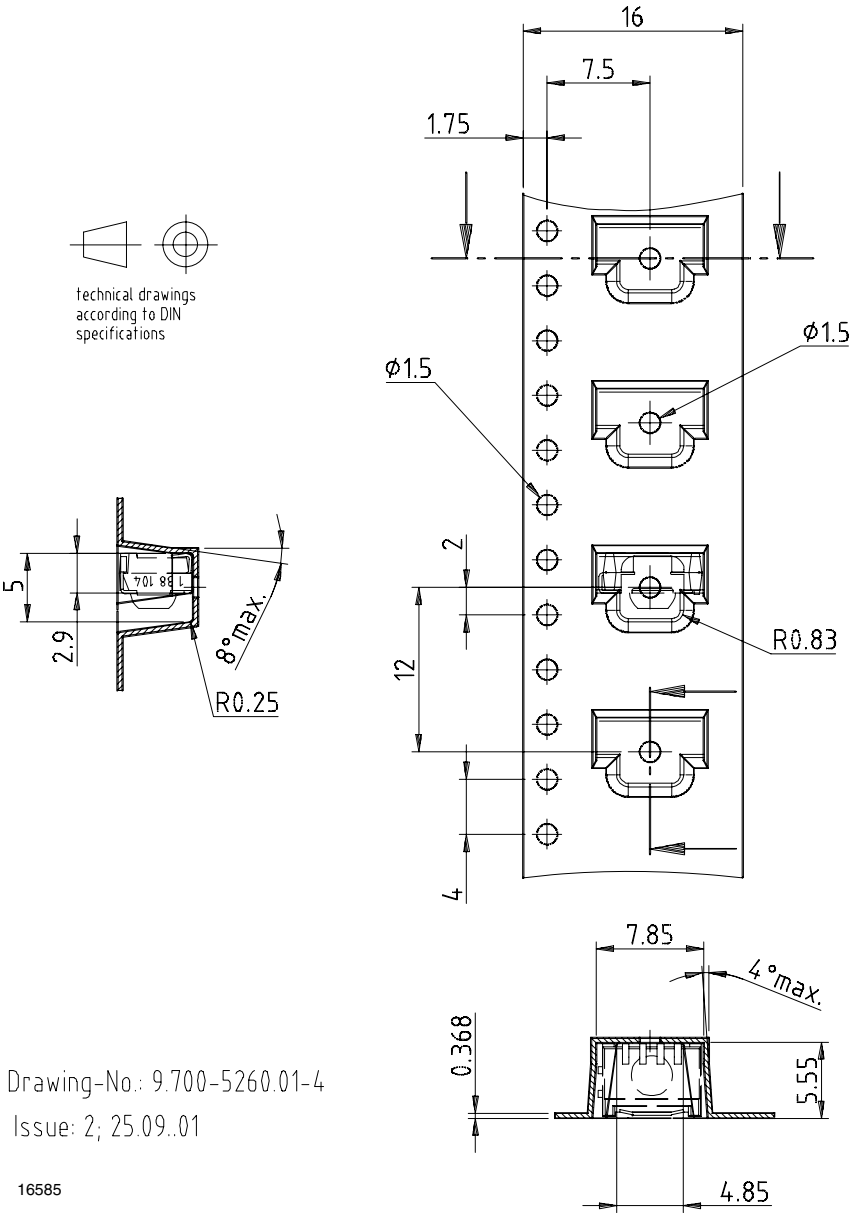

THIS DOCUMENT IS SUBJECT TO CHANGE WITHOUT NOTICE. THE PRODUCTS DESCRIBED HEREIN AND THIS DOCUMENT ARE SUBJECT TO SPECIFIC DISCLAIMERS, SET FORTH AT www.vishay.com/doc?91000

TAPING VERSION TSOP..TR (SIDE VIEW) DIMENSIONS in millimeters

B. Heimdall SMD (TSOP75..., TSOP77...)

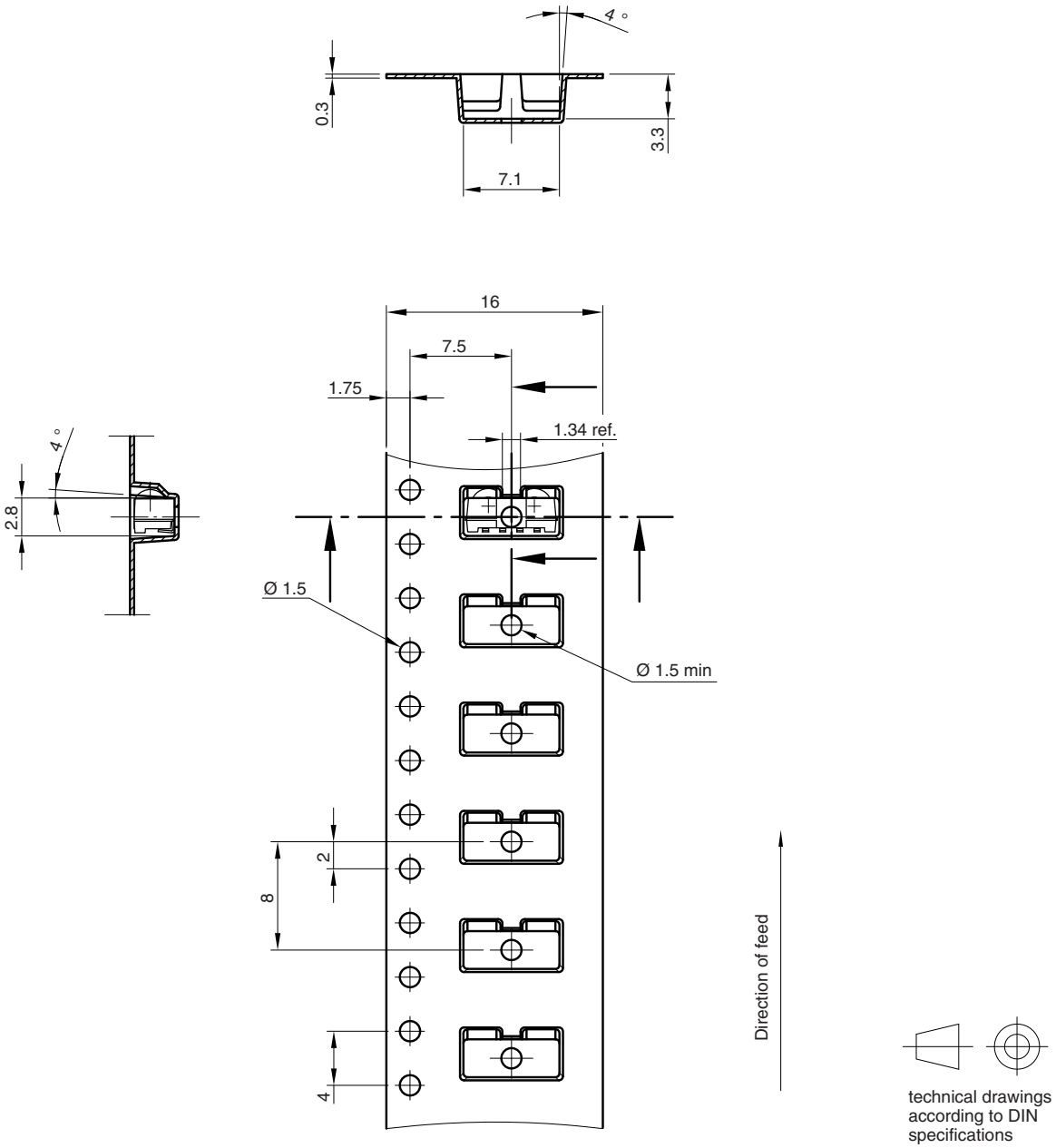

Drawing-No.: 9.700-5337.01-4
Issue: 1; 16.10.08
21577

THIS DOCUMENT IS SUBJECT TO CHANGE WITHOUT NOTICE. THE PRODUCTS DESCRIBED HEREIN AND THIS DOCUMENT ARE SUBJECT TO SPECIFIC DISCLAIMERS, SET FORTH AT www.vishay.com/doc?91000

TAPING VERSION TSOP..TR (SIDE VIEW) DIMENSIONS in millimeters

C. Heimdall SMD without lens (TSOP75...WTR, TSOP77...WTR)

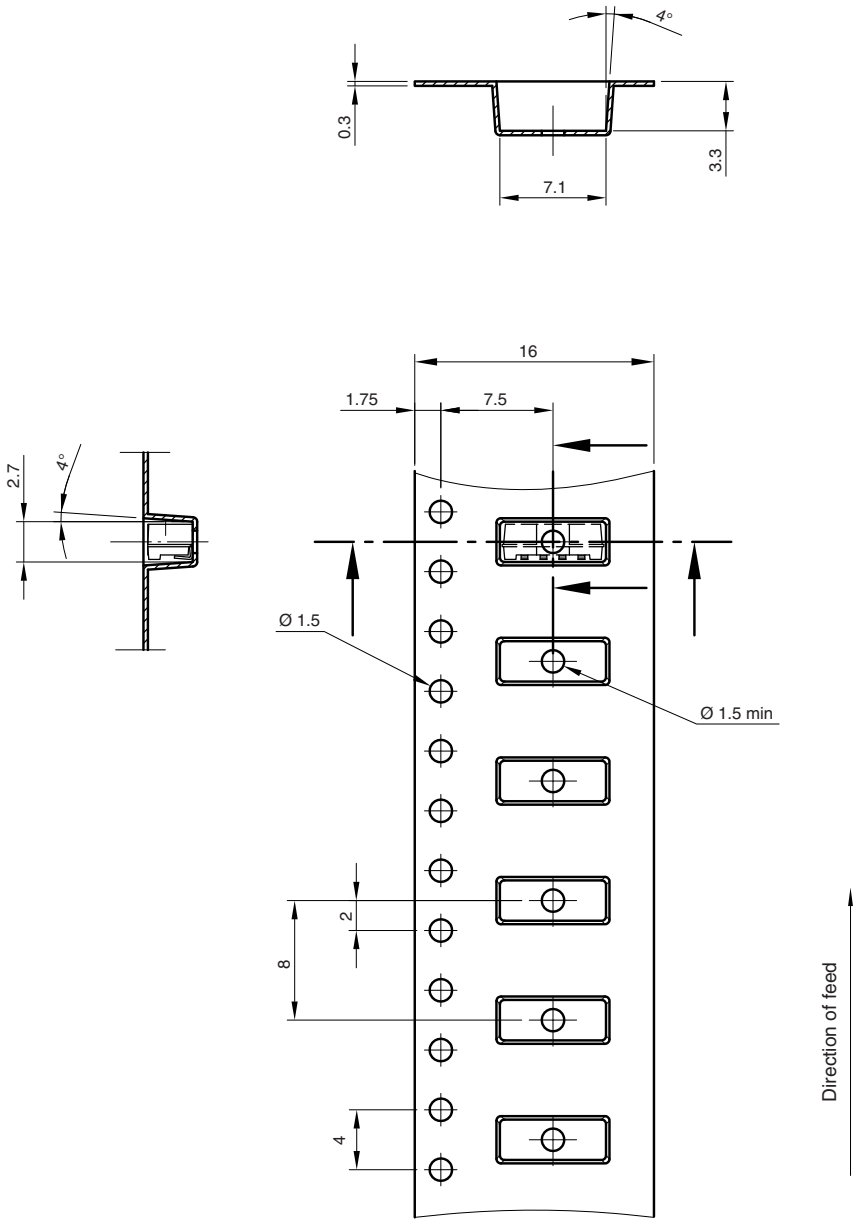

Drawing-No.: 9.700-5342.01-4
Issue: 1: 23.03.09
21785

technical drawings
according to DIN
specifications

THIS DOCUMENT IS SUBJECT TO CHANGE WITHOUT NOTICE. THE PRODUCTS DESCRIBED HEREIN AND THIS DOCUMENT ARE SUBJECT TO SPECIFIC DISCLAIMERS, SET FORTH AT www.vishay.com/doc?91000

TAPING VERSION TSOP..TR (SIDE VIEW) DIMENSIONS in millimeters

D. Bugeye (TSOP85...TR)

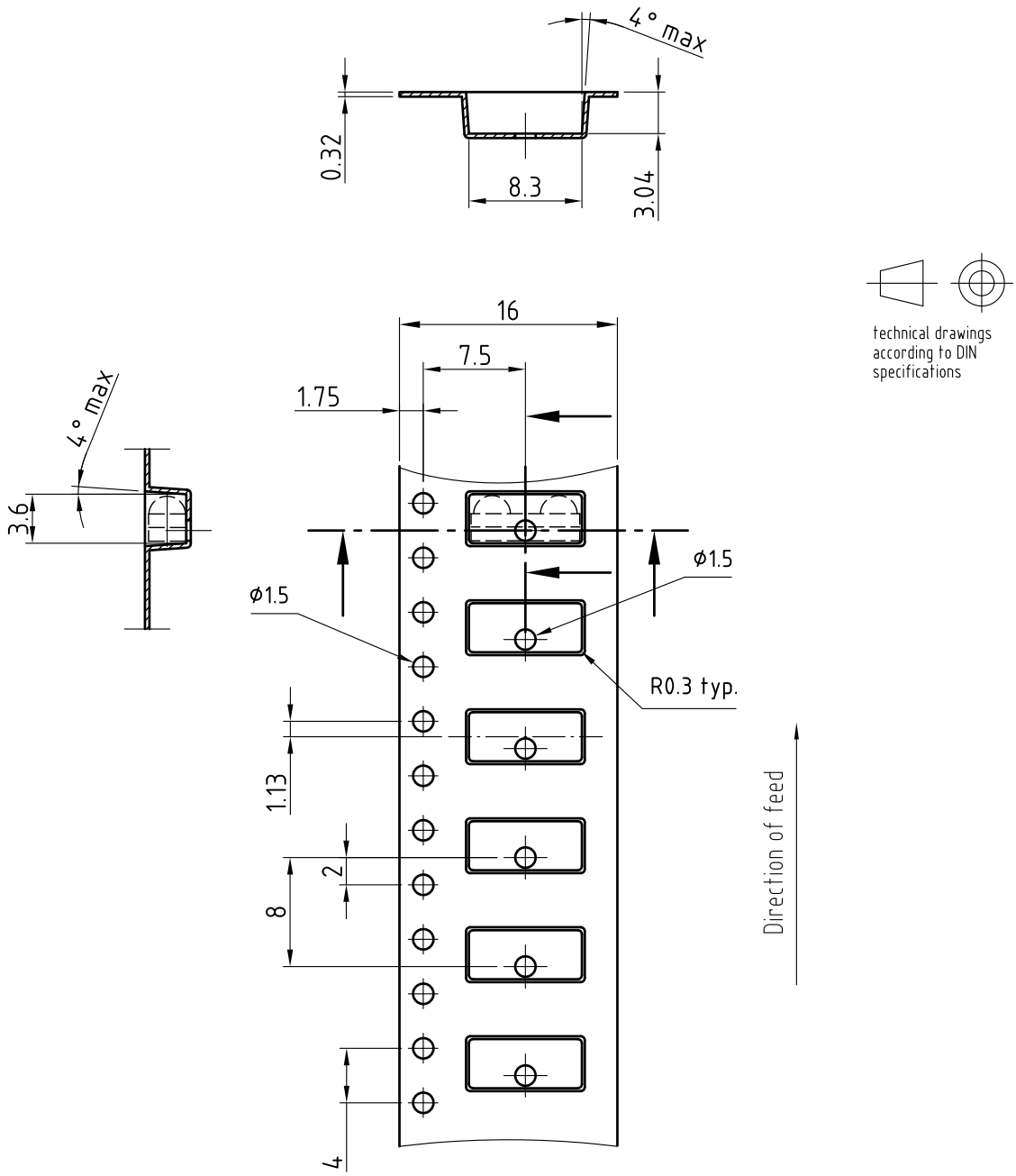

Drawing-No.: 9.700-5316.01-4
Issue: 1; 12.02.07
20628

THIS DOCUMENT IS SUBJECT TO CHANGE WITHOUT NOTICE. THE PRODUCTS DESCRIBED HEREIN AND THIS DOCUMENT ARE SUBJECT TO SPECIFIC DISCLAIMERS, SET FORTH AT www.vishay.com/doc?91000

LEADER AND TRAILER DIMENSIONS in millimeters

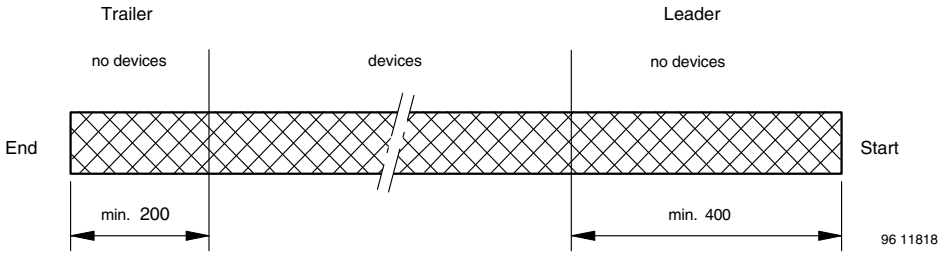

COVER TAPE REEL STRENGTH

According to DIN EN 60286-3

0.1 N to 1.3 N

300 mm/min. ± 10 mm/min.

165° to 180° peel angle

LABEL

Standard bar code labels for finished goods

The standard bar code labels are product labels and used for identification of goods. The finished goods are packed in final packing area. The standard packing units are labeled with standard bar code labels before transported as finished goods to warehouses. The labels are on each packing unit and contain Vishay Semiconductor GmbH specific data.

VISHAY SEMICONDUCTOR GmbH STANDARD BAR CODE PRODUCT LABEL (finished goods)		
PLAIN WRITING	**ABBREVIATION**	**LENGTH**
Item-description	-	18
Item-number	INO	8
Selection-code	SEL	3
LOT-/serial-number	BATCH	10
Data-code	COD	3 (YWW)
Plant-code	PTC	2
Quantity	QTY	8
Accepted by	ACC	-
Packed by	PCK	-
Mixed code indicator	MIXED CODE	-
Origin	xxxxxxx+	Company logo
LONG BAR CODE TOP	**TYPE**	**LENGTH**
Item-number	N	8
Plant-code	N	2
Sequence-number	X	3
Quantity	N	8
Total length	-	21
SHORT BAR CODE TOP	**TYPE**	**LENGTH**
Selection-code	X	3
Data-code	N	3
Batch-number	X	10
Filter	-	1
Total length	-	17

THIS DOCUMENT IS SUBJECT TO CHANGE WITHOUT NOTICE. THE PRODUCTS DESCRIBED HEREIN AND THIS DOCUMENT ARE SUBJECT TO SPECIFIC DISCLAIMERS, SET FORTH AT www.vishay.com/doc?91000

DRY PACKAGING

The reel is packed in an anti-humidity bag to protect the devices from absorbing moisture during transportation and storage.

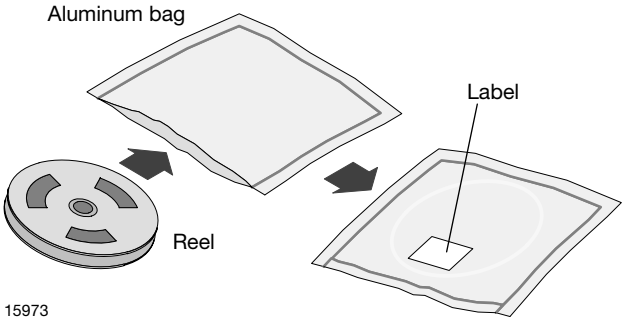

15973

RECOMMENDED METHOD OF STORAGE

Dry box storage is recommended as soon as the aluminum bag has been opened to prevent moisture absorption. The following conditions should be observed, if dry boxes are not available:

- Storage temperature 10 °C to 30 °C
- Storage humidity ≤ 60 % RH max.

After more than 72 h under these conditions moisture content will be too high for reflow soldering.

In case of moisture absorption, the devices will recover to the former condition by drying under the following condition:

192 h at 40 °C + 5 °C / - 0 °C and < 5 % RH (dry air/nitrogen)
or
96 h at 60 °C + 5 °C and < 5 % RH for all device containers
or
24 h at 125 °C + 5 °C not suitable for reel or tubes.

An EIA JEDEC® standard JSTD-020 level 4 label is included on all dry bags.

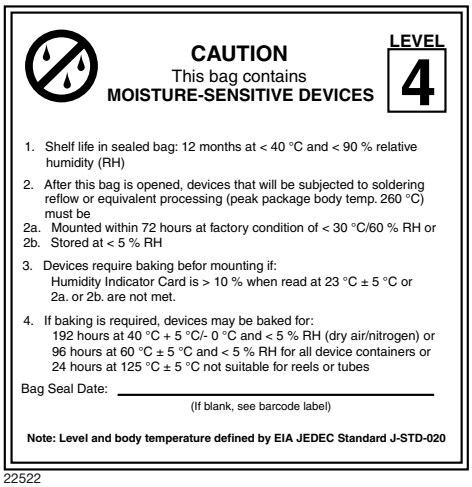
CAUTION
This bag contains
MOISTURE-SENSITIVE DEVICES
LEVEL 4

1. Shelf life in sealed bag: 12 months at < 40 °C and < 90 % relative humidity (RH)
2. After this bag is opened, devices that will be subjected to soldering reflow or equivalent processing (peak package body temp. 260 °C) must be
2a. Mounted within 72 hours at factory condition of < 30 °C/60 % RH or
2b. Stored at < 5 % RH
3. Devices require baking befor mounting if:
Humidity Indicator Card is > 10 % when read at 23 °C ± 5 °C or 2a. or 2b. are not met.
4. If baking is required, devices may be baked for:
192 hours at 40 °C + 5 °C/- 0 °C and < 5 % RH (dry air/nitrogen) or
96 hours at 60 °C ± 5 °C and < 5 % RH for all device containers or
24 hours at 125 °C ± 5 °C not suitable for reels or tubes

Bag Seal Date: _____
(If blank, see barcode label)

Note: Level and body temperature defined by EIA JEDEC Standard J-STD-020

22522

EIA JEDEC standard JSTD-020 level 4 label is included on all dry bags

ESD PRECAUTION

Proper storage and handling procedures should be followed to prevent ESD damage to the devices especially when they are removed from the antistatic shielding bag. Electrostatic sensitive devices warning labels are on the packaging.

VISHAY SEMICONDUCTORS STANDARD BAR CODE LABELS

The Vishay Semiconductors standard bar code labels are printed at final packing areas. The labels are on each packing unit and contain Vishay Semiconductors specific data.

16962

OUTER PACKAGING

The sealed reel is packed into a pizza box.

CARTON BOX DIMENSIONS in millimeters

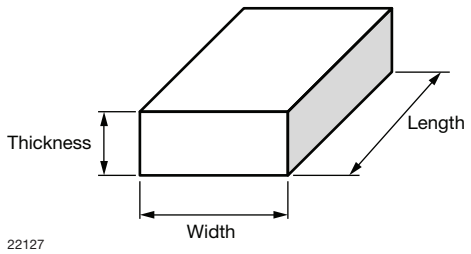

22127

	THICKNESS	WIDTH	LENGTH
Pizza Box (SMD and Heimdall) (Taping in Reels)	50	340	340

THIS DOCUMENT IS SUBJECT TO CHANGE WITHOUT NOTICE. THE PRODUCTS DESCRIBED HEREIN AND THIS DOCUMENT ARE SUBJECT TO SPECIFIC DISCLAIMERS, SET FORTH AT www.vishay.com/doc?91000

Disclaimer

ALL PRODUCT, PRODUCT SPECIFICATIONS AND DATA ARE SUBJECT TO CHANGE WITHOUT NOTICE TO IMPROVE RELIABILITY, FUNCTION OR DESIGN OR OTHERWISE.

Vishay Intertechnology, Inc., its affiliates, agents, and employees, and all persons acting on its or their behalf (collectively, "Vishay"), disclaim any and all liability for any errors, inaccuracies or incompleteness contained in any datasheet or in any other disclosure relating to any product.

Vishay makes no warranty, representation or guarantee regarding the suitability of the products for any particular purpose or the continuing production of any product. To the maximum extent permitted by applicable law, Vishay disclaims (i) any and all liability arising out of the application or use of any product, (ii) any and all liability, including without limitation special, consequential or incidental damages, and (iii) any and all implied warranties, including warranties of fitness for particular purpose, non-infringement and merchantability.

Statements regarding the suitability of products for certain types of applications are based on Vishay's knowledge of typical requirements that are often placed on Vishay products in generic applications. Such statements are not binding statements about the suitability of products for a particular application. It is the customer's responsibility to validate that a particular product with the properties described in the product specification is suitable for use in a particular application. Parameters provided in datasheets and/or specifications may vary in different applications and performance may vary over time. All operating parameters, including typical parameters, must be validated for each customer application by the customer's technical experts. Product specifications do not expand or otherwise modify Vishay's terms and conditions of purchase, including but not limited to the warranty expressed therein.

Except as expressly indicated in writing, Vishay products are not designed for use in medical, life-saving, or life-sustaining applications or for any other application in which the failure of the Vishay product could result in personal injury or death. Customers using or selling Vishay products not expressly indicated for use in such applications do so at their own risk. Please contact authorized Vishay personnel to obtain written terms and conditions regarding products designed for such applications.

No license, express or implied, by estoppel or otherwise, to any intellectual property rights is granted by this document or by any conduct of Vishay. Product names and markings noted herein may be trademarks of their respective owners.

Material Category Policy

Vishay Intertechnology, Inc. hereby certifies that all its products that are identified as RoHS-Compliant fulfill the definitions and restrictions defined under Directive 2011/65/EU of The European Parliament and of the Council of June 8, 2011 on the restriction of the use of certain hazardous substances in electrical and electronic equipment (EEE) - recast, unless otherwise specified as non-compliant.

Please note that some Vishay documentation may still make reference to RoHS Directive 2002/95/EC. We confirm that all the products identified as being compliant to Directive 2002/95/EC conform to Directive 2011/65/EU.

Vishay Intertechnology, Inc. hereby certifies that all its products that are identified as Halogen-Free follow Halogen-Free requirements as per JEDEC JS709A standards. Please note that some Vishay documentation may still make reference to the IEC 61249-2-21 definition. We confirm that all the products identified as being compliant to IEC 61249-2-21 conform to JEDEC JS709A standards.

Mouser Electronics

Authorized Distributor

Click to View Pricing, Inventory, Delivery & Lifecycle Information:

Vishay:
TSOP6138TR TSOP6136TR TSOP6156TR TSOP6130TR TSOP6130TT TSOP6133TR TSOP6133TT TSOP6136TT TSOP6138TT TSOP6140TR TSOP6140TT TSOP6156TT