1.0 PERFORMANCE
1.1 FREQUENCY RANGE: DC–11GHz
1.2 VOLTAGE RATING: 1000V RMS (sea level)
1.3 NOMINAL IMPEDANCE: 50 OHMS
1.4 DWV: 2500V RMS @ 60Hz (sea level)
1.5 TEMPERATURE RANGE: –65°C TO +165°C
2.0 MATERIALS
2.1 DIELECTRIC: TEFLON, ASTM–D–1710
2.2 CENTER CONTACT: BeCu, ASTM–B–196
2.5 ALL OTHER METAL PARTS: BRASS, ASTM–B–16
2.6 GASKET: SILICON RUBBER, ZZ–R–765, GR. 50, RED
3.0 FINISHES
3.1 CENTER CONTACT: SEE TABLE
3.2 ALL OTHER METAL PARTS: SEE TABLE
4.0 MECHANICAL
4.1 INTERFACE IN ACCORDANCE WITH MIL–STD–348

DWG NO. OL–1095A–1 REV. B

PLATING VARIATIONS

PART NUMBER	BODY	CONTACT
UG–1095A/U	NICKEL	SILVER
UG–1095A/U NI/GOLD	NICKEL	GOLD
UG–1095A/U SI	SILVER	SILVER
UG–1095A/U SI/GOLD	SILVER	GOLD

DO NOT SCALE DRAWING

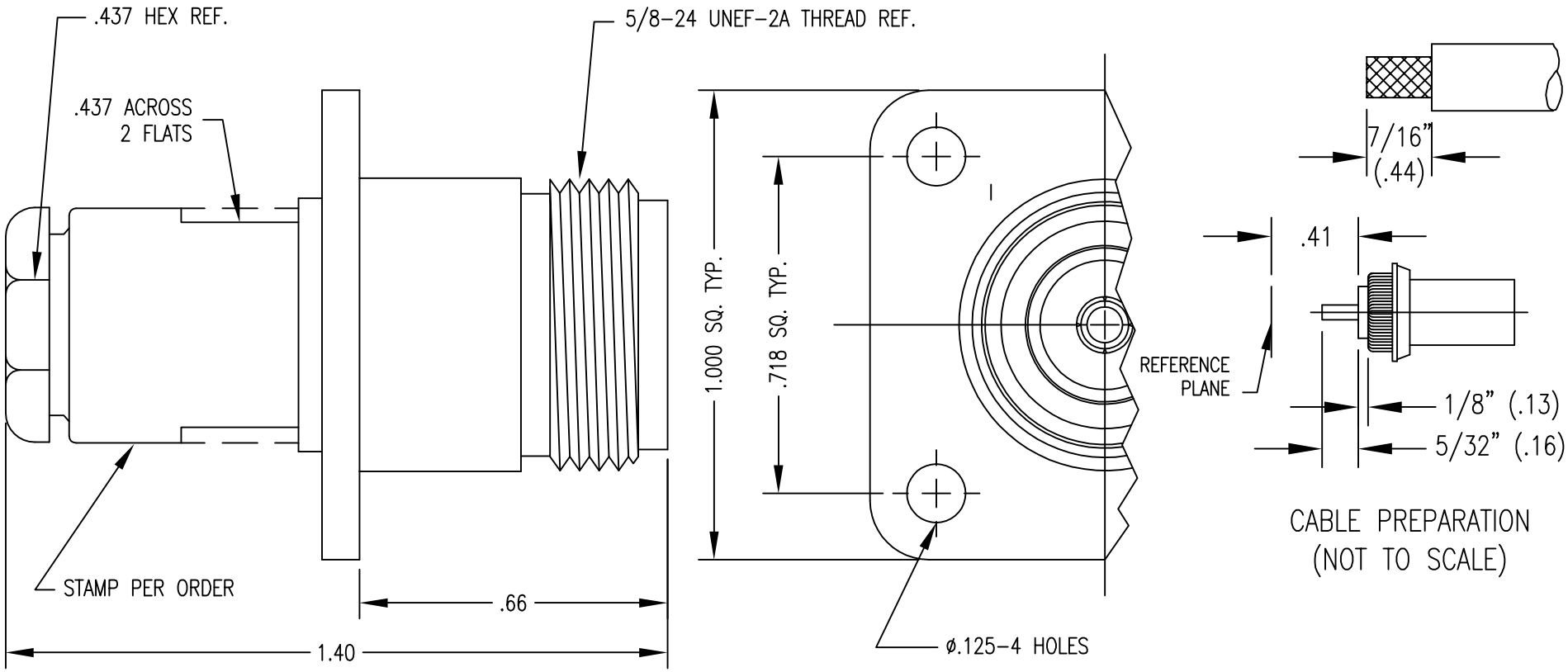

Rev.	Revisions	Disp.	Date	Dwn.	Appd.
B	REDRAWN, ADDED CABLE STRIP DIMS		04/30/04	DT	FSH
A	ORIGINAL	NEW	01/10/97		

Ref.: | REMOVE ALL BURRS AND SHARP EDGES .005 MAX. | INTERPRET PER ASME Y14.5M–1994

THIS DRAWING CONTAINS CONFIDENTIAL INFORMATION PROPRIETARY TO SAN–TRON INC. IT MUST NOT BE REPRODUCED OR DISCLOSED TO OTHERS OR USED IN ANY OTHER WAY, IN WHOLE OR PART EXCEPT AS AUTHORIZED IN WRITING BY SAN–TRON INCORPORATED.

UNLESS OTHERWISE SPECIFIED:
ALL DIMENSIONS ARE IN INCHES.
ALL DIMENSIONS ARE AFTER PLATING.
.XXX= ±.005 ALL MACHINED SURFACES 63√ MAX.
.XX= ±.01 ANG.±1/2° FRACTIONAL= ±1/64
◎ .004 MAX. TIR. ⊥ AXIS .001

THIRD ANGLE PROJECTION

DWN	KC	01/10/97
CHKD	SJS	01/14/97
APPR		

SAN-TRON, INC.
4 NEWBURYPORT TPK. IPSWICH MA USA 01938
TEL: 978 - 356 -1585 FAX: 978 - 356 -1573
WWW. santron.com E MAIL: santron@santron.com

TITLE: N PANEL JACK FOR RG–55, 58, 223/U CABLES

MATERIAL: SEE NOTE 2.0
FINISH: SEE NOTE 3.0
CAGE CODE: 50896
SCALE X:X
DWG NO. OL–1095A–1 REV. B