Empowered by Innovation NEC

Compact and powerful

78K MICROCONTROLLERS

High-Perfomance

V850 MICROCONTROLLERS

NEC ELECTRONICS

For further information,
please contact:

NEC Electronics Corporation
1753, Shimonumabe,
Nakahara-ku,
Kawasaki, Kanagawa 211-8668,
Japan
Tel: 044-435-5111
http://www.necel.com/

[America]

NEC Electronics America, Inc.
2880 Scott Blvd.
Santa Clara, CA 95050-2554,
U.S.A.
Tel: 408-588-6000
800-366-9782
http://www.am.necel.com/

[Europe]

NEC Electronics (Europe) GmbH
Arcadiastrasse 10
40472 Düsseldorf, Germany
Tel: 0211-65030
http://www.eu.necel.com/

Hanover Office
Podbielskistrasse 166 B
30177 Hannover
Tel: 0 511 33 40 2-0

Munich Office
Werner-Eckert-Strasse 9
81829 München
Tel: 0 89 92 10 03-0

Stuttgart Office
Industriestrasse 3
70565 Stuttgart
Tel: 0 711 99 01 0-0

United Kingdom Branch
Cygnus House, Sunrise Parkway
Linford Wood, Milton Keynes
MK14 6NP, U.K.
Tel: 01908-691-133

Succursale Française
9, rue Paul Dautier, B.P. 52
78142 Velizy-Villacoublay Cédex
France
Tel: 01-3067-5800

Sucursal en España
Juan Esplandiu, 15
28007 Madrid, Spain
Tel: 091-504-2787

Tyskland Filial
Täby Centrum
Entrance S (7th floor)
18322 Täby, Sweden
Tel: 08 638 72 00

Filiale Italiana
Via Fabio Filzi, 25/A
20124 Milano, Italy
Tel: 02-667541

Branch The Netherlands
Steijgerweg 6
5616 HS Eindhoven
The Netherlands
Tel: 040 265 40 10

[Asia & Oceania]

NEC Electronics (China) Co., Ltd
7th Floor, Quantum Plaza,
No. 27 ZhiChunLu Haidian
District, Beijing 100083, P.R.
China
TEL: 010-8235-1155
http://www.cn.necel.com/

NEC Electronics Shanghai Ltd.
Room 2511-2512,
Bank of China Tower,
200 Yincheng Road Central,
Pudong New Area, Shanghai P.R.
China P.C:200120
Tel: 021-5888-5400
http://www.cn.necel.com/

NEC Electronics Hong Kong Ltd.
12/F., Cityplaza 4,
12 Taikoo Wan Road, Hong Kong
Tel: 2886-9318
http://www.hk.necel.com/

NEC Electronics Taiwan Ltd.
7F, No. 363 Fu Shing North Road
Taipei, Taiwan, R. O. C.
Tel: 02-8175-9600
http://www.tw.necel.com/

NEC Electronics Singapore Pte. Ltd.
238A Thomson Road,
#12-08 Novena Square,
Singapore 307684
Tel: 6253-8311
http://www.sg.necel.com/

NEC Electronics Korea Ltd.
11F., Samik Lavied or Bldg., 720-2,
Yeoksam-Dong, Kangnam-Ku,
Seoul, 135-080, Korea
Tel: 02-558-3737
http://www.kr.necel.com/

G06.11'

Document No. U17676EJ4V0SG00 (4th edition)
Date Published February 2007 N CP(K)

Printed in Japan

Empower your creativity

78K

Embedded Controller

8-bit Single-chip Microcontrollers

78K0, 78K0S MICROCONTROLLERS

Empowered by Innovation

NEC

Device				Memory				Clock			I/O	Bus	Timer						Serial Interface										OCD	Peripheral Functions						Others		
Applications	CPU core	Commercial name	Product name	ROM size [K bytes]	ROM type	Single Voltage Flash	RAM size [bytes]	Maximum operating frequency [MHz]	Internal oscillator [Hz]	Subclock (32.768 kHz)	I/O port	External bus data/address	16-bit timer	8-bit timer	Other timer	Watch timer	Watchdog timer	PWM output	UART	UART (supporting LIN)	UART/CSI	UART (supporting LIN)/CSI	CSI	CSI/I²C	CSI with automatic transmission/reception function	I²C	IEBus	CAN	On-chip debug	LCD [segment x common]	A/D converter 10-bit	A/D converter 8-bit	8-bit D/A converter	Multiplier/divider [bit x bit, bit ÷ bit]	Other functions	Power supply voltage [V]	Package (size [mm])	In-circuit emulator, Emulation board
General Purpose ALL Flash	78K0S	78K0S/KU1+	μPD78F9200	1	Flash	√	128	10	8 M, 240 k	–	8	–/–	1	1	–	–	1	16-bit x 1, 8-bit x 1	–	–	–	–	–	–	–	–	–	–	–	–	4	–	–	–	POC (2.1 V ± 0.1 V), LVI	2.0 to 5.5	10-SSOP (5.72)	QB-MINI2 (MINICUBE2) QB-78K0SKX1 (IECUBE) IE-78K0S-NS/-A, IE-789234-NS-EM1
			μPD78F9201	2
			μPD78F9202	4
		78K0S/KY1+	μPD78F9210	1	Flash	√	128	10	8 M, 240 k	–	14	–/–	1	1	–	–	1	16-bit x 1, 8-bit x 1	–	–	–	–	–	–	–	–	–	–	–	–	4	–	–	–	POC (2.1 V ± 0.1 V), LVI	2.0 to 5.5	16-SSOP (5.72)
			μPD78F9211	2																																	16-WLCSP (2 x 2.3)
			μPD78F9212	4
			μPD78F9510	1																											–						16-SSOP (5.72)
			μPD78F9511	2
			μPD78F9512	4
		78K0S/KA1+	μPD78F9221	2	Flash	√	128	10	8 M, 240 k	–	17	–/–	1	2	–	–	1	16-bit x 1, 8-bit x 1	–	1	–	–	–	–	–	–	–	–	–	–	4	–	–	–	POC (2.1 V ± 0.1 V), LVI	2.0 to 5.5	20-SSOP (7.62)
			μPD78F9222	4			256
			μPD78F9521	2			128																								–
			μPD78F9522	4			256
		78K0S/KB1+	μPD78F9232	4	Flash	√	256	10	8 M, 240 k	–	26	–/–	1	2	–	–	1	16-bit x 1, 8-bit x 1	–	1	–	–	–	–	–	–	–	–	–	–	4	–	–	8 x 8	POC (2.1 V ± 0.1 V), LVI	2.0 to 5.5	30-SSOP (7.62)
			μPD78F9234	8
			μPD78F9532	4																											–
			μPD78F9534	8
	78K0	78K0/KB2	μPD78F0500	8	Flash	√	512	20	8 M, 240 k	–	23	–/–	1	4	–	–	1	16-bit x 1, 8-bit x 4	–	1	1	–	–	–	–	1	–	–	–	–	4	–	–	–	POC, LVI	1.8 to 5.5	30-SSOP (7.62)	QB-MINI2 (MINICUBE2) QB-78K0KX2 (IECUBE)
			μPD78F0501	16			768
			μPD78F0502	24			1024																														36-FLGA (4 x 4)
			μPD78F0503	32
			μPD78F0503D																										√
		78K0/KC2 (44-pin)	μPD78F0511	16	Flash	√	768	20	8 M, 240 k	√	37	–/–	1	4	–	1	1	16-bit x 1, 8-bit x 4	–	1	1	–	–	–	–	1	–	–	–	–	8	–	–	–	POC, LVI	1.8 to 5.5	44-LQFP (10 x 10)
			μPD78F0512	24			1024
			μPD78F0513	32
			μPD78F0513D																										√
		78K0/KC2 (48-pin)	μPD78F0511	16			768				41																		–								48-LQFP (7 x 7)
			μPD78F0512	24			1024
			μPD78F0513	32
			μPD78F0514	48			2048																											16 x 16 32 ÷ 16
			μPD78F0515	60			3072
			μPD78F0515D																										√
		78K0/KD2	μPD78F0521	16	Flash	√	768	20	8 M, 240 k	√	45	–/–	1	4	–	1	1	16-bit x 1, 8-bit x 4	–	1	1	–	–	–	–	1	–	–	–	–	8	–	–	–	POC, LVI	1.8 to 5.5	52-LQFP (10 x 10)
			μPD78F0522	24			1024
			μPD78F0523	32
			μPD78F0524	48			2048																											16 x 16 32 ÷ 16
			μPD78F0525	60			3072
			μPD78F0526	96			5120
			μPD78F0527	128			7168
			μPD78F0527D																										√
		78K0/KE2	μPD78F0531	16	Flash	√	768	20	8 M, 240 k	√	55	–/–	1	4	–	1	1	16-bit x 1, 8-bit x 4	–	1	1	–	–	–	–	1	–	–	–	–	8	–	–	–	POC, LVI	1.8 to 5.5	64-LQFP (10 x 10) 64-LQFP (12 x 12) 64-LQFP (14 x 14) 64-TQFP (7 x 7) 64-FLGA (5 x 5)
			μPD78F0532	24			1024
			μPD78F0533	32
			μPD78F0534	48			2048						2					16-bit x 2, 8-bit x 4					1											16 x 16 32 ÷ 16
			μPD78F0535	60			3072
			μPD78F0536	96			5120
			μPD78F0537	128			7168
			μPD78F0537D																										√
		78K0/KF2	μPD78F0544	48	Flash	√	2048	20	8 M, 240 k	√	71	–/–	2	4	–	1	1	16-bit x 2, 8-bit x 4	–	1	1	–	1	–	1	1	–	–	–	–	8	–	–	16 x 16 32 ÷ 16	POC, LVI	1.8 to 5.5	80-LQFP (12 x 12) 80-LQFP (14 x 14)
			μPD78F0545	60			3072
			μPD78F0546	96			5120
			μPD78F0547	128			7168
			μPD78F0547D																										√
General Purpose	78K0	78K0/KB1	μPD780101	8	Mask	–	512	12	240 k	–	22	–/–	1	3	–	–	1	16-bit x 1, 8-bit x 3	–	1	–	–	1	–	–	–	–	–	–	–	4	–	–	–	POC, LVI, CLM	2.5 to 5.5	30-SSOP (7.62)	QB-78K0KX1H (IECUBE)
			μPD780102	16			768														1		–
			μPD780103	24
			μPD78F0103		Flash
		78K0/KC1	μPD780111	8	Mask	–	512	12	240 k	√	32	–/–	1	4	–	1	1	16-bit x 1, 8-bit x 4	–	1	1	–	–	–	–	–	–	–	–	–	8	–	–	–	POC, LVI, CLM	2.5 to 5.5	44-LQFP (10 x 10)
			μPD780112	16
			μPD780113	24			1024
			μPD780114	32
			μPD78F0114		Flash
		78K0/KD1	μPD780121	8	Mask	–	512	12	240 k	√	39	–/–	1	4	–	1	1	16-bit x 1, 8-bit x 4	–	1	1	–	–	–	–	–	–	–	–	–	8	–	–	–	POC, LVI, CLM	2.5 to 5.5	52-LQFP (10 x 10)
			μPD780122	16
			μPD780123	24			1024
			μPD780124	32
			μPD78F0124		Flash
		78K0/KE1	μPD780131	8	Mask	–	512	12	240 k	√	51	–/–	1	4	–	1	1	16-bit x 1, 8-bit x 4	–	1	1	–	–	–	–	–	–	–	–	–	8	–	–	16 x 16 32 ÷ 16	POC, LVI, CLM	2.5 to 5.5	64-LQFP (10 x 10) 64-LQFP (12 x 12) 64-LQFP (14 x 14)
			μPD780132	16
			μPD780133	24			1024						2					16-bit x 2, 8-bit x 4					1
			μPD780134	32
			μPD78F0134		Flash
			μPD780136	48	Mask		2048																												POC, LVI, CLM, ROMC
			μPD780138	60
			μPD78F0138		Flash
		78K0/KF1	μPD780143	24	Mask	–	1024	12	240 k	√	67	8/16	1	4	–	1	1	16-bit x 1, 8-bit x 4	–	1	1	–	–	–	1	–	–	–	–	–	8	–	–	16 x 16 32 ÷ 16	POC, LVI, CLM	2.5 to 5.5	80-TQFP (12 x 12) 80-QFP (14 x 14)
			μPD780144	32
			μPD780146	48			2048						2					16-bit x 2, 8-bit x 4					1
			μPD780148	60
			μPD78F0148		Flash
		78K0/KB1+	μPD78F0101H	8	Flash	√	512	16	240 k	–	22	–/–	1	3	–	–	1	16-bit x 1, 8-bit x 3	–	1	–	–	1	–	–	–	–	–	–	–	4	–	–	–	POC (2.1 V ± 0.1 V), LVI, CLM	2.0 to 5.5	30-SSOP (7.62)	QB-78K0MINI (MINICUBE) QB-78K0KX1H (IECUBE)
			μPD78F0102H	16			768														1		–
			μPD78F0103H	24
		78K0/KC1+	μPD78F0112H	16	Flash	√	512	16	240 k	√	32	–/–	1	4	–	1	1	16-bit x 1, 8-bit x 4	–	1	1	–	–	–	–	–	–	–	–	–	8	–	–	–	POC (2.1 V ± 0.1 V), LVI, CLM	2.0 to 5.5	44-LQFP (10 x 10)
			μPD78F0113H	24			1024
			μPD78F0114H	32
			μPD78F0114HD																										√
		78K0/KD1+	μPD78F0122H	16	Flash	√	512	16	240 k	√	39	–/–	1	4	–	1	1	16-bit x 1, 8-bit x 4	–	1	1	–	–	–	–	–	–	–	–	–	8	–	–	–	POC (2.1 V ± 0.1 V), LVI, CLM	2.0 to 5.5	52-LQFP (10 x 10)
			μPD78F0123H	24			1024
			μPD78F0124H	32
			μPD78F0124HD																										√
		78K0/KE1+	μPD78F0132H	16	Flash	√	512	16	240 k	√	51	–/–	1	4	–	1	1	16-bit x 1, 8-bit x 4	–	1	1	–	–	–	–	–	–	–	–	–	8	–	–	16 x 16 32 ÷ 16	POC (2.1 V ± 0.1 V), LVI, CLM	2.0 to 5.5	64-LQFP (10 x 10) 64-LQFP (12 x 12) 64-LQFP (14 x 14) 64-FBGA (6 x 6)
			μPD78F0133H	24			1024						2					16-bit x 2, 8-bit x 4					1
			μPD78F0134H	32
			μPD78F0136H	48			2048																												POC (2.1 V ± 0.1 V), LVI, CLM, ROMC
			μPD78F0138H	60
			μPD78F0138HD																										√
		78K0/KF1+	μPD78F0148H	60	Flash	√	2048	16	240 k	√	67	8/16	2	4	–	1	1	16-bit x 2, 8-bit x 4	–	1	1	–	1	–	1	–	–	–	–	–	8	–	–	16 x 16 32 ÷ 16	POC (2.1 V ± 0.1 V), LVI, CLM	2.0 to 5.5	80-TQFP (12 x 12) 80-QFP (14 x 14)
			μPD78F0148HD																										√
General Purpose	78K0S	μPD789026	μPD789022	4	Mask	–	256	5	–	–	34	–/–	1	1	–	–	1	–	–	–	1	–	–	–	–	–	–	–	–	–	–	–	–	–	–	1.8 to 5.5	44-LQFP (10 x 10)	IE-78K0S-NS/-A, IE-789026-NS-EM1
			μPD789024	8
			μPD789025	12			512
			μPD789026	16
			μPD78F9026A		Flash
		μPD789046	μPD789046	16	Mask	–	512	5	–	√	34	–/–	1	1	–	1	1	8-bit x 1	–	–	1	–	–	–	–	–	–	–	–	–	–	–	–	–	–	1.8 to 5.5	44-LQFP (10 x 10)	IE-78K0S-NS/-A, IE-789046-NS-EM1
			μPD78F9046		Flash
		μPD789052	μPD789052	4	Mask	–	128	5	–	–	14	–/–	–	2	–	–	1	8-bit x 1	–	–	–	–	–	–	–	–	–	–	–	–	–	–	–	–	BSB	1.8 to 5.5	20-SSOP (7.62)	IE-78K0S-NS/-A, IE-789860-NS-EM1
			μPD78E9860A		EEP ROM																														POC, BSB, EEPROM: 32 bytes
		μPD789062	μPD789062		Mask			1 (RC)																											BSB	1.8 to 3.6
			μPD78E9861A		EEP ROM																														POC, BSB, EEPROM: 32 bytes
		μPD789074	μPD789071	2	Mask	–	256	10	–	–	24	–/–	–	2	–	–	1	8-bit x 1	–	–	1	–	–	–	–	–	–	–	–	–	–	–	–	–	–	1.8 to 5.5	30-SSOP (7.62)	IE-78K0S-NS/-A, IE-789046-NS-EM1 + NP-K907
			μPD789072	4
			μPD789074	8
			μPD78F9076	16	Flash
		μPD789088	μPD789086	16	Mask	–	384	5	–	–	24	–/–	1	3	–	–	1	8-bit x 1	–	–	1	–	–	–	–	–	–	–	–	–	–	–	–	–	POC, LVI	1.8 to 5.5	30-SSOP (7.62)	IE-78K0S-NS/-A, IE-789088-NS-EM1
			μPD789088	32			576
			μPD78F9088		Flash
		μPD789104A	μPD789101A	2	Mask	–	256	10	–	–	20	–/–	1	1	–	–	1	8-bit x 1	–	–	1	–	–	–	–	–	–	–	–	–	–	4	–	8 x 8	–	1.8 to 5.5	30-SSOP (7.62)	IE-78K0S-NS/-A, IE-789136-NS-EM1
			μPD789102A	4
			μPD789104A	8
		μPD789114A	μPD789111A	2																											4	–
			μPD789112A	4
			μPD789114A	8
			μPD78F9116A/B	16	Flash
		μPD789124A	μPD789121A	2	Mask			4 (RC)																						–	4
			μPD789122A	4
			μPD789124A	8
		μPD789134A	μPD789131A	2																											4	–
			μPD789132A	4
			μPD789134A	8
			μPD78F9136A/B	16	Flash
		μPD789167	μPD789166(Y)	16	Mask	–	512	10	–	√	31	–/–	1	3	–	1	1	8-bit x 3	–	–	1	–	–	–	–	0 (1)	–	–	–	–	–	8	–	8 x 8	–	1.8 to 5.5	44-LQFP (10 x 10) 48-TQFP (7 x 7)	IE-78K0S-NS/-A, IE-789177-NS-EM1
			μPD789167(Y)	24
		μPD789177	μPD789176(Y)	16																											8	–
			μPD789177(Y)	24
			μPD78F9177A(Y)		Flash
General Purpose	78K0	μPD780024A	μPD780021A(Y)	8	Mask	–	512	12 (8.38)	–	√	51	8/16	1	2	–	1	1	16-bit x 1, 8-bit x 2	1	–	–	–	2 (1)	–	–	0 (1)	–	–	–	–	–	4	–	–	–	1.8 to 5.5	64-LQFP (10 x 10) 64-TQFP (12 x 12) 64-LQFP 64-QFP (14 x 14) 64-SDIP (19.05) 73-FBGA (9 x 9)	IE-78K0-NS/-A, IE-780034-NS-EM1
			μPD780022A(Y)	16
			μPD780023A(Y)	24			1024
			μPD780024A(Y)	32
		μPD780034A	μPD780031A(Y)	8			512																								4	–
			μPD780032A(Y)	16
			μPD780033A(Y)	24			1024
			μPD780034A(Y)	32
			μPD78F0034A/B(/Y)		Flash
		μPD780024AS	μPD780021AS	8	Mask		512	12			39	–/–											2			–					–	4					52-LQFP (10 x 10)
			μPD780022AS	16
			μPD780023AS	24			1024
			μPD780024AS	32
		μPD780034AS	μPD780031AS	8			512																								4	–
			μPD780032AS	16
			μPD780033AS	24			1024
			μPD780034AS	32
			μPD78F0034BS		Flash
		μPD780058	μPD780053(Y)	24	Mask	–	1024	5	–	√	68	8/16	1	2	–	1	1	14-bit x 1	–	–	1	–	1 (0)	0 (1)	1	–	–	–	–	–	–	8	2	–	–	1.8 to 5.5	80-TQFP (12 x 12) 80-QFP (14 x 14)	IE-78K0-NS/-A, IE-780308-NS-EM1
			μPD780054(Y)	32
			μPD780055(Y)	40
			μPD780056(Y)	48
			μPD780058B(Y)	60			2048																												ROMC
			μPD78F0058(Y)		Flash																															2.2 to 5.5
		μPD780065	μPD780065	40	Mask	–	5120	8.38	–	√	60	8/16	1	2	–	1	1	16-bit x 1, 8-bit x 2	1	–	–	–	2	–	1	–	–	–	–	–	–	8	–	–	–	2.7 to 5.5	80-QFP (14 x 14)	IE-78K0-NS/-A, IE-780066-NS-EM4 + IE-78K0-NS-P01
			μPD78F0066	48	Flash
		μPD780078	μPD780076(Y)	48	Mask	–	2048	12 (8.38)	–	√	52	8/16	2	2	–	1	1	16-bit x 2, 8-bit x 2	1	–	1	–	1	–	–	0 (1)	–	–	–	–	8	–	–	–	–	1.8 to 5.5	64-TQFP (12 x 12) 64-LQFP 64-QFP (14 x 14)	IE-78K0-NS/-A, IE-780078-NS-EM1
			μPD780078(Y)	60
			μPD78F0078(Y)		Flash
		μPD780862	μPD780861	8	Mask	–	512	10	8 M, 240 k	–	14	–/–	1	3	–	–	1	16-bit x 1, 8-bit x 2	–	1	–	–	1	–	–	–	–	–	–	–	4	–	–	–	POC, LVI, CLM, Manchester code generator	2.7 to 5.5	20-SSOP (7.62)	IE-78K0-NS/-A, IE-780862-NS-EM1
			μPD780862	16			768
			μPD78F0862A		Flash	√
LCD ALL Flash	78K0	78K0/LE2	μPD78F0361	16	Flash	√	768	20	8 M, 240 k	√	24	–/–	1	4	–	1	1	16-bit x 1, 8-bit x 4	–	1	1	–	–	–	–	1	–	–	–	20 x 4	5	–	–	–	POC, LVI	1.8 to 5.5	64-LQFP (10 x 10) 64-LQFP * (12 x 12)	QB-MINI2 (MINICUBE2) QB-78K0LX2 (IECUBE)
			μPD78F0362	24			1024
			μPD78F0363	32
			μPD78F0363D																										√
		78K0/LF2	μPD78F0372	24	Flash	√	1024	20	8 M, 240 k	√	34	–/–	1	4	–	1	1	16-bit x 1, 8-bit x 4	–	1	1	–	–	–	–	1	–	–	–	26 x 4	8	–	–	–	POC, LVI	1.8 to 5.5	80-LQFP (12 x 12) 80-LQFP (14 x 14)
			μPD78F0373	32
			μPD78F0374	48			2048						2					16-bit x 2, 8-bit x 4																16 x 16 32 ÷ 16
			μPD78F0375	60			3072
			μPD78F0376	96			5120
			μPD78F0376D																										√
			μPD78F0382	24			1024				26		1					16-bit x 1, 8-bit x 4											–	34 x 4	–			–
			μPD78F0383	32
			μPD78F0384	48			2048						2					16-bit x 2, 8-bit x 4																16 x 16 32 ÷ 16
			μPD78F0385	60			3072
			μPD78F0386	96			5120
			μPD78F0386D																										√
		78K0/LG2	μPD78F0393	32	Flash	√	1024	20	8 M, 240 k	√	40	–/–	1	4	–	1	1	16-bit x 1, 8-bit x 4	–	1	1	–	–	–	–	1	–	–	–	40 x 4	8	–	–	–	POC, LVI	1.8 to 5.5	100-LQFP (14 x 14) 100-QFP * (14 x 20)
			μPD78F0394	48			2048						2					16-bit x 2, 8-bit x 4					1											16 x 16 32 ÷ 16
			μPD78F0395	60			3072
			μPD78F0396	96			5120
			μPD78F0397	128			7168
			μPD78F0397D																										√
LCD	78K0S	μPD789306	μPD789304	8	Mask	–	512	5	–	√	23	–/–	1	2	–	1	1	8-bit x 1	–	–	1	–	1	–	–	–	–	–	–	24 x 4	–	–	–	–	–	1.8 to 5.5	64-TQFP (12 x 12) 64-LQFP 64-QFP (14 x 14)	IE-78K0S-NS/-A, IE-789306-NS-EM1
			μPD789306	16
			μPD78F9306		Flash
		μPD789316	μPD789314	8	Mask			4 (RC)
			μPD789316	16
			μPD78F9316		Flash
		μPD789327	μPD789322	4	Mask	–	256	5	–	√	21	–/–	–	2	–	1	1	8-bit x 1	–	–	–	–	1	–	–	–	–	–	–	24 x 4	–	–	–	–	POC	1.8 to 5.5	52-LQFP (10 x 10)	IE-78K0S-NS/-A, IE-789468-NS-EM1
			μPD789324	8
			μPD789326	16			512
			μPD789327	24
			μPD78F9328	32	Flash
		μPD789407A	μPD789405A	12	Mask	–	512	5	–	√	43	–/–	1	3	–	1	1	–	–	–	1	–	–	–	–	–	–	–	–	28 x 4	–	7	–	–	–	1.8 to 5.5	80-TQFP (12 x 12) 80-QFP (14 x 14)	IE-78K0S-NS/-A, IE-789418-NS-EM1
			μPD789406A	16
			μPD789407A	24
		μPD789417A	μPD789415A	12																											7	–
			μPD789416A	16
			μPD789417A	24
			μPD78F9418A	32	Flash
		μPD789426	μPD789425	12	Mask	–	512	5	–	√	40	–/–	1	2	–	1	1	8-bit x 2	–	–	1	–	–	–	–	–	–	–	–	5 x 4	–	6	–	–	–	1.8 to 5.5	64-TQFP (12 x 12) 64-LQFP (14 x 14)	IE-78K0S-NS/-A, IE-789456-NS-EM1
			μPD789426	16
		μPD789436	μPD789435	12																											6	–
			μPD789436	16
			μPD78F9436		Flash
		μPD789446	μPD789445	12	Mask						30																			15 x 4	–	6
			μPD789446	16
		μPD789456	μPD789455	12																											6	–
			μPD789456	16
			μPD78F9456		Flash
		μPD789467	μPD789462	4	Mask	–	256	5	–	√	18	–/–	–	2	–	1	1	8-bit x 1	–	–	–	–	–	–	–	–	–	–	–	23 x 4	–	1	–	–	POC	1.8 to 5.5	52-LQFP (10 x 10)	IE-78K0S-NS/-A, IE-789468-NS-EM1
			μPD789464	8
			μPD789466	16			512
			μPD789467	24
			μPD78F9468	32	Flash
		μPD789479	μPD789477	24	Mask	–	768	5	–	√	45	–/–	1	3	–	1	1	8-bit x 3	–	–	1	–	–	–	1	–	–	–	–	28 x 4	–	8	–	8 x 8	Remote controller receiver	1.8 to 5.5	80-QFP (14 x 14)	IE-78K0S-NS/-A, IE-789488-NS-EM1
			μPD789478	32			1024
			μPD78F9478		Flash
			μPD789479	48	Mask		1536																														80-TQFP (12 x 12)
			μPD78F9479		Flash
		μPD789489	μPD789488	32	Mask		1024																								8	–			On-chip voltage booster for LCD		80-QFP (14 x 14)
			μPD78F9488		Flash
			μPD789489	48	Mask		1536																												On-chip voltage booster for LCD, remote controller receiver
			μPD78F9489		Flash
		μPD789830	μPD789830	24	Mask	–	1024	3.58	–	√	30	–/–	1	1	–	1	1	–	1	–	–	–	–	–	–	–	–	–	–	40 x 16	–	–	–	–	–	2.7 to 5.5	88-pin bare-chip	IE-78K0S-NS/-A, IE-789831-NS-EM1
			μPD78F9831	48	Flash		2048				38																		√								100-LQFP (14 x 14)
		μPD789835B	μPD789832B	24	Mask	–	2240	5	–	√	37	–/–	–	6	–	1	1	8-bit x 1	–	–	1	–	–	–	–	–	–	–	–	48 x 48	–	3	–	8 x 8	SWAP, sound generator	1.8 to 3.6	144-LQFP (20 x 20)	IE-78K0S-NS/-A, IE-789835-NS-EM1
			μPD789833B	32
			μPD789834B	48			3264
			μPD789835B	60
			μPD78F9835		Flash																															3.0 to 3.6
LCD	78K0	μPD780308	μPD780306(Y)	48	Mask	–	2048	5	–	√	57	–/–	1	2	–	1	1	14-bit x 1	–	–	1	–	2 (1)	0 (1)	–	–	–	–	–	40 x 4	–	8	–	–	–	2.0 to 5.5	100-LQFP (14 x 14) 100-QFP (14 x 20)	IE-78K0-NS/-A, IE-780308-NS-EM1
			μPD780308(Y)	60
			μPD78P0308(Y)		OTP ROM																																100-WQFN (14 x 20)
		μPD780318	μPD780316	48	Mask	–	2560	10	–	√	70	–/–	2	3	–	–	1	16-bit x 1, 8-bit x 3	–	–	1	–	1	–	–	–	–	–	–	24 x 4	10	–	1	–	ROMC	1.8 to 5.5	120-TQFP (14 x 14)	IE-78K0-NS/-A, IE-780338-NS-EM1
			μPD780318	60
		μPD780328	μPD780326	48							62																		32 x 4
			μPD780328	60
		μPD780338	μPD780336	48							54																		40 x 4
			μPD780338	60
			μPD78F0338		Flash						70
		μPD780344	μPD780343(Y)	24	Mask	–	1024	10	–	√	66	–/–	1	4	–	1	1	16-bit x 1, 8-bit x 3	1	–	–	–	2	–	–	0 (1)	–	–	–	40 x 4	–	8	–	–	ROMC	1.8 to 5.5	100-LQFP (14 x 14) 113-FBGA (10 x 10)	IE-78K0-NS/-A, IE-780354-NS-EM1
			μPD780344(Y)	32
		μPD780354	μPD780353(Y)	48																											8	–
			μPD780354(Y)	60
			μPD78F0354(Y)		Flash		1536
Inverter Control	78K0S	μPD789842	μPD789841	8	Mask	–	256	8.38	–	–	30	–/–	–	3	10-bit x 1	1	1	6-phase 10-bit x 1	1	–	–	–	–	–	–	–	–	–	–	–	–	8	–	10 x 10	SWAP	4.0 to 5.5	44-LQFP 44-QFP (10 x 10)	IE-78K0S-NS/-A, IE-789842-NS-EM1
			μPD789842	16
			μPD78F9842		Flash
Inverter Control	78K0	μPD78F0712	μPD78F0711 *	8	Flash	√	768	20	8M, 240 k	–	15	–/–	1	2	10-bit x 1	–	1	16-bit x 1, 8-bit x 1, 6-phase 10-bit x 1	1	–	–	–	–	–	–	–	–	–	√	–	4	–	–	16 x 16 32 ÷ 16	POC, LVI	4.0 to 5.5	30-SSOP (7.62)	QB-78K0MINI (MINICUBE)
			μPD78F0712 *	16
		μPD78F0714	μPD78F0714	32	Flash	√	1024	20	240 k	–	48	–/–	2	3	10-bit x 1	–	1	16-bit x 2, 8-bit x 3, 6-phase 10-bit x 1	1	–	–	–	1	–	–	–	–	–	√	–	8	–	–	16 x 16 32 ÷ 16	POC, LVI	4.0 to 5.5	64-TQFP (12 x 12)	QB-780714 (IECUBE)
		μPD780988	μPD780982	16	Mask	–	1024	12	–	–	47	8/8	2	3	10-bit x 1	–	1	16-bit x 2, 8-bit x 3, 6-phase 10-bit x 1	2	–	–	–	1	–	–	–	–	–	–	–	8	–	–	–	–	3.0 to 5.5	64-LQFP 64-QFP (14 x 14) 64-SDIP (19.05)	IE-78K0-NS/-A, IE-780988-NS-EM4 + IE-78K0-NS-P01
			μPD780983	24
			μPD780984	32
			μPD780986	48			2048
			μPD780988	60
			μPD78F0988A		Flash
PC (USB)	78K0S	μPD789800	μPD789800	8	Mask	–	256	6	–	–	31	–/–	–	2	–	–	1	–	–	–	–	–	1	–	–	–	–	–	–	–	–	–	–	–	USB	4.0 to 5.5	44-LQFP (10 x 10)	IE-78K0S-NS/-A, IE-789801-NS-EM1
			μPD78F9801	16	Flash
PC (USB)	78K0	μPD78F0731	μPD78F0730 *	16	Flash	√	3072	16	16M, 6 M, 240 k	–	20	–/–	1	3	–	–	1	8-bit x 4	1	–	–	–	1	–	–	–	–	–	√	–	–	–	–	–	USB, POC, LVI	4.0 to 5.5	30-SSOP (7.62)	QB-78K0MINI (MINICUBE) QB-780731 (IECUBE)
			μPD78F0731 *																																Data flash: 256 KB
VFD	78K0S	μPD789871	μPD789870	4	Mask	–	512	5	–	√	33	–/–	–	3	–	1	1	–	–	–	–	–	1	–	–	–	–	–	–	–	–	–	–	–	VFD output: 25	2.7 to 5.5	52-LQFP (10 x 10)	IE-78K0S-NS/-A, IE-789872-NS-EM1
			μPD789871	8
			μPD78F9872	16	Flash
VFD	78K0	μPD780208	μPD780204A	32	Mask	–	1024	5	–	√	74	–/–	1	2	–	1	1	14-bit x 1	–	–	–	–	1	–	1	–	–	–	–	–	–	8	–	–	VFD output: 53	2.7 to 5.5	100-QFP (14 x 20)	IE-78K0-NS/-A, IE-780208-NS-EM1
			μPD780205A	40
			μPD780206	48			2048
			μPD780208	60
			μPD78P0208		OTP ROM
		μPD780232	μPD780232	16	Mask	–	768	5	–	–	40	–/–	–	3	–	–	1	–	–	–	–	–	1	–	1	–	–	–	–	–	–	4	–	–	VFD output: 53	2.7 to 5.5	80-QFP (14 x 14)	IE-78K0-NS/-A, IE-780233-NS-EM4 + IE-78K0-NS-P01
			μPD78F0233	24	Flash
Meter Control	78K0S	μPD789881	μPD789881	16	Mask	–	512	–	500 k	√	28	–/–	1	3	–	–	1	8-bit x 2	1	–	–	–	–	–	–	–	–	–	–	26 x 4	–	–	–	8 x 8	Low power consumption	2.7 to 3.6	80-QFP (14 x 14)	IE-78K0S-NS/-A, IE-789882-NS-EM1
			μPD78F9882	32	Flash																														3.0 to 3.6
Meter Control	78K0	μPD780958	μPD780957(A)	48	Mask	–	2048	1.2 (RC)	–	√	69	–/–	2	4	–	–	1	16-bit x 1	1	–	–	–	1	–	–	–	–	–	–	30 x 3	–	–	–	–	Subclock2 (4.91 MHz), sampling pulse, MR sampling	2.2 to 3.5	100-LQFP (14 x 14)	IE-78K0-NS/-A, IE-780958-NS-EM4 + IE-78K0-NS-P02
			μPD780958(A)	60
Car Electronics Keyless Entry	78K0S	μPD789860	μPD789860	4	Mask	–	128	5	–	–	14	–/–	–	2	–	–	1	8-bit x 1	–	–	–	–	–	–	–	–	–	–	–	–	–	–	–	–	BSB, POC, LVI, EEPROM: 32 bytes	1.8 to 5.5	20-SSOP (7.62)	IE-78K0S-NS/-A, IE-789860-NS-EM1
			μPD78E9860A		EEP ROM
		μPD789861	μPD789861		Mask			1 (RC)																											1.8 to 3.6
			μPD78E9861A		EEP ROM
		μPD789862	μPD789862	16	Mask	–	512	5	–	–	22	–/–	2	1	–	–	1	8-bit x 1	–	–	1	–	–	–	–	–	–	–	–	–	–	–	–	–	BSB, POC, LVI, EEPROM: 256 bytes	1.8 to 5.5	30-SSOP (7.62)	IE-78K0S-NS/-A, IE-789862-NS-EM1
Car Electronics Sensor	78K0S	μPD789863	μPD789863	4	Mask	–	256	1.8 (RC)	–	–	5	–/–	–	–	12-bit x 1, wake timer (8-bit x 1)	–	1	–	–	–	–	–	–	–	–	–	–	–	–	–	2	–	–	10 x 10	LF wave detector, sensor amplifier circuit, battery voltage detector, temperature sensor circuit, EEPROM: 64 bytes	1.9 to 3.6	20-SSOP (7.62)	IE-78K0S-NS/-A, IE-789864-NS-EM1
			μPD78E9863		EEP ROM
		μPD789864	μPD789864		Mask			2
			μPD78E9864		EEP ROM
Car Electronics ALL Flash	78K0	78K0/FC2	μPD78F0881 *	32	Flash	√	2048	20	8 M, 240 k	√	37	–/–	2	4	–	1	1	16-bit x 2, 8-bit x 4	–	1	–	1	–	–	–	–	–	1	√	–	8	–	–	16 x 16 32 ÷ 16	POC, LVI	1.8 to 5.5	44-LQFP (10 x 10)	QB-MINI2 (MINICUBE2) QB-78K0FX2 (IECUBE)
			μPD78F0882 *	48			3072
			μPD78F0883 *	60
			μPD78F0884 *	32			2048				41																										48-LQFP (7 x 7)
			μPD78F0885 *	48			3072
			μPD78F0886 *	60
		78K0/FE2	μPD78F0887 *	48	Flash	√	3072	20	8 M, 240 k	√	55	–/–	4	4	–	1	1	16-bit x 4, 8-bit x 4	–	1	–	1	1	–	–	–	–	1	√	–	12	–	–	16 x 16 32 ÷ 16	POC, LVI	1.8 to 5.5	64-LQFP (10 x 10) 64-LQFP (12 x 12)
			μPD78F0888 *	60
			μPD78F0889 *	96			5120
			μPD78F0890 *	128			7168
		78K0/FF2	μPD78F0891 *	60	Flash	√	3072	20	8 M, 240 k	√	71	–/–	4	4	–	1	1	16-bit x 4, 8-bit x 4	–	1	–	1	1	–	–	–	–	1	√	–	16	–	–	16 x 16 32 ÷ 16	POC, LVI	1.8 to 5.5	80-LQFP (12 x 12) 80-LQFP (14 x 14)
			μPD78F0892 *	96			5120
			μPD78F0893 *	128			7168
Car Electronics Body Control (CAN Controller)	78K0S	μPD789850A	μPD789850A	16	Mask	–	768	8	–	40 kHz	18	–/–	1	1	–	–	1	8-bit x 1	–	–	1	–	–	–	–	–	–	1	–	–	–	4	–	8 x 8	–	4.0 to 5.5	30-SSOP (7.62)	IE-78K0S-NS/-A, IE-789850-NS-EM1
			μPD78F9850A		Flash
		μPD789852	μPD789851	24	Mask	–	1312	8	–	40 kHz	31	–/–	1	3	–	–	1	8-bit x 3	2	–	–	–	1	–	–	–	–	1	–	–	8	–	–	8 x 8	–	4.0 to 5.5	44-LQFP (10 x 10)	IE-78K0S-NS/-A, IE-789852-NS-EM1
			μPD789852	32
			μPD78F9852		Flash
Car Electronics Body Control (CAN Controller)	78K0	μPD780703AY	μPD780703AY	59.5	Mask	–	3360	8	–	–	67	–/–	2	3	–	1	1	16-bit x 2, 8-bit x 3	1	–	–	–	2	–	–	1	–	1	–	–	–	16	–	–	–	3.5 to 5.5	80-QFP (14 x 14)	IE-78K0-NS/-A, IE-780701-NS-EM1
			μPD78F0703AY		Flash
		μPD780818A	μPD780814A	32	Mask	–	1504	8.38	–	√	46	–/–	2	2	–	1	1	16-bit x 1, 8-bit x 2	1	–	–	–	2	–	–	–	–	1	–	–	–	12	–	–	–	4.0 to 5.5	64-TQFP (12 x 12)	IE-78K0-NS/-A, IE-780818-NS-EM4 + IE-78K0-NS-P04
			μPD780816A	48
			μPD78F0818A	59.5	Flash		3040
Car Electronics Body Control (LIN Transceiver)	78K0	μPD788002	μPD788001A *	16	Mask	–	768	12	240 k	–	21	–/–	1	3	–	–	1	16-bit x 1, 8-bit x 3	–	1	1	–	–	–	–	–	–	–	–	–	3	–	–	–	POC, LVI, CLM, voltage regulator, LIN transceiver	6 to 18	38-SSOP (7.62)	QB-78K0KX1H (IECUBE) + QB-788002-EA-01T
			μPD788002A *	24
			μPD78F8002A *		Flash
		μPD788006	μPD788004A *	16	Mask	–	512	12	240 k	√	31	–/–	1	4	–	1	1	16-bit x 1, 8-bit x 4	–	1	1	–	–	–	–	–	–	–	–	–	7	–	–	–	POC, LVI, CLM, voltage regulator, LIN transceiver	6 to 18	52-LQFP (10 x 10)	QB-78K0KX1H (IECUBE) + QB-788006-EA-01T
			μPD788005A *	24
			μPD788006A *	32			1024
		μPD78F8006H	μPD78F8004H *	16	Flash	√	512	16	240 k	√	31	–/–	1	4	–	1	1	16-bit x 1, 8-bit x 4	–	1	1	–	–	–	–	–	–	–	–	–	7	–	–	–	POC, LVI, CLM, voltage regulator, LIN transceiver	6 to 18	52-LQFP (10 x 10)
			μPD78F8005H *	24
			μPD78F8006H *	32			1024
Car Electronics Dashboard Control	78K0	μPD780822B	μPD780821B	90	Mask	–	5120	16	240 k	√	76	–/–	4	2	–	1	1	16-bit x 3, 8-bit x 2	–	1	–	–	2	–	–	–	–	1	–	34 x 4	8	–	–	–	CLM, sound generator, meter controller/driver	4.0 to 5.5	100-LQFP (14 x 14) 100-QFP (14 x 20)	QB-780822 (IECUBE)
			μPD780822B	120
			μPD78F0822B		Flash
		μPD780828A	μPD780824A	32	Mask	–	1504	8.38	–	–	59	–/–	1	3	–	1	1	8-bit x 2	1	–	–	–	2	–	–	–	–	1	–	28 x 4	–	5	–	–	Sound generator, meter controller/driver	4.0 to 5.5	80-QFP (14 x 14)	IE-78K0-NS/-A, IE-780828-NS-EM4 + IE-78K0-NS-P04
			μPD780826A	48
			μPD780828A	60			3040
			μPD78F0828A	59.5	Flash
		μPD780852	μPD780851(A)	32	Mask	–	1536	8.38	–	–	56	–/–	1	3	–	1	1	8-bit x 2	1	–	–	–	2	–	–	–	–	–	–	20 x 4	–	5	–	–	Sound generator, meter controller/driver	4.0 to 5.5	80-QFP (14 x 14)	IE-78K0-NS/-A, IE-780852-NS-EM4 + IE-78K0-NS-P04
			μPD780852(A)	40
			μPD78F0852		Flash

*: Under development

Remark
POC: Power-on-clear circuit
LVI: Low voltage detection circuit
CLM: Clock monitor
ROMC: ROM correction
BSB: Bit sequential buffer
SWAP: Swapping
VFD: Vacuum Fluorescent Display

February 2007

Empower your creativity

78K Embedded Controller

Empowered by Innovation

16-bit Single-chip Microcontrollers 78K0R MICROCONTROLLERS

Device				Memory				Clock			I/O	Bus	Timer				Serial Interface						OCD	Peripheral Functions				Others		
Applications	CPU core	Commercial name	Product name	ROM size [K bytes]	ROM type	Single Voltage Flash	RAM size [bytes]	Maximum operating frequency [MHz]	Internal oscillator [Hz]	Subclock (32.768 kHz)	I/O port	External bus data/address	16-bit timer	Real-time counter	Watchdog timer	PWM output	CSI/UART	CSI: 2 ch/UART: 1 ch	CSI/UART/ simplified I²C	CSI: 2 ch/UART: 1 ch/ simplified I²C: 2 ch	UART (supporting LIN)	I²C	On-chip debug	10-bit A/D converter	8-bit D/A converter	Multiplier/divider [bit x bit, bit ÷ bit]	Other functions	Power supply voltage [V]	Package (size [mm])	In-circuit emulator, Emulation board
General Purpose (ALL Flash)	78K0R	78K0R/KE3	μPD78F1142	64	Flash	√	4	20	8 M, 240 k	√	55	–/–	8	1	1	PWM: 16-bit x 3, Multiple PWM: 16-bit x 6	1	–	1	–	1	1	√	8	–	16 x 16	POC, LVI	1.8 to 5.5	64-LQFP (10 x 10) 64-LQFP (12 x 12)	QB-MINI2 (MINICUBE2) QB-78K0RKX3 (IECUBE)
			μPD78F1143 *	96			6																							
			μPD78F1144 *	128			8																							
			μPD78F1145 *	192			10																							
			μPD78F1146 *	256			12																							
		78K0R/KF3	μPD78F1152 *	64	Flash	√	4	20	8 M, 240 k	√	70	–/–	8	1	1	PWM: 16-bit x 4, Multiple PWM: 16-bit x 7	–	1	2	–	1	1	√	8	2	16 x 16	POC, LVI	1.8 to 5.5	80-LQFP (12 x 12) 80-LQFP (14 x 14)	
			μPD78F1153 *	96			6																							
			μPD78F1154 *	128			8																							
			μPD78F1155 *	192			10																							
			μPD78F1156 *	256			12																							
		78K0R/KG3	μPD78F1162 *	64	Flash	√	4	20	8 M, 240 k	√	88	20/16	8	1	1	PWM: 16-bit x 4, Multiple PWM: 16-bit x 7	–	1	2	–	1	1	√	16	2	16 x 16	POC, LVI	1.8 to 5.5	100-LQFP (14 x 14) 100-LQFP (14 x 20)	
			μPD78F1163 *	96			6																							
			μPD78F1164 *	128			8																							
			μPD78F1165 *	192			10																							
			μPD78F1166 *	256			12																							
			μPD78F1167 *	384			24																							
			μPD78F1168 *	512			30																							
		78K0R/KH3	μPD78F1174 *	128	Flash	√	8	20	8 M, 240 k	√	116	20/16	12	1	1	PWM: 16-bit x 6, Multiple PWM: 16-bit x 7, Multiple PWM: 16-bit x 3	–	1	–	2	1	1	√	16	2	16 x 16	POC, LVI	1.8 to 5.5	128-LQFP (14 x 20)	
			μPD78F1175 *	192			10																							
			μPD78F1176 *	256			12																							
			μPD78F1177 *	384			24																							
			μPD78F1178 *	512			30																							
		78K0R/KJ3	μPD78F1184 *	128	Flash	√	8	20	8 M, 240 k	√	132	20/16	12	1	1	PWM: 16-bit x 6, Multiple PWM: 16-bit x 7, Multiple PWM: 16-bit x 3	–	1	–	2	1	1	√	16	2	16 x 16	POC, LVI	1.8 to 5.5	144-LQFP (20 x 20)	
			μPD78F1185 *	192			10																							
			μPD78F1186 *	256			12																							
			μPD78F1187 *	384			24																							
			μPD78F1188	512			30																							

*: Under development

78K MICROCONTROLLERS DEVELOPMENT TOOL

• HARDWARE DEVELOPMENT ENVIRONMENT

· Functional comparison of each emulator

Item		In-circuit emulator							On-chip emulator	
		QB-78K0RKX3 (IECUBE)	QB-78K0xxx (IECUBE)	IE-78K0-NS	IE-78K0-NS-A	IE-78K0S-NS	IE-78K0S-NS-A	QB-78K0SKX1 (IECUBE)	QB-78K0MINI (MINICUBE)	QB-MINI2 (MINICUBE2)
Maximum operating frequency		Equivalent to target device (Internal/External)						Equivalent to target device (Internal)		
Emulation memory capacity	Internal ROM	512 KB (MAX.)	256 KB (MAX.)	64 KB				Target device's internal flash ROM capacity		
	Internal RAM	61.75 KB (MAX.)	1 KB					Target device's internal RAM capacity		
	Internal expansion RAM	Equivalent to target device	14 KB (MAX.)	Equivalent to target device		No target device			Equivalent to target device	
	External memory	Equivalent to target device				No target device			Equivalent to target device	
Event function	Execution events	8		2	10	2	10	None	1 (0: when using software break)	
	Access events	10	10	4	12	4	12	1[Notes 1, 2]		
Break function	Hardware break	20 to 24	34	6	22	6	22	1	2[Notes 1, 2]	
	Software break	2000		100	100	None	100	2000		
	Forcible break	Enabled								
	Step execution	Enabled								
	Fail-safe break	Enabled								
Trace function	Trace memory capacity	128 K frames		8 K frames				1 K frames	None	
	Trace items	Status, instruction execution, access, timestamp	Status, instruction execution, access		Status, instruction execution, access, timestamp	Status, instruction execution, access	Status, instruction execution, access, timestamp	Instruction branch		
Time measuring function	Program execution (start - end) measuring	Enabled							None	Enabled
	Inter-event measuring	Enabled (2)		None	Enabled (16)	None	Enabled (1)	None		
	Display items of inter-event measuring result	Total value, pass count, maximum value, minimum value, average value			Total value, pass count, average value		Total value, pass count, average value			
	Timeout break	Enabled			Enabled		Enabled			
Real-time RAM monitor function	No. of points	Unrestricted						8[Note 1]		
	Maximum capacity	Internal ROM/internal RAM area (all memory area by break for a moment)		2 KB of internal ROM/internal RAM area without SFR area		Internal RAM area without SFR area		16 bytes[Note 1]		
Coverage function	Memory capacity	Internal ROM space + external memory space		None	Internal ROM space	None	Internal ROM space	None		
	Execution coverage	Enabled			Enabled		Enabled			
	Access coverage	Enabled			Enabled		Enabled			
Maskable pins		TARGET RESET, WAIT, NMI, INTERNAL RESET		RESET				TARGET RESET, INTERNAL RESET		
PC interface		USB2.0, USB1.1		PCI, PCMCIA				USB2.0, USB1.1		

Notes 1. When QB-MINI2 (MINICUBE2) is used for 78K0S microcontroller, this function is not supported.
2. When QB-MINI2 (MINICUBE2) is used for 78K0R microcontroller, one event can be set as either of event after execution or access event.

· System Configuration of an emulator

MINICUBE2

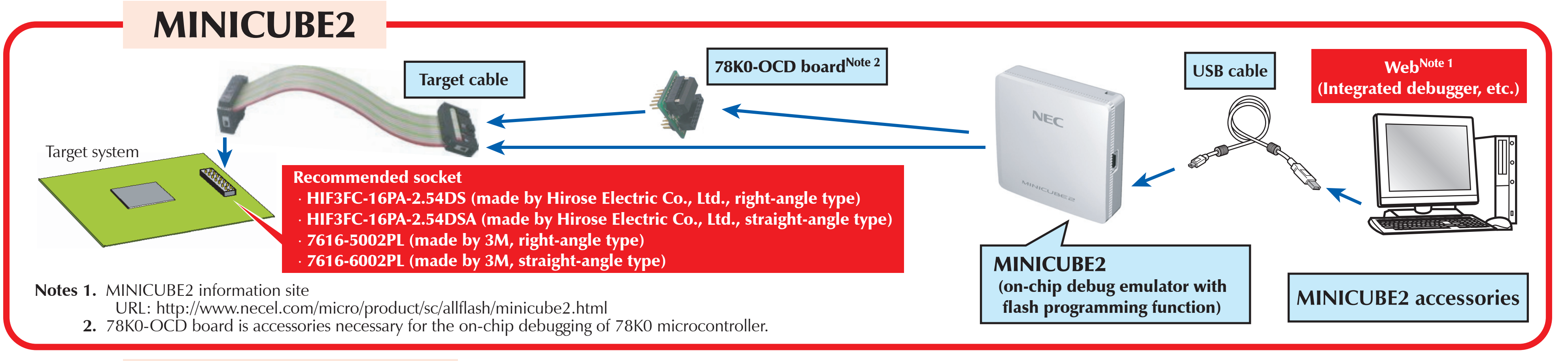
Target cable
78K0-OCD board[Note 2]
USB cable
Web[Note 1] (Integrated debugger, etc.)
Target system
MINICUBE2 (on-chip debug emulator with flash programming function)
MINICUBE2 accessories

Recommended socket
- · HIF3FC-16PA-2.54DS (made by Hirose Electric Co., Ltd., right-angle type)
- · HIF3FC-16PA-2.54DSA (made by Hirose Electric Co., Ltd., straight-angle type)
- · 7616-5002PL (made by 3M, right-angle type)
- · 7616-6002PL (made by 3M, straight-angle type)

Notes 1. MINICUBE2 information site
URL: http://www.necel.com/micro/product/sc/allflash/minicube2.html
2. 78K0-OCD board is accessories necessary for the on-chip debugging of 78K0 microcontroller.

78K0 MINICUBE

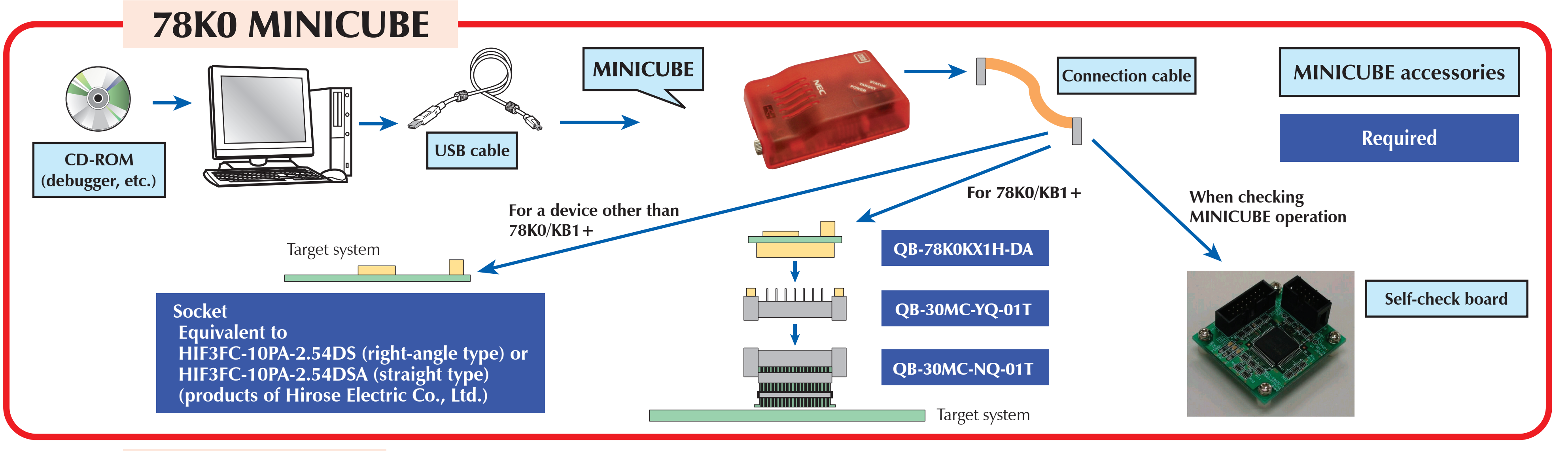

Socket
Equivalent to
HIF3FC-10PA-2.54DS (right-angle type) or
HIF3FC-10PA-2.54DSA (straight type)
(products of Hirose Electric Co., Ltd.)

IECUBE

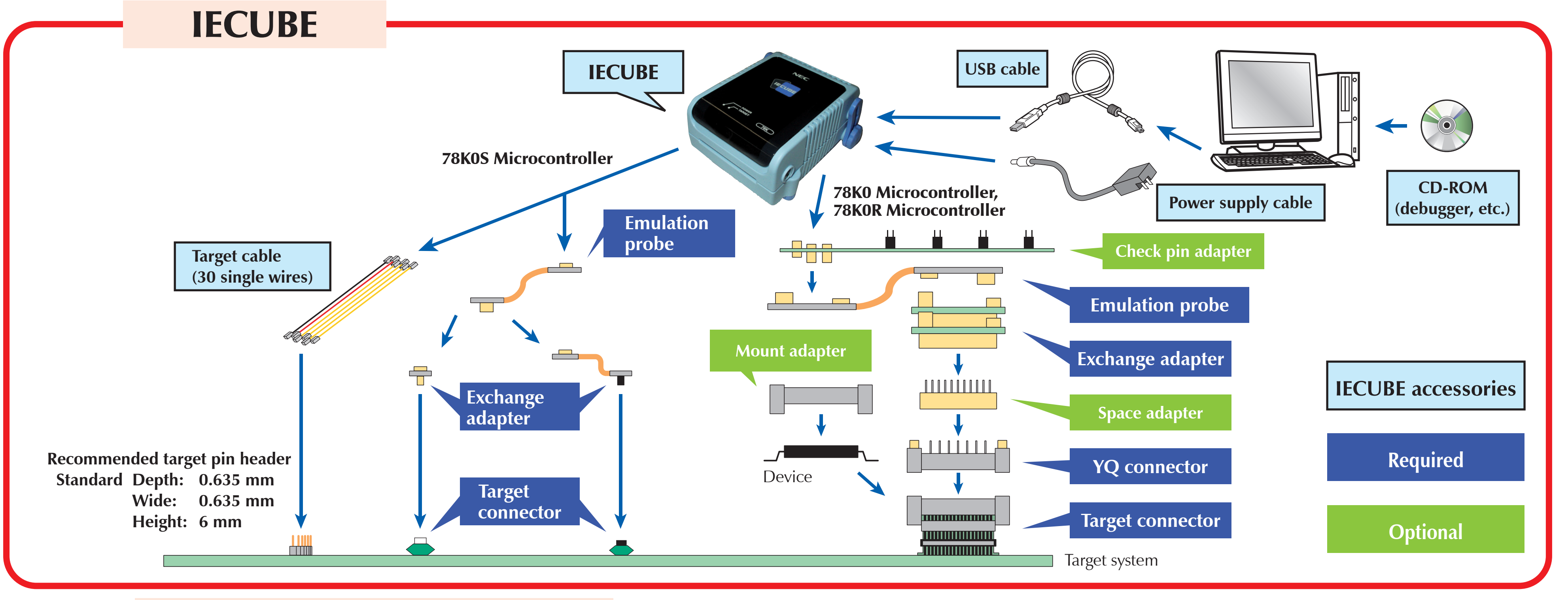

Recommended target pin header
Standard Depth: 0.635 mm
Wide: 0.635 mm
Height: 6 mm

IE-78K0S-NS, IE-78K0-NS

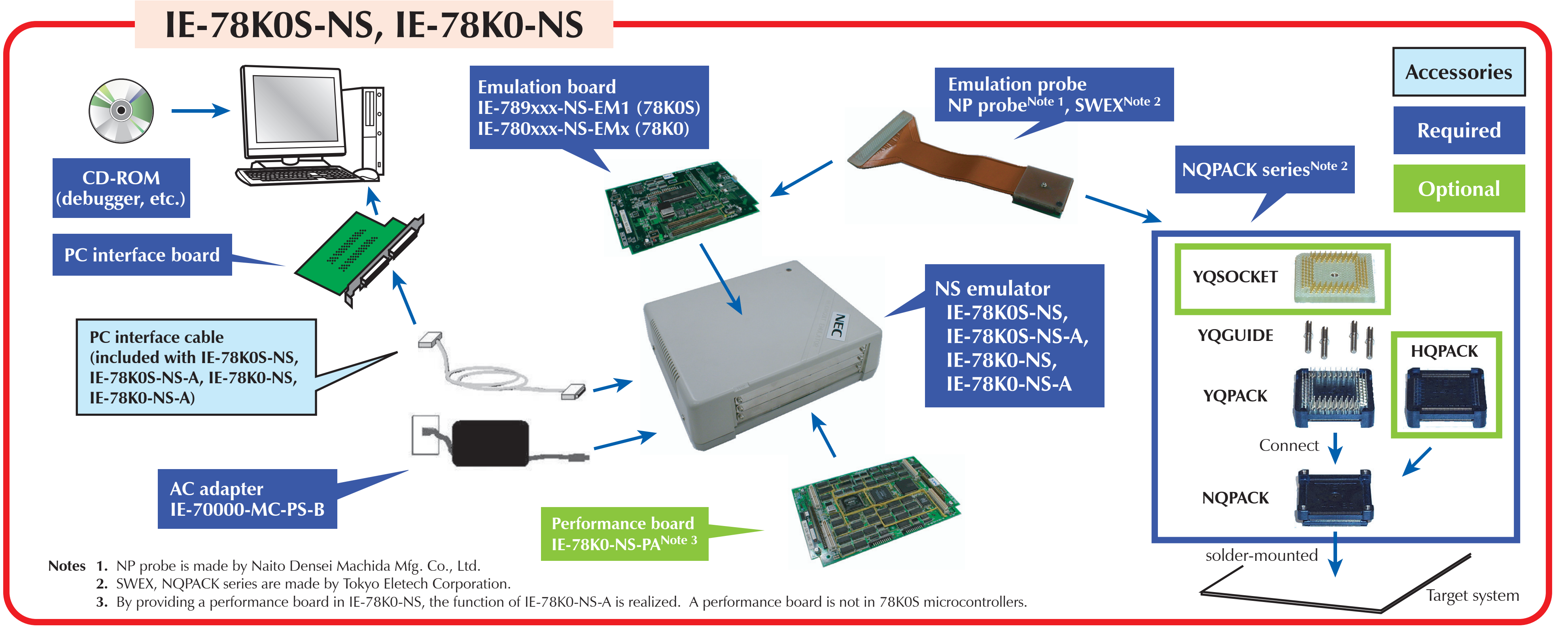
CD-ROM (debugger, etc.)
PC interface board
Emulation board IE-789xxx-NS-EM1 (78K0S) IE-780xxx-NS-EMx (78K0)
Emulation probe NP probe[Note 1], SWEX[Note 2]
NQPACK series[Note 2]
Accessories
Required
Optional
YQSOCKET
YQGUIDE
HQPACK
YQPACK
Connect
NQPACK
solder-mounted
Target system
NS emulator IE-78K0S-NS, IE-78K0S-NS-A, IE-78K0-NS, IE-78K0-NS-A
AC adapter IE-70000-MC-PS-B
Performance board IE-78K0-NS-PA[Note 3]

PC interface cable (included with IE-78K0S-NS, IE-78K0S-NS-A, IE-78K0-NS, IE-78K0-NS-A)

Notes 1. NP probe is made by Naito Densei Machida Mfg. Co., Ltd.
2. SWEX, NQPACK series are made by Tokyo Eletech Corporation.
3. By providing a performance board in IE-78K0-NS, the function of IE-78K0-NS-A is realized. A performance board is not in 78K0S microcontrollers.

• SOFTWARE DEVELOPMENT ENVIRONMENT

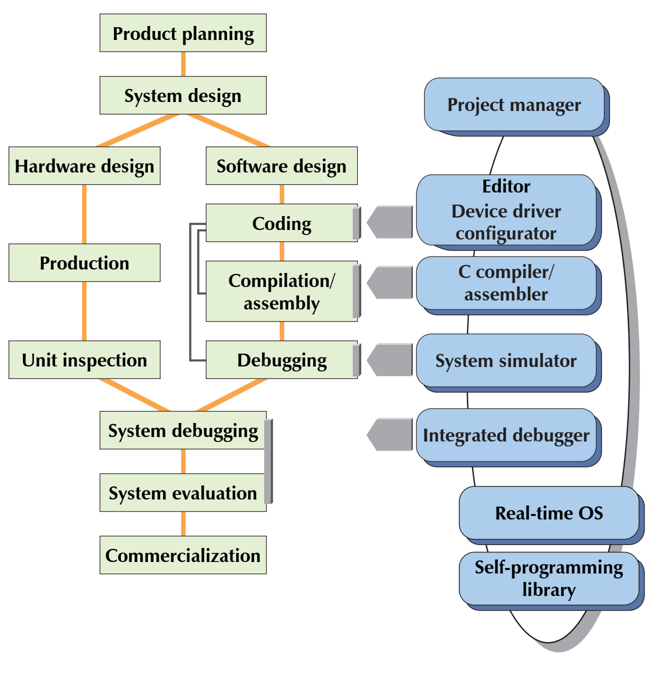

Type	78K0S Microcontrollers	78K0 Microcontrollers	78K0R Microcontrollers
Software package	SP78K0S	SP78K0	SP78K0R[Note 1]
Project manager	PM+	PM+	PM+[Note 1]
C compiler	CC78K0S	CC78K0	CC78K0R[Note 1]
Assembler	RA78K0S	RA78K0	RA78K0R[Note 1]
System simulator	SM+[Note 2], SM78K0S	SM+[Note 3], SM78K0	SM+ for 78K0R/Kx3 (instruction + peripheral simulation)[Note 1] SM+ for 78K0R (instruction simulation)[Note 1]
Integrated debugger	ID78K0S-QB, ID78K0S-NS	ID78K0-QB, ID78K0-NS	ID78K0R-QB
Real-time OS	–	–	RX78K0R[Note 1]
Self-programming library	Sample program	Sample program	Note 1
Device driver configurator	Applilet[Note 4]	Applilet[Note 5]	Applilet for 78K0R/Kx3[Note 6]

Notes 1. Under development
2. Supported only 78K0/Kx1+
3. Supported only 78K0/Kx2
4. Supported only 78K0S/Kx1+
5. Supported only 78K0/Kx2 and 78K0/Lx2 (under development)
6. Supported only 78K0R/Kx3 (under development)

• Software package
- · Project manager, C compiler, assembler, system simulator (part), Integrated debugger, etc. provided on a single CD-ROM disk.

• Project manager
- · Various development tools integrated on Windows.
- · A series of operations, such as editor, builder, and debugger startup, is possible.

• C compiler
- · ANSI C standard compliant.
- · Support of extended specifications unique to 78K0, 78K0S microcontrollers.

• System simulator
- · Same GUI design as that of an integrated debugger.
- · Evaluation possible without target prior to target completion.

• Integrated debugger
- · Operates on Windows.
- · Easy to understand and use GUI (Graphical User Interface).
- · Buttons provided for frequency used commands.
- · Can be started up with a simple mouse click.

• Assembler
- · Source program, which are described in the assembly language, is converted into the machine language.
- · Configuration from the following six programs.
  - ♦ **Structured assembler preprocessor**
  - ♦ **Assembler**
  - ♦ **Linker**
  - ♦ **Object converter**
  - ♦ **Librarian**
  - ♦ **List converter**
- · Also including project manager PM+.

• Real-time OS
- · μITRON4.0 specification compliant.

• Self-programming library
- · The flash memory can be programmed with the microcontroller itself, without using a programmer.
- · Built-in boot swap function for protecting the boot area at power down.

• Device driver configurator
- · The initialization program of troublesome peripheral functions (a timer, UART, etc.) is generated simply.

• FLASH MEMORY PROGRAMMER

Name	PG-FP4		QB-MINI2 (MINICUBE2)	
Object device	All NEC Electronics microcontrollers with flash memory.	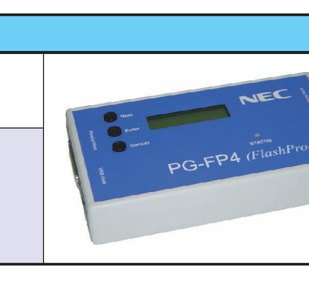	All flash microcontrollers.	
Sales form	It sells per one piece.		· It sells per one piece. · Included with IECUBE (under planning)	

Remark A PROM programmer is not indicated to this selection guide.

• **The information in this document is current as of February, 2007. The information is subject to change without notice. For actual design-in, refer to the latest publications of NEC Electronics data sheets or data books, etc., for the most up-to-date specifications of NEC Electronics products. Not all products and/or types are available in every country. Please check with an NEC Electronics sales representative for availability and additional information.**
• No part of this document may be copied or reproduced in any form or by any means without the prior written consent of NEC Electronics. NEC Electronics assumes no responsibility for any errors that may appear in this document.
• NEC Electronics does not assume any liability for infringement of patents, copyrights or other intellectual property rights of third parties by or arising from the use of NEC Electronics products listed in this document or any other liability arising from the use of such products. No license, express, implied or otherwise, is granted under any patents, copyrights or other intellectual property rights of NEC Electronics or others.
• Descriptions of circuits, software and other related information in this document are provided for illustrative purposes in semiconductor product operation and application examples. The incorporation of these circuits, software and information in the design of a customer's equipment shall be done under the full responsibility of the customer. NEC Electronics assumes no responsibility for any losses incurred by customers or third parties arising from the use of these circuits, software and information.
• While NEC Electronics endeavors to enhance the quality, reliability and safety of NEC Electronics products, customers agree and acknowledge that the possibility of defects thereof cannot be eliminated entirely. To minimize risks of damage to property or injury (including death) to persons arising from defects in NEC Electronics products, customers must incorporate sufficient safety measures in their design, such as redundancy, fire-containment and anti-failure features.
• NEC Electronics products are classified into the following three quality grades: "Standard", "Special" and "Specific".
The "Specific" quality grade applies only to NEC Electronics products developed based on a customer-designated "quality assurance program" for a specific application. The recommended applications of an NEC Electronics product depend on its quality grade, as indicated below. Customers must check the quality grade of each NEC Electronics product before using it in a particular application.
"Standard": Computers, office equipment, communications equipment, test and measurement equipment, audio and visual equipment, home electronic appliances, machine tools, personal electronic equipment and industrial robots.
"Special": Transportation equipment (automobiles, trains, ships, etc.), traffic control systems, anti-disaster systems, anti-crime systems, safety equipment and medical equipment (not specifically designed for life support).
"Specific": Aircraft, aerospace equipment, submersible repeaters, nuclear reactor control systems, life support systems and medical equipment for life support, etc.

The quality grade of NEC Electronics products is "Standard" unless otherwise expressly specified in NEC Electronics data sheets or data books, etc. If customers wish to use NEC Electronics products in applications not intended by NEC Electronics, they must contact an NEC Electronics sales representative in advance to determine NEC Electronics' willingness to support a given application.

(Note)
(1) "NEC Electronics" as used in this statement means NEC Electronics Corporation and also includes its majority-owned subsidiaries.
(2) "NEC Electronics products" means any product developed or manufactured by or for NEC Electronics (as defined above).

M8E 02.11-1

For further information, please contact:

NEC Electronics Corporation
1753, Shimonumabe,
Nakahara-ku,
Kawasaki, Kanagawa 211-8668,
Japan
Tel: 044-435-5111
http://www.necel.com/

[America]

NEC Electronics America, Inc.
2880 Scott Blvd.
Santa Clara, CA 95050-2554,
U.S.A.
Tel: 408-588-6000
800-366-9782
http://www.am.necel.com/

[Europe]

NEC Electronics (Europe) GmbH
Arcadiastrasse 10
40472 Düsseldorf, Germany
Tel: 0211-65030
http://www.eu.necel.com/

Hanover Office
Podbielskistrasse 166 B
30177 Hannover
Tel: 0 511 33 40 2-0

Munich Office
Werner-Eckert-Strasse 9
81829 München
Tel: 0 89 92 10 03-0

Stuttgart Office
Industriestrasse 3
70565 Stuttgart
Tel: 0 711 99 01 0-0

United Kingdom Branch
Cygnus House, Sunrise Parkway
Linford Wood, Milton Keynes
MK14 6NP, U.K.
Tel: 01908-691-133

Succursale Française
9, rue Paul Dautier, B.P. 52
78142 Velizy-Villacoublay Cédex
France
Tel: 01-3067-5800

Sucursal en España
Juan Esplandiu, 15
28007 Madrid, Spain
Tel: 091-504-2787

Tyskland Filial
Täby Centrum
Entrance S (7th floor)
18322 Täby, Sweden
Tel: 08 638 72 00

Filiale Italiana
Via Fabio Filzi, 25/A
20124 Milano, Italy
Tel: 02-667541

Branch The Netherlands
Steijgerweg 6
5616 HS Eindhoven
The Netherlands
Tel: 040 265 40 10

[Asia & Oceania]

NEC Electronics (China) Co., Ltd
7th Floor, Quantum Plaza,
No. 27 ZhiChunLu Haidian
District, Beijing 100083, P.R.
China
TEL: 010-8235-1155
http://www.cn.necel.com/

NEC Electronics Shanghai Ltd.
Room 2511-2512,
Bank of China Tower,
200 Yincheng Road Central,
Pudong New Area, Shanghai P.R.
China P.C:200120
Tel: 021-5888-5400
http://www.cn.necel.com/

NEC Electronics Hong Kong Ltd.
12/F., Cityplaza 4,
12 Taikoo Wan Road, Hong Kong
Tel: 2886-9318
http://www.hk.necel.com/

NEC Electronics Taiwan Ltd.
7F, No. 363 Fu Shing North Road
Taipei, Taiwan, R. O. C.
Tel: 02-8175-9600
http://www.tw.necel.com/

NEC Electronics Singapore Pte. Ltd.
238A Thomson Road,
#12-08 Novena Square,
Singapore 307684
Tel: 6253-8311
http://www.sg.necel.com/

NEC Electronics Korea Ltd.
11F., Samik Lavied'or Bldg., 720-2,
Yeoksam-Dong, Kangnam-Ku,
Seoul, 135-080, Korea
Tel: 02-558-3737
http://www.kr.necel.com/

G06.11'

Document No. U17652EJ4V0SG00 (4th edition)
Date Published February 2007 NS CP(K)

Printed in Japan

Empower your creativity

V850

Embedded Controller

32-bit Single-chip Microcontrollers

Empowered by Innovation

NEC

V850 MICROCONTROLLERS

Device				Memory				Clock			I/O	Bus	Timer						Serial Interface													OCD	Peripheral Functions				Others		
Applications	CPU core	Commercial name	Product name	ROM size [K bytes]	ROM type	Single Voltage Flash	RAM size [K bytes]	Maximum operating frequency [MHz]	Internal oscillator [Hz]	Subclock (32.768 kHz)	I/O port	External bus data/address	16-bit timer	8-bit timer	Other timer	Watch timer	Watchdog timer	PWM output	UART	UART (supporting LIN)	UART/CSI	UART (supporting LIN)/CSI	UART/I²C	UART (supporting LIN)/I²C	CSI	CSI/I²C	CSI with automatic transmission/reception function	I²C	IEBus	CAN	CAN/IEBus	On-chip debug	LCD [segment x common]	10-bit A/D converter	8-bit D/A converter	Other functions	Power supply voltage [V]	Package (size [mm])	In-circuit emulator, Emulation board
ALL Flash	V850ES	V850ES/HE2	µPD70F3700	64	Flash	√	6	20	200 k	√	51	–/–	6	–	–	1	1	16-bit x 7	–	2	–	–	–	–	2	–	–	–	–	–	–	√	–	10	–	POC, LVI, CLM	3.5 to 5.5	64-LQFP (10 x 10)	QB-MINI2 (MINICUBE2) QB-V850MINI (MINICUBE) QB-V850ESFX2 (IECUBE)
			µPD70F3701	128																																			
		V850ES/HF2	µPD70F3702	64	Flash	√	12	20	200 k	√	67	–/–	6	–	–	1	1	16-bit x 7	–	2	–	–	–	–	2	–	–	–	–	–	–	√	–	12	–	POC, LVI, CLM	3.5 to 5.5	80-TQFP (12 x 12)	
			µPD70F3703	128																																			
			µPD70F3704	256																																			
		V850ES/HG2	µPD70F3706	128	Flash	√	12	20	200 k	√	84	–/–	7	–	–	1	1	16-bit x 10	–	3	–	–	–	–	2	–	–	–	–	–	–	√	–	16	–	POC, LVI, CLM, DMA	3.5 to 5.5	100-LQFP (14 x 14)	
			µPD70F3707	256																																			
		V850ES/HJ2	µPD70F3709	128	Flash	√	12	20	200 k	√	128	16/16	8	–	–	1	1	16-bit x 13	–	3	–	–	–	–	3	–	–	–	–	–	–	√	–	24	–	POC, LVI, CLM, DMA	3.5 to 5.5	144-LQFP (20 x 20)	
			µPD70F3710	256																																			
			µPD70F3711	376			20													4																			
			µPD70F3712	512																																			
		V850ES/IE2	µPD70F3713	64	Flash	√	6	20	–	–	39	–/–	7	–	–	–	1	16-bit x 6 (6-phase 16-bit x 1)	1	–	–	–	–	–	2	–	–	–	–	–	–	√	–	8	–	POC, LVI	3.5 to 5.5	64-LQFP (14 x 14)	QB-MINI2 (MINICUBE2) QB-V850ESIX2 (IECUBE)
			µPD70F3714	128																																			
		V850ES/JG2	µPD70F3715	128	Flash	√	12	20	200 k	√	84	16/22	8	–	–	1	1	16-bit x 9	–	–	–	1	–	2	3	1	–	–	–	–	–	√	–	12	2	LVI, CLM, DMA	2.85 to 3.6	100-LQFP (14 x 14) 100-QFP (14 x 20) 100-LQFP (14 x 14)	QB-MINI2 (MINICUBE2) QB-V850MINI (MINICUBE) QB-V850ESSX2 (IECUBE)
			µPD70F3716	256			24																																
			µPD70F3717	384			32																																
			µPD70F3718	512			40																																
			µPD70F3719	640			48																																
		V850ES/JJ2	µPD70F3720	128	Flash	√	12	20	200 k	√	128	16/24	11	–	–	1	1	16-bit x 12	–	1	–	1	–	2	4	1	–	–	–	–	–	√	–	16	2	LVI, CLM, DMA	2.85 to 3.6	144-LQFP (20 x 20)	
			µPD70F3721	256			24																																
			µPD70F3722	384			32																																
			µPD70F3723	512			40																																
			µPD70F3724	640			48																																
		V850ES/JJ3	µPD70F3745 *	768	Flash	√	60	32	220 k	√	128	16/24	11	–	–	1	1	16-bit x 12	–	1	–	1	–	2	4	1	–	–	–	–	–	√	–	16	2	LVI, CLM, DMA, CRC	2.85 to 3.6	144-LQFP (20 x 20)	
			µPD70F3746 *	1024																																			
		V850ES/KE2	µPD70F3726	128	Flash	√	4	20	–	√	51	–/–	2	5	–	1	2	16-bit x 2, 8-bit x 4	2	–	–	–	–	–	2	–	–	1	–	–	–	√	–	8	–	–	2.7 to 5.5	64-LQFP (10 x 10)	QB-MINI2 (MINICUBE2) QB-V850MINI (MINICUBE) + QB-V850ESKX1H-DA QB-V850ESKX1H (IECUBE)
		V850ES/KF2	µPD70F3728	128	Flash	√	6	20	–	√	67	16/16	3	5	–	1	2	16-bit x 3, 8-bit x 4	2	–	–	–	–	–	2	–	1	1	–	–	–	√	–	8	–	–	2.7 to 5.5	80-QFP (14 x 14)	
			µPD70F3729	256			12																																
		V850ES/KG2	µPD70F3731	128	Flash	√	6	20	–	√	84	16/22	5	5	–	1	2	16-bit x 5, 8-bit x 4	2	–	1	–	–	–	1	–	2	1	–	–	–	√	–	8	2	DMA	2.7 to 5.5	100-LQFP (14 x 14) 100-QFP (14 x 20)	
			µPD70F3732	256			16																																
		V850ES/KJ2	µPD70F3733	128	Flash	√	6	20	–	√	128	16/24	7	5	–	1	2	16-bit x 7, 8-bit x 4	2	–	1[Note 1]	–	1[Note 1]	–	2	–	2	1	–	–	–	√	–	16	2	DMA	2.7 to 5.5	144-LQFP (20 x 20)	QB-MINI2 (MINICUBE2) QB-V850MINI (MINICUBE) QB-V850ESKX1H (IECUBE)
			µPD70F3734	256			16																																
General Purpose (Low-end)	V850ES	V850ES/KE1	µPD703207(/Y)	128	Mask	–	4	20	–	√	51	–/–	2	5	–	1	2	16-bit x 2, 8-bit x 4	2	–	–	–	–	–	2	–	–	(1)	–	–	–	–	–	8	–	ROMC	2.7 to 5.5	64-LQFP (10 x 10) 64-TQFP (12 x 12)	QB-V850MINI (MINICUBE) + QB-V850ESKX1-DA QB-V850ESKX1H (IECUBE)
			µPD70F3207H(/Y)		Flash	√																																	
		V850ES/KF1	µPD703208(/Y)	64	Mask	–	4	20	–	√	67	16/16	2	5	–	1	2	16-bit x 2, 8-bit x 4	2	–	–	–	–	–	2	–	1	(1)	–	–	–	–	–	8	–	ROMC	2.7 to 5.5	80-TQFP (12 x 12) 80-QFP (14 x 14)	
			µPD703209(/Y)	96																																			
			µPD703210(/Y)	128			6																																
			µPD70F3210(/Y)		Flash																																		
			µPD70F3210H(/Y)			√																																	
			µPD703211(/Y)	256	Mask	–	12						3					16-bit x 3, 8-bit x 4																					
			µPD70F3211H(/Y)		Flash	√																																	
		V850ES/KG1	µPD703212(/Y)	64	Mask	–	4	20	–	√	84	16/22	4	5	–	1	2	16-bit x 4, 8-bit x 4	2	–	–	–	–	–	2	–	2	(1)	–	–	–	–	–	8	2	ROMC	2.7 to 5.5	100-LQFP (14 x 14) 100-LQFP (14 x 14) 100-QFP (14 x 20)	
			µPD703213(/Y)	96																																			
			µPD703214(/Y)	128			6																																
			µPD70F3214(/Y)		Flash																																		
			µPD70F3214H(/Y)			√																																	
			µPD703215(/Y)	256	Mask	–	16						5					16-bit x 5, 8-bit x 4																					
			µPD70F3215H(/Y)		Flash	√																																	
		V850ES/KJ1	µPD703216(/Y)	96	Mask	–	6	20	–	√	128	16/24	6	5	–	1	2	16-bit x 6, 8-bit x 4	3 (2)	–	–	–	0 (1)	–	3	–	2	(1)	–	–	–	–	–	16	2	ROMC	2.7 to 5.5	144-LQFP (20 x 20)	QB-V850MINI (MINICUBE) QB-V850ESKX1H (IECUBE)
			µPD703217(/Y)	128																																			
			µPD70F3217(/Y)		Flash																																		
			µPD70F3217H(/Y)			√																																	
			µPD70F3218H(/Y)	256			16						7					16-bit x 7, 8-bit x 4														√							
		V850ES/KE1+	µPD703302(/Y)	128	Mask	–	4	20	240 k	√	51	–/–	2	5	–	1	2	16-bit x 2, 8-bit x 4	1	1	–	–	–	–	2	–	–	(1)	–	–	–	–	–	8	–	POC, LVI, CLM, ROMC	2.7 to 5.5	64-LQFP (10 x 10) 64-TQFP (12 x 12)	QB-V850MINI (MINICUBE) + QB-V850ESKX1H-DA QB-V850ESKX1H (IECUBE)
			µPD70F3302(/Y)		Flash	√																																	
		V850ES/KF1+	µPD70F3306(/Y)	128	Flash	√	6	20	240 k	√	67	16/16	3	5	–	1	2	16-bit x 3, 8-bit x 4	1	1	–	–	–	–	2	–	1	(1)	–	–	–	–	–	8	–	POC, LVI, CLM, ROMC	2.7 to 5.5	80-TQFP (12 x 12) 80-QFP (14 x 14)	
			µPD703308(/Y)	256	Mask	–	12																																
			µPD70F3308(/Y)		Flash	√																																	
		V850ES/KG1+	µPD70F3311(/Y)	128	Flash	√	6	20	240 k	√	84	16/22	5	5	–	1	2	16-bit x 5, 8-bit x 4	1	1	1	–	–	–	1	–	2	(1)	–	–	–	–	–	8	2	POC, LVI, CLM, DMA, ROMC	2.7 to 5.5	100-LQFP (14 x 14) 100-QFP (14 x 20)	
			µPD703313(/Y)	256	Mask	–	16																																
			µPD70F3313(/Y)		Flash	√																																	
		V850ES/KJ1+	µPD70F3316(/Y)	128	Flash	√	6	20	240 k	√	128	16/24	7	5	–	1	2	16-bit x 7, 8-bit x 4	2[Note 1] (1)	1	1[Note 1]	–	0 (1[Note 1])	–	2	–	2	(1)	–	–	–	–	–	16	2	POC, LVI, CLM, DMA	2.7 to 5.5	144-LQFP (20 x 20)	QB-V850MINI (MINICUBE) QB-V850ESKX1H (IECUBE)
			µPD70F3318(/Y)	256			16																											√							
General Purpose (Middle-range)	V850ES	V850ES/SA2	µPD703200(/Y)	128	Mask	–	8	20	–	√	82	16/22	2	4	–	–	1	16-bit x 2, 8-bit x 4	1	–	1	–	–	–	3 (2)	0 (1)	–	–	–	–	–	–	–	12	2	DMA, ROMC	2.2 to 2.7	100-TQFP (14 x 14)	IE-V850ES-G1 + IE-703204-G1-EM1
			µPD703201(/Y)	256			16																																
			µPD70F3201(/Y)		Flash	√																																	
		V850ES/SA3	µPD703204(/Y)	256	Mask	–	16	20	–	√	102	16/24	2	4	–	–	1	16-bit x 2, 8-bit x 4	1	–	1	–	–	–	4 (3)	0 (1)	–	–	–	–	–	–	–	16	2	DMA, ROMC	2.2 to 2.7	121-FBGA (12 x 12)	
			µPD70F3204(/Y)		Flash	√																																	
		V850ES/ST2	µPD703220	–	–	–	48	34	–	–	65	16/22	7	–	–	–	1	16-bit x 6	1	–	1	–	–	–	1	–	–	–	–	–	–	–	–	8	2	–	3.0 to 3.6	120-TQFP (14 x 14) 144-LQFP (20 x 20)	IE-V850ES-G1 + IE-703220-G1-EM1
	V850	V850/SA1	µPD703014B(/Y)	64	Mask	–	4	20	–	√	85	16/22	2	4	–	1	1	16-bit x 2, 8-bit x 4	1	–	1	–	–	–	2 (1)	0 (1)	–	–	–	–	–	–	–	12	–	DMA	2.7 to 3.6	100-LQFP (14 x 14) 121-FBGA (12 x 12)	IE-703002-MC + IE-703017-MC-EM1
			µPD703015B(/Y)	128																																			
			µPD70F3015B(/Y)		Flash																																		
			µPD703017A(/Y)	256	Mask		8																																
			µPD70F3017A(/Y)		Flash																																		
		V850/SB1	µPD703031BY	128	Mask	–	8	20	–	√	83	16/22	2	6	–	1	1	16-bit x 2, 8-bit x 4	–	–	2	–	–	–	3 (1)	0 (2)	–	–	–	–	–	–	–	12	–	DMA, ROMC	4.0 to 5.5	100-LQFP (14 x 14) 100-QFP (14 x 20) 100-QFP (14 x 20)	IE-703002-MC + IE-703037-MC-EM1
			µPD703033BY	256			16																																
			µPD70F3033BY		Flash																																		
			µPD703030BY	384	Mask		24																																
			µPD70F3030BY		Flash																																		
			µPD703032BY	512	Mask																																		
			µPD70F3032BY		Flash																																		
General Purpose (High-end)	V850E2	V850E2/ME3	µPD703500	168	RAM	–	32	200	–	–	78	32/26	12	–	–	–	–	16-bit x 8	1	–	1	–	–	–	1	–	–	–	–	–	–	√	–	8	–	8 KB instruction cache, 8 KB data cache, USB, DMA	1.4 to 1.65 3.0 to 3.6	176-QFP (24 x 24)	–
	V850E1	V850E/ME2	µPD703111B-10	128	RAM	–	16	100	–	–	78	32/26	12	–	–	–	–	16-bit x 8	1	–	1	–	–	–	1	–	–	–	–	–	–	√	–	8	–	8 KB instruction cache, USB, DMA	1.35 to 1.65 3.0 to 3.6	176-LQFP (24 x 24)	QB-V850MINI (MINICUBE)
			µPD703111B-13					133																															
			µPD703111B-15					150																														1.4 to 1.65 3.0 to 3.6		
		V850E/MA3	µPD703136A(/Y)	256	Mask	–	8	80	–	–	112	16/26	9	–	–	–	1	16-bit x 6, 6-phase 16-bit x 1	1 (0)	–	3	–	0 (1)	–	–	–	–	–	–	–	–	√	–	8	2	DMA, ROMC	2.3 to 2.7 3.0 to 3.6	144-LQFP (20 x 20) 161-FBGA (13 x 13)	QB-V850MINI (MINICUBE) QB-V850EMA3 (IECUBE)
			µPD703131A(/Y)				16																																
			µPD703132A(/Y)				32																																
			µPD703133A(/Y)	512			16																																
			µPD703134A(/Y)				32																																
			µPD70F3134A(/Y)		Flash	√																																	
		V850E/MA1	µPD703103A	–	–	–	4	50	–	–	115	16/26	8	–	–	–	–	16-bit x 4, 12-bit x 2	1	–	2	–	–	–	1	–	–	–	–	–	–	–	–	8	–	DMA	3.0 to 3.6	144-LQFP (20 x 20) 144-LQFP (20 x 20) 161-FBGA (13 x 13)	IE-V850E-MC-A + IE-703107-MC-EM1
			µPD703105A	128	Mask																																		
			µPD703106A				10																																
			µPD703107A	256																																			
			µPD70F3107A		Flash																																		
		V850E/MA2	µPD703108	–	–	–	4	40	–	–	79	16/25	6	–	–	–	–	16-bit x 1	–	–	2	–	–	–	–	–	–	–	–	–	–	–	–	4	–	DMA	3.0 to 3.6	100-LQFP (14 x 14)	
		V850E/MS1	µPD703100A	–	–	–	4	33	–	–	123	16/24	8	–	–	–	–	16-bit x 12	–	–	2	–	–	–	2	–	–	–	–	–	–	–	–	8	–	DMA	3.0 to 3.6	144-LQFP (20 x 20)	IE-703102-MC + IE-703102-MC-EM1-A
			µPD703101A	96	Mask																																		
			µPD703102A	128																																			
			µPD70F3102A		Flash																																		
			µPD703100	–	–																																3.0 to 3.6 4.5 to 5.5		IE-703102-MC + IE-703102-MC-EM1
			µPD703101	96	Mask																																		
			µPD703102	128																																			
			µPD70F3102		Flash																																		
		V850E/MS2	µPD703130	–	–	–	4	33	–	–	57	16/24	6	–	–	–	–	16-bit x 3	–	–	2	–	–	–	–	–	–	–	–	–	–	–	–	4	–	DMA	3.0 to 3.6 4.5 to 5.5	100-LQFP (14 x 14)	IE-703102-MC + IE-703102-MC-EM1 + VP-V850E/MS1-MS2[Note 2]
Inverter Control	V850E1	V850E/IA1	µPD703116	256	Mask	–	10	50	–	–	83	16/24	8	–	–	–	–	16-bit x 11 (6-phase 16-bit x 2)	3	–	–	–	–	–	2	–	–	–	–	1	–	–	–	16	–	DMA	3.0 to 3.6 4.5 to 5.5	144-LQFP (20 x 20)	IE-V850E-MC + IE-703116-MC-EM1
			µPD70F3116		Flash																															Non break debug			
		V850E/IA2	µPD703114	128	Mask	–	6	40	–	–	53	16/22	7	–	–	–	–	16-bit x 11 (6-phase 16-bit x 2)	1	–	1	–	–	–	1	–	–	–	–	–	–	–	–	14	–	DMA	3.0 to 3.6 4.5 to 5.5	100-LQFP (14 x 14) 100-QFP (14 x 20)	IE-V850E-MC + IE-703114-MC-EM1
			µPD70F3114		Flash																																		
		V850E/IA3	µPD703183	128	Mask	–	6	64	–	–	50	–/–	8	–	–	–	1	16-bit x 5 (6-phase 16-bit x 1)	1	–	1	–	–	–	1	–	–	–	–	–	–	–	–	12	–	DMA, ROMC, Op-amplifier, comparator	2.3 to 2.7 4.0 to 5.5	80-QFP (14 x 14)	QB-V850EIA4 (IECUBE)
			µPD70F3184	256	Flash	√	12																																
		V850E/IA4	µPD703185	128	Mask	–	6	64	–	–	64	–/–	9	–	–	–	1	16-bit x 6 (6-phase 16-bit x 2)	1	–	1	–	–	–	1	–	–	–	–	–	–	–	–	16	–	DMA, ROMC, Op-amplifier, comparator	2.3 to 2.7 4.0 to 5.5	100-LQFP (14 x 14) 100-QFP (14 x 20)	QB-V850MINI (MINICUBE) QB-V850EIA4 (IECUBE)
			µPD703186	256			12																																
			µPD70F3186		Flash	√																										√							
	V850ES	V850ES/IK1	µPD703327	64	Mask	–	4	32	–	–	39	–/–	7	–	–	–	1	16-bit x 6 (6-phase 16-bit x 1)	1	–	–	–	–	–	2	–	–	–	–	–	–	–	–	8	–	POC, LVI, ROMC	3.5 to 5.5	64-LQFP (14 x 14)	QB-V850EIA4 (IECUBE)
			µPD703329	128			6																																
			µPD70F3329		Flash	√																																	
DVC Control	V850E1	V850E/SV2	µPD703166(/Y)	512	Mask	–	24	37.5	–	–	195	16/26	12	12	32-bit x 1	–	1	16-bit x 11, 8-bit x 12	1	–	1	–	–	–	3	–	2	(1)	–	–	–	√	–	24	–	DMA, ROMC, JTAG	2.3 to 2.7 2.7 to 3.6	257-FBGA (14 x 14)	QB-V850MINI (MINICUBE) IE-V850E-MC-A + IE-703166-MC-EM1
			µPD70F3166(/Y)		Flash	√																																	
	V850	V850/SV1	µPD703041(/Y)	192	Mask	–	8	20	–	√	151	16/22	2	8	24-bit x 2	1	1	24-bit x 2, 16-bit x 6, 8-bit x 8	–	–	2	–	–	–	3 (1)	0 (2)	–	–	–	–	–	–	–	16	–	DMA, ROMC, Vsync/Hsync separator	2.7 to 3.6	176-LQFP (24 x 24) 176-LQFP (24 x 24) 180-FBGA (13 x 13) 180-FBGA (13 x 13)	IE-703002-MC + IE-703040-MC-EM1
			µPD703039(/Y)	256																																			
			µPD703040(/Y)				16																																
			µPD70F3040(/Y)		Flash																																		
			µPD703038(/Y)	384	Mask																																		
			µPD70F3038(/Y)		Flash																																		
Car Electronics Car Multimedia (General Purpose)	V850ES	V850ES/SG1	µPD703249Y	256	Mask	–	12	20	200 k	√	84	16/22	6	–	–	1	1	16-bit x 5	2	–	–	–	–	–	2	1	–	1	–	–	–	–	–	12	–	CLM, ROMC	2.85 to 3.6	100-LQFP (14 x 14) 100-QFP (14 x 20) 100-LQFP (14 x 14)	QB-V850MINI (MINICUBE) QB-V850ESSX2 (IECUBE)
		V850ES/SG2	µPD703260Y				24						8					16-bit x 9	–			1		2	3			–							2	LVI, CLM, DMA, ROMC, CRC			
			µPD703261Y	384			32																																
			µPD70F3261Y		Flash	√																										√							
			µPD703262Y	512	Mask	–	40																									–							
			µPD703263Y	640			48																																
			µPD70F3263Y		Flash	√																										√							
			µPD703262HY	512	Mask	–	40	32																								–				CLM, DMA, ROMC, CRC	3.0 to 3.6		
			µPD703263HY	640			48																																
			µPD70F3263HY		Flash	√																										√							
		V850ES/SJ2	µPD703264Y	384	Mask	–	32	20	200 k	√	128	16/24	11	–	–	1	1	16-bit x 12	–	1	–	1	–	2	4	1	–	–	–	–	–	–	–	16	2	LVI, CLM, DMA, ROMC, CRC	2.85 to 3.6	144-LQFP (20 x 20)	
			µPD70F3264Y		Flash	√																										√							
			µPD703265Y	512	Mask	–	40																									–							
			µPD703266Y	640			48																																
			µPD70F3266Y		Flash	√																										√							
			µPD703265HY	512	Mask	–	40	32																								–				CLM, DMA, ROMC, CRC	3.0 to 3.6		
			µPD703266HY	640			48																																
			µPD70F3266HY		Flash	√																										√							
	V850	V850/SC1	µPD703068Y	512	Mask	–	24	20	–	√	124	16/22	10	–	–	1	1	16-bit x 10	2	–	2	–	–	–	2	2	–	–	–	–	–	–	–	12	–	DMA, ROMC	3.5 to 5.5	144-LQFP (20 x 20)	IE-703002-MC + IE-703089-MC-EM1
			µPD70F3089Y[Note 3]		Flash																							1	2							4.0 to 5.5		
Car Multimedia (IEBus Controller)	V850ES	V850ES/SG3	µPD70F3333 *	256	Flash	√	24	32	220 k	√	84	16/22	8	–	–	1	1	16-bit x 9	–	–	–	1	–	2	3	1	–	–	1	–	–	√	–	12	2	LVI, CLM, DMA, ROMC, CRC	2.85 to 3.6	100-LQFP (14 x 14)	QB-V850MINI (MINICUBE) QB-V850ESSX2 (IECUBE)
			µPD70F3334 *	384			32																																
			µPD70F3340 *	512			40																																
			µPD70F3341 *	640			48																																
			µPD70F3342 *	768			60																																
			µPD70F3343 *	1024																																			
		V850ES/SJ3	µPD70F3344 *	384	Flash	√	32	32	220 k	√	128	16/24	11	–	–	1	1	16-bit x 12	–	1	–	1	–	2	4	1	–	–	1	–	–	√	–	16	2	LVI, CLM, DMA, ROMC, CRC	2.85 to 3.6	144-LQFP (20 x 20)	
			µPD70F3345 *	512			40																																
			µPD70F3346 *	640			48																																
			µPD70F3347 *	768			60																																
			µPD70F3348 *	1024																																			
		V850ES/SG1	µPD703252Y	256	Mask	–	12	20	200 k	√	84	16/22	6	–	–	1	1	16-bit x 5	2	–	–	–	–	–	2	1	–	1	1	–	–	–	–	12	–	CLM, ROMC	2.85 to 3.6	100-LQFP (14 x 14) 100-QFP (14 x 20) 100-LQFP (14 x 14)	
		V850ES/SG2	µPD703270Y				24						8					16-bit x 9	–			1		2	3			–							2	LVI, CLM, DMA, ROMC, CRC			
			µPD703271Y	384			32																																
			µPD70F3271Y		Flash	√																										√							
			µPD703272Y	512	Mask	–	40																									–							
			µPD703273Y	640			48																																
			µPD70F3273Y		Flash	√																										√							
			µPD703272HY	512	Mask	–	40	32																								–				CLM, DMA, ROMC, CRC	3.0 to 3.6		
			µPD703273HY	640			48																																
			µPD70F3273HY		Flash	√																										√							
		V850ES/SJ2	µPD703274Y	384	Mask	–	32	20	200 k	√	128	16/24	11	–	–	1	1	16-bit x 12	–	1	–	1	–	2	4	1	–	–	1	–	–	–	–	16	2	LVI, CLM, DMA, ROMC, CRC	2.85 to 3.6	144-LQFP (20 x 20)	
			µPD70F3274Y		Flash	√																										√							
			µPD703275Y	512	Mask	–	40																									–							
			µPD703276Y	640			48																																
			µPD70F3276Y		Flash	√																										√							
			µPD703275HY	512	Mask	–	40	32																								–				CLM, DMA, ROMC, CRC	3.0 to 3.6		
			µPD703276HY	640			48																																
			µPD70F3276HY		Flash	√																										√							
	V850	V850/SB2	µPD703034BY	128	Mask	–	8	12.58	–	√	83	16/22	2	6	–	1	1	16-bit x 2, 8-bit x 4	–	–	2	–	–	–	3 (1)	0 (2)	–	–	1	–	–	–	–	12	–	DMA, ROMC	4.0 to 5.5	100-LQFP (14 x 14) 100-QFP (14 x 20) 100-QFP (14 x 20)	IE-703002-MC + IE-703037-MC-EM1
			µPD703035BY	256			16																																
			µPD70F3035BY		Flash																																		
			µPD703036HY	384	Mask		24	18.87																															
			µPD70F3036HY		Flash																																		
			µPD703037HY	512	Mask																																		
			µPD70F3037HY		Flash																																		
		V850/SC2	µPD703069Y	512	Mask	–	24	18.87	–	√	124	16/22	10	–	–	1	1	16-bit x 10	2	–	2	–	–	–	2	2	–	–	1	–	–	–	–	12	–	DMA, ROMC	3.5 to 5.5	144-LQFP (20 x 20)	IE-703002-MC + IE-703089-MC-EM1
			µPD70F3089Y[Note 3]		Flash																								2							4.0 to 5.5		
Car Multimedia (CAN Controller)	V850ES	V850ES/SG3	µPD70F3335 *	256	Flash	√	24	32	220 k	√	84	16/22	8	–	–	1	1	16-bit x 9	–	–	–	1	–	2	3	1	–	–	–	–	1	√	–	12	2	LVI, CLM, DMA, ROMC, CRC	2.85 to 3.6	100-LQFP (14 x 14)	QB-V850MINI (MINICUBE) QB-V850ESSX2 (IECUBE)
			µPD70F3336 *	384			32																																
			µPD70F3350 *	512			40																																
			µPD70F3351 *	640			48																																
			µPD70F3352 *	768			60																																
			µPD70F3353 *	1024																																			
		V850ES/SJ3	µPD70F3354 *	384	Flash	√	32	32	220 k	√	128	16/24	11	–	–	1	1	16-bit x 12	–	1	–	1	–	2	4	1	–	–	–	–	1	√	–	16	2	LVI, CLM, DMA, ROMC, CRC	2.85 to 3.6	144-LQFP (20 x 20)	
			µPD70F3355 *	512			40																																
			µPD70F3356 *	640			48																																
			µPD70F3357 *	768			60																																
			µPD70F3358 *	1024																																			
			µPD70F3364 *	384			32																							1									
			µPD70F3365 *	512			40																																
			µPD70F3366 *	640			48																																
			µPD70F3367 *	768			60																																
			µPD70F3368 *	1024																																			
		V850ES/SG1	µPD703253Y	128	Mask	–	8	20	200 k	√	84	16/22	7	–	–	1	1	16-bit x 6	2	–	–	–	–	–	2	1	–	1	–	1	–	–	–	12	2	CLM, DMA, ROMC, LVI (2.0 V only)	2.85 to 3.6	100-LQFP (14 x 14)	
		V850ES/SG2	µPD703280Y	256			24						8					16-bit x 9	–			1		2	3			–								LVI, CLM, DMA, ROMC, CRC			
			µPD703281Y	384			32																																
			µPD70F3281Y		Flash	√																										√							
			µPD703282Y	512	Mask	–	40																									–							
			µPD703283Y	640			48																																
			µPD70F3283Y		Flash	√																										√							
			µPD703282HY	512	Mask	–	40	32																								–				CLM, DMA, ROMC, CRC	3.0 to 3.6		
			µPD703283HY	640			48																																
			µPD70F3283HY		Flash	√																										√							
		V850ES/SJ2	µPD703284Y	384	Mask	–	32	20	200 k	√	128	16/24	11	–	–	1	1	16-bit x 12	–	1	–	1	–	2	4	1	–	–	–	1	–	–	–	16	2	LVI, CLM, DMA, ROMC, CRC	2.85 to 3.6	144-LQFP (20 x 20)	
			µPD70F3284Y		Flash	√																										√							
			µPD703285Y	512	Mask	–	40																									–							
			µPD703286Y	640			48																																
			µPD70F3286Y		Flash	√																										√							
			µPD703287Y	512	Mask	–	40																							2		–							
			µPD703288Y	640			48																																
			µPD70F3288Y		Flash	√																										√							
			µPD703285HY	512	Mask	–	40	32																						1		–				CLM, DMA, ROMC, CRC	3.0 to 3.6		
			µPD703286HY	640			48																																
			µPD70F3286HY		Flash	√																										√							
			µPD703287HY	512	Mask	–	40																							2		–							
			µPD703288HY	640			48																																
			µPD70F3288HY		Flash	√																										√							
	V850	V850/SF1	µPD703075AY	128	Mask	–	12	16	–	√	84	16/22	8	–	–	1	1	16-bit x 7	–	–	2	–	–	–	1	1	–	–	–	1	–	–	–	12	–	DMA, ROMC	3.5 to 5.5	100-LQFP (14 x 14) 100-QFP (14 x 20)	IE-703002-MC + IE-703079-MC-EM1
			µPD703076AY																											2									
			µPD703078AY	256			16																							1									
			µPD703079AY																											2									
			µPD70F3079BY		Flash																															4.0 to 5.5		
		V850/SC3	µPD703088Y	512	Mask	–	24	16	–	√	124	16/22	10	–	–	1	1	16-bit x 10	2	–	2	–	–	–	2	2	–	–	–	1	–	–	–	12	–	DMA, ROMC	3.5 to 5.5	144-LQFP (20 x 20)	IE-703002-MC + IE-703089-MC-EM1
			µPD703089Y																											2									
			µPD70F3089Y[Note 3]		Flash																							1								4.0 to 5.5		
Body Control	V850ES	V850ES/FE3	µPD70F3370 *	128	Flash	√	8	32	8 M, 240 k	√	51	–/–	7	–	–	1	1	16-bit x 8 (6-phase 16-bit x 1)	–	2	–	–	–	–	2	–	–	1	–	1	–	√	–	10	–	POC, LVI, CLM, DMA	3.3 to 5.5	64-LQFP (10 x 10)	QB-V850MINI (MINICUBE) QB-V850ESFX3 (IECUBE)
			µPD70F3371 *	256			16																																
		V850ES/FF3	µPD70F3372 *	128	Flash	√	8	32	8 M, 240 k	√	67	–/–	7	–	–	1	1	16-bit x 8 (6-phase 16-bit x 1)	–	2	–	–	–	–	2	–	–	1	–	1	–	√	–	12	–	POC, LVI, CLM, DMA	3.3 to 5.5	80-LQFP (12 x 12)	
			µPD70F3373 *	256			16																																
		V850ES/FG3	µPD70F3374 *	128	Flash	√	8	32	8 M, 240 k	√	84	–/–	8	–	–	1	1	16-bit x 11 (6-phase 16-bit x 1)	–	3	–	–	–	–	2	–	–	1	–	2	–	√	–	16	–	POC, LVI, CLM, DMA	3.3 to 5.5	100-LQFP (14 x 14)	
			µPD70F3375 *	256			16																																
			µPD70F3376 *	384			24	48												5																			
			µPD70F3377 *	512			32																																
		V850ES/FJ3	µPD70F3378 *	256	Flash	√	16	32	8 M, 240 k	√	128	–/–	9	–	–	1	1	16-bit x 14 (6-phase 16-bit x 1)	–	3	–	–	–	–	3	–	–	1	–	2	–	√	–	24	–	POC, LVI, CLM, DMA	3.3 to 5.5	144-LQFP (20 x 20)	
			µPD70F3379 *	384			24	48												6										4									
			µPD70F3380 *	512			32																																
			µPD70F3381 *	768			40																																
			µPD70F3382 *	1024			48																																
		V850ES/FK3	µPD70F3383 *	512	Flash	√	32	48	8 M, 240 k	√	152	–/–	12	–	–	1	1	16-bit x 17 (6-phase 16-bit x 1)	–	8	–	–	–	–	4	–	–	1	–	5	–	√	–	24 + 16	–	POC, LVI, CLM, DMA	3.3 to 5.5	176-LQFP (24 x 24)	
			µPD70F3384 *	768			48																																
			µPD70F3385 *	1024			60																																
		V850ES/FE2	µPD703230	64	Mask	–	4	20	200 k	√	51	–/–	6	–	–	1	1	16-bit x 7	–	2	–	–	–	–	2	–	–	–	–	1	–	–	–	10	–	POC, LVI, CLM	3.5 to 5.5	64-LQFP (10 x 10)	QB-V850MINI (MINICUBE) QB-V850ESFX2 (IECUBE)
			µPD703231	128			6																																
			µPD70F3231		Flash	√																										√							
		V850ES/FF2	µPD703232	128	Mask	–	6	20	200 k	√	67	–/–	6	–	–	1	1	16-bit x 7	–	2	–	–	–	–	2	–	–	–	–	1	–	–	–	12	–	POC, LVI, CLM	3.5 to 5.5	80-TQFP (12 x 12)	
			µPD70F3232		Flash	√	12																									√							
			µPD703233	256	Mask	–																										–							
			µPD70F3233		Flash	√																										√							
		V850ES/FG2	µPD703234	128	Mask	–	6	20	200 k	√	84	–/–	7	–	–	1	1	16-bit x 10	–	3	–	–	–	–	2	–	–	–	–	2	–	–	–	16	–	POC, LVI, CLM, DMA	3.5 to 5.5	100-LQFP (14 x 14)	
			µPD70F3234		Flash	√																										√							
			µPD703235	256	Mask	–	12																									–							
			µPD70F3235		Flash	√																										√							
			µPD70F3236	384			16																																
		V850ES/FJ2	µPD70F3237	256	Flash	√	12	20	200 k	√	128	16/16	8	–	–	1	1	16-bit x 13	–	3	–	–	–	–	3	–	–	–	–	2	–	√	–	24	–	POC, LVI, CLM, DMA	3.5 to 5.5	144-LQFP (20 x 20)	
			µPD70F3238	376			20													4										4									
			µPD70F3239	512																																			
Dashboard Control	V850E1	V850E/DJ3	µPD70F3421 *	256	Flash	√	12	24	240 k	√	114	–/–	13	–	–	1	1	16-bit x 16	–	2	–	–	–	–	2	–	–	2	–	2	–	√	40 x 4	12	–	Meter driver x 6, POC, CLM, DMA, ROMC, Voltage comparator, Sound generator	4.0 to 5.5	144-LQFP (20 x 20)	QB-V850EDJ3 (IECUBE)
			µPD70F3422 *	384			16																																
			µPD703F423 *	512			20																																
			µPD70F3424 *				24	48					17					16-bit x 16							3								–	16		LCD bus interface			
			µPD70F3425 *	1024			32																																

Notes 1. This UART (one channel) is the same channel. Three UART channels are provided in the V850ES/KJ2 and V850ES/KJ1+.

2. Made by Naito Densei Machida Mfg. Co., Ltd.

3. The µPD70F3089Y is the common flash memory product of the V850/SC1, V850/SC2, and V850/SC3.

*: Under development

Remark

OCD:	On-chip debug
POC:	Power-on-clear circuit
LVI:	Low voltage detection circuit
ROMC:	ROM correction
CLM:	Clock monitor

February 2007

Empowered by Innovation NEC

V850 MICROCONTROLLERS DEVELOPMENT TOOL

• HARDWARE DEVELOPMENT ENVIRONMENT

· Functional comparison of each emulator

Item		In-circuit emulator					On-chip emulator	
		QB-V850xxx (IECUBE)	IE-703002-MC	IE-703102-MC	IE-V850E-MC, IE-V850E-MC-A	IE-V850ES-G1	QB-MINI2 (MINICUBE2)	QB-V850MINI (MINICUBE)
Maximum operating frequency		Equivalent to target device						
Emulation memory capacity	Internal ROM	1 MB	512 KB		1 MB		Target device's internal flash ROM capacity	
	Internal RAM	60 KB	28 KB	60 KB			Target device's internal RAM capacity	
	External memory	16 MB (optional)	1 MB	2 MB (disabled for 8-bit bus width)	4 MB (disabled for 8-bit bus width)		None	
Event function	Execution events	10	14				2 execution/access alternate-function pins	
	Access events	6	8					
Event link		1	3				None	
Break function	Hardware break	16	22				2 (a part of device is unsupported)	
	Software break	2000	100				2000 (only number of ROM correction channels of target device can be set to internal ROM)	
	Forcible break	Enabled						
	Step execution	Enabled						
	Fail-safe break	Enabled					Disabled	
Trace function	Trace memory capacity	256 K frames	32 K frames				No trace functions	
	Trace items	Branch, access, timestamp, interpolation function	Instruction execution, access, timestamp					
Time measuring function	Program execution (start - end) measuring	Enabled					Enabled (disabled for V850E/ME2, V850E/SV2)	
	Inter-event measuring	Enabled (8)	Enabled (3)				Disabled	
	Display items of inter-event measuring result	Total value, pass count, maximum value, minimum value, average value	Total value					
	Timeout break	Enabled	Disabled					
Real-time RAM monitor function	No. of points	8	1				Disabled (enabled for pseudo real-time RAM monitor)	
	Maximum capacity	2 KB	1 KB					
Coverage function	Memory capacity	Internal ROM space + an 1 MB space (optional)	1 MB				Disabled	
	Execution coverage	Enabled						
	Access coverage	Disabled		Enabled	Disabled			
Maskable pins		RESET, WAIT, HLDRQ, NMI, STOP				RESET, NMI, STOP	RESET	RESET, WAIT, HLDRQ
PC interface		USB2.0, USB1.1	PCI, PCMCIA				USB2.0, USB1.1	

· System Configuration of an emulator

MINICUBE2

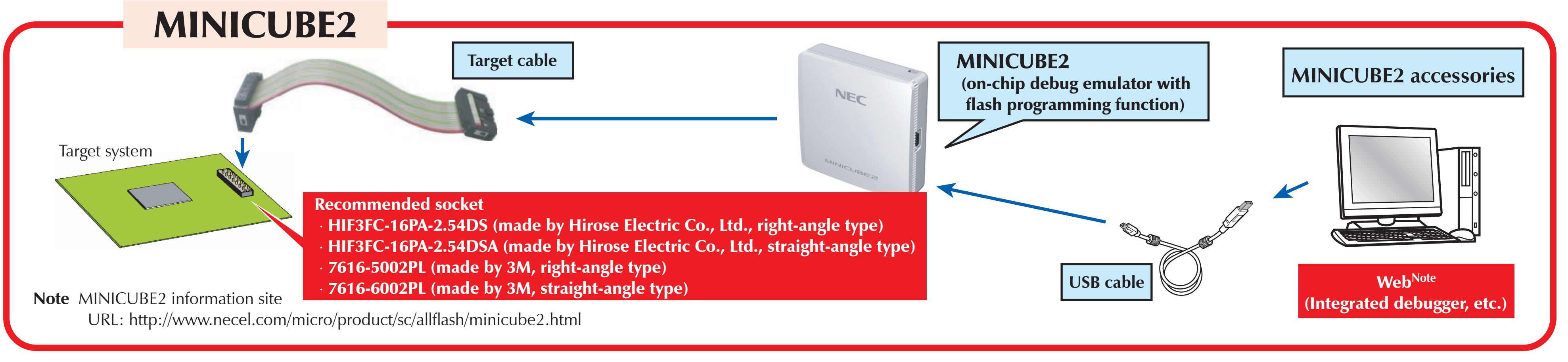

Target cable
MINICUBE2
(on-chip debug emulator with flash programming function)
MINICUBE2 accessories
Target system
USB cable
Web^Note
(Integrated debugger, etc.)

Recommended socket

- · HIF3FC-16PA-2.54DS (made by Hirose Electric Co., Ltd., right-angle type)
- · HIF3FC-16PA-2.54DSA (made by Hirose Electric Co., Ltd., straight-angle type)
- · 7616-5002PL (made by 3M, right-angle type)
- · 7616-6002PL (made by 3M, straight-angle type)

Note MINICUBE2 information site
URL: http://www.necel.com/micro/product/sc/allflash/minicube2.html

MINICUBE

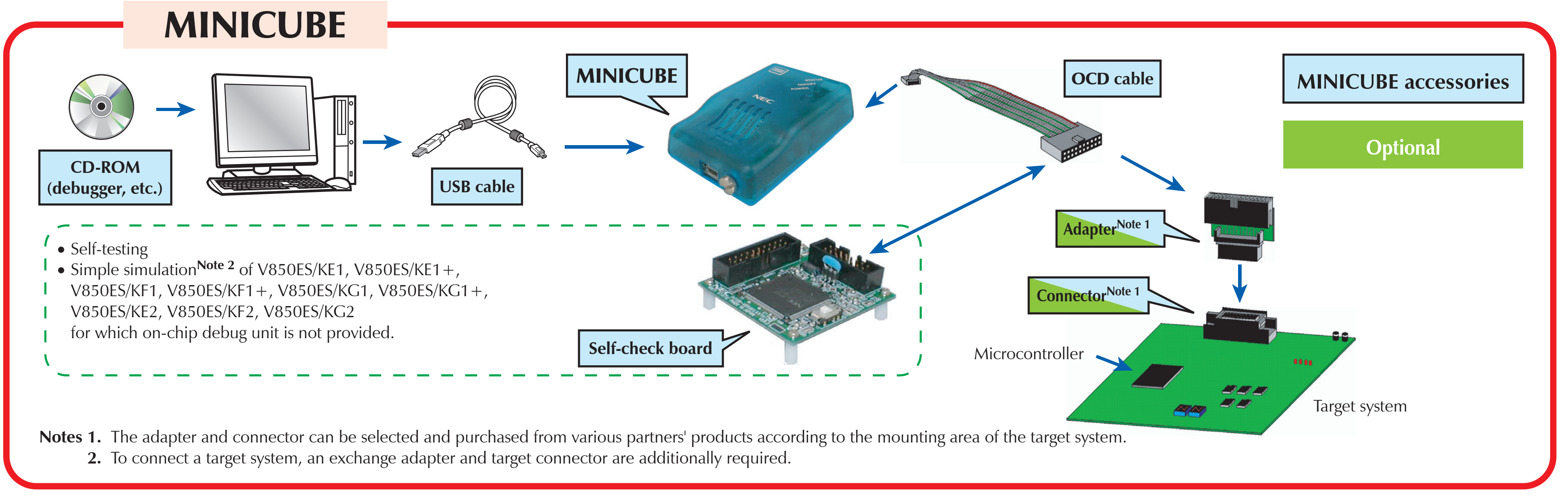

CD-ROM
(debugger, etc.)
USB cable
MINICUBE
OCD cable
MINICUBE accessories
Optional
Adapter^Note 1
Connector^Note 1
Self-check board
Microcontroller
Target system

- Self-testing
- Simple simulation^Note 2 of V850ES/KE1, V850ES/KE1+, V850ES/KF1, V850ES/KF1+, V850ES/KG1, V850ES/KG1+, V850ES/KE2, V850ES/KF2, V850ES/KG2 for which on-chip debug unit is not provided.

Notes 1. The adapter and connector can be selected and purchased from various partners' products according to the mounting area of the target system.
2. To connect a target system, an exchange adapter and target connector are additionally required.

IECUBE

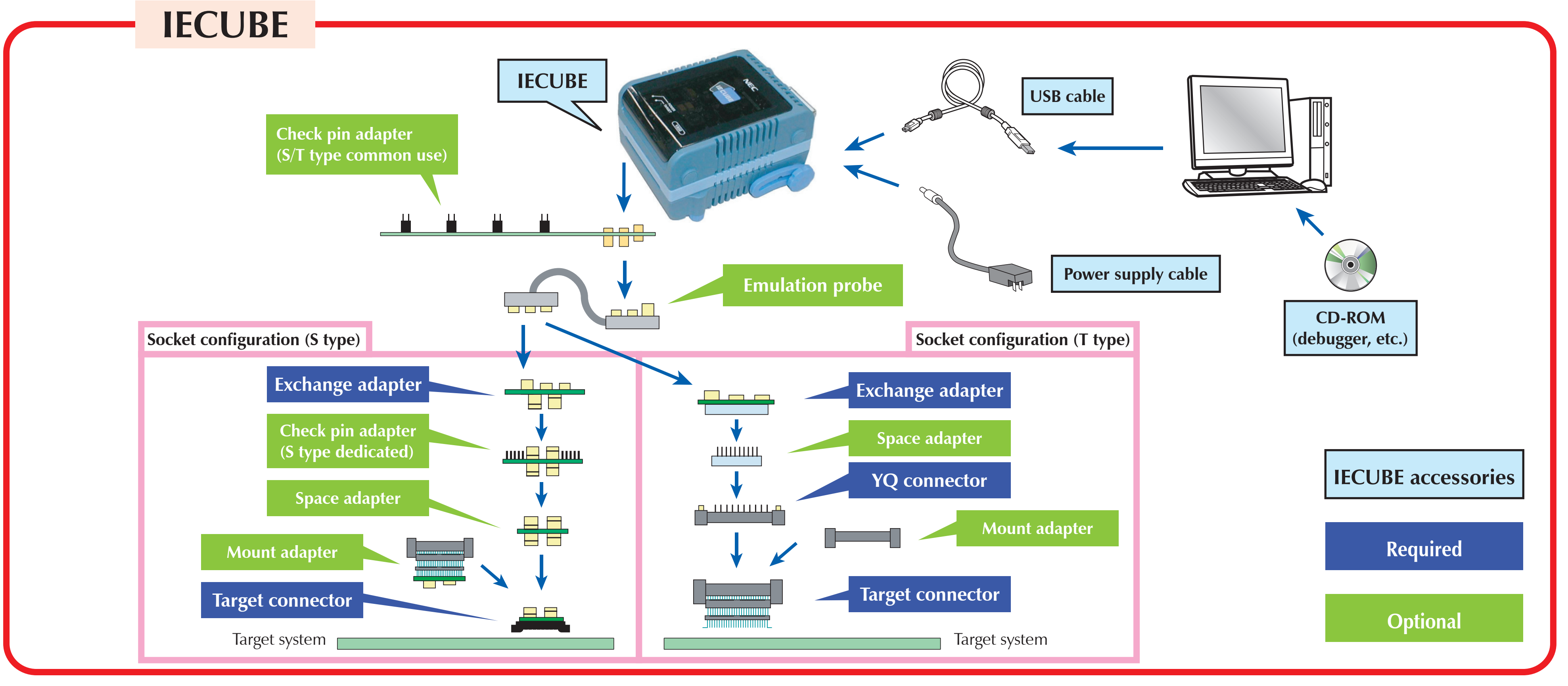

IECUBE
Check pin adapter
(S/T type common use)
USB cable
Emulation probe
Power supply cable
CD-ROM
(debugger, etc.)
Socket configuration (S type)
Exchange adapter
Check pin adapter
(S type dedicated)
Space adapter
Mount adapter
Target connector
Target system
Socket configuration (T type)
Exchange adapter
Space adapter
YQ connector
Mount adapter
Target connector
Target system
IECUBE accessories
Required
Optional

G1 emulator

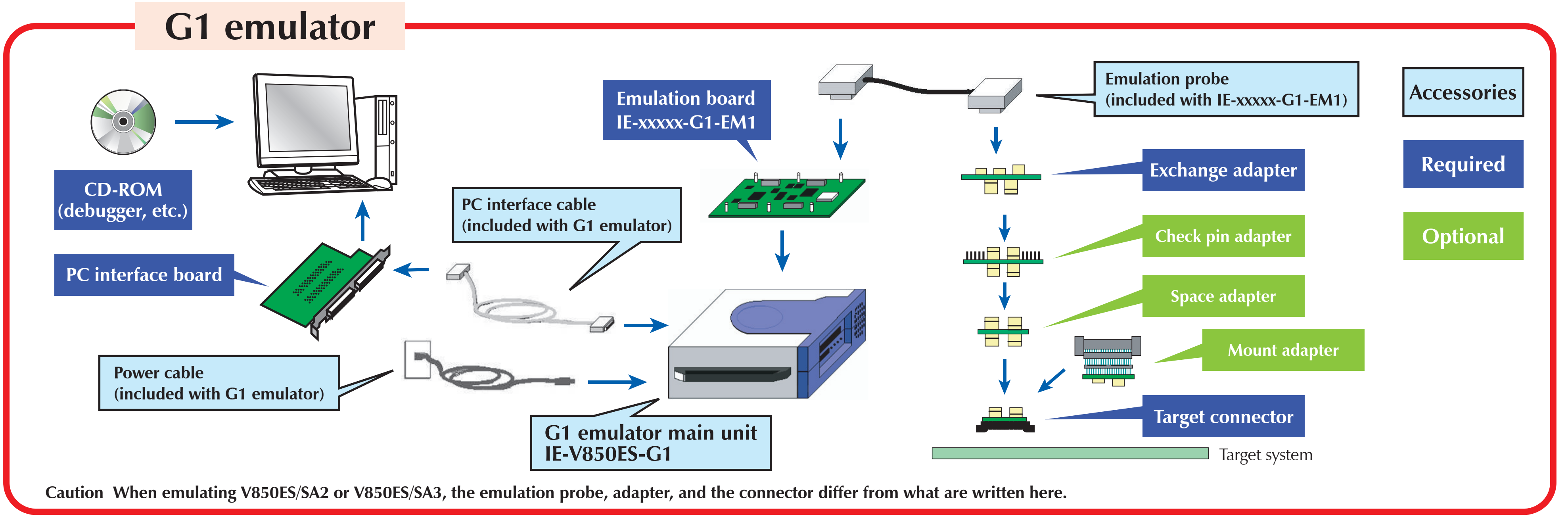

CD-ROM
(debugger, etc.)
PC interface board
Power cable
(included with G1 emulator)
PC interface cable
(included with G1 emulator)
Emulation board
IE-xxxxx-G1-EM1
G1 emulator main unit
IE-V850ES-G1
Emulation probe
(included with IE-xxxxx-G1-EM1)
Exchange adapter
Check pin adapter
Space adapter
Mount adapter
Target connector
Target system
Accessories
Required
Optional

Caution When emulating V850ES/SA2 or V850ES/SA3, the emulation probe, adapter, and the connector differ from what are written here.

MC emulator

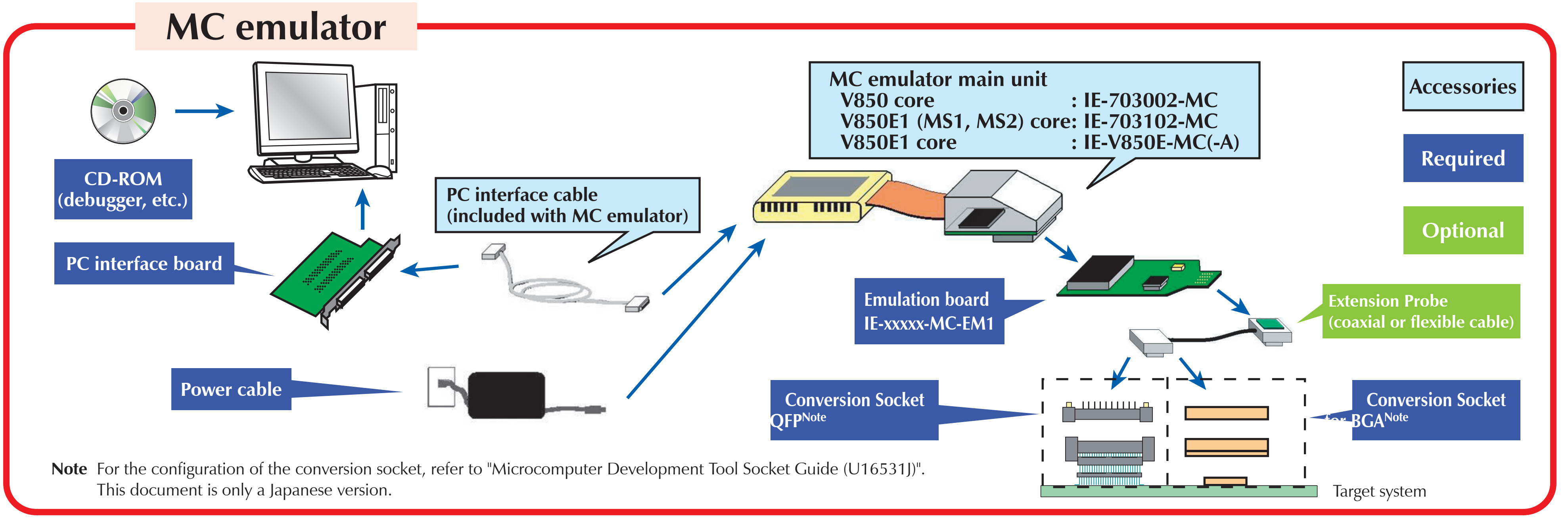

CD-ROM
(debugger, etc.)
PC interface board
Power cable
PC interface cable
(included with MC emulator)
MC emulator main unit
V850 core : IE-703002-MC
V850E1 (MS1, MS2) core: IE-703102-MC
V850E1 core : IE-V850E-MC(-A)
Emulation board
IE-xxxxx-MC-EM1
Extension Probe
(coaxial or flexible cable)
Conversion Socket
QFP^Note
Conversion Socket
for BGA^Note
Target system
Accessories
Required
Optional

Note For the configuration of the conversion socket, refer to "Microcomputer Development Tool Socket Guide (U16531J)".
This document is only a Japanese version.

• SOFTWARE DEVELOPMENT ENVIRONMENT

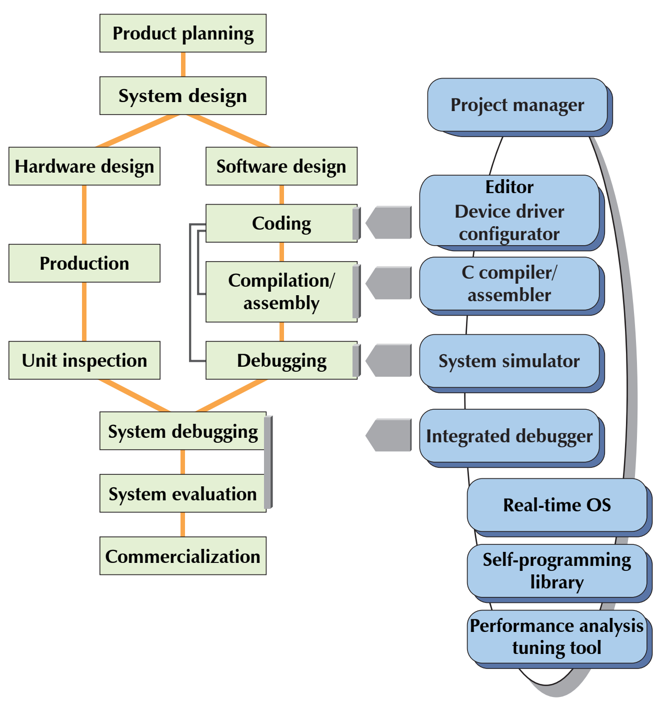

Product planning
System design
Hardware design
Software design
Coding
Compilation/
assembly
Debugging
Production
Unit inspection
System debugging
System evaluation
Commercialization
Project manager
Editor
Device driver
configurator
C compiler/
assembler
System simulator
Integrated debugger
Real-time OS
Self-programming
library
Performance analysis
tuning tool

Type	Name
Software package	SP850
Project manager	PM+
C compiler	CA850
System simulator	SM850, SM+ for V850ES/Hx2, V850ES/Ix2^Note, V850ES/Jx2^Note, V850ES/Kx2^Note
Integrated debugger	ID850, ID850-NW, ID850-QB
Real-time OS	RX850, RX850 Pro, RX850V4
Self-programming library	SelfLib
Performance analysis tuning tool	TW850
Device driver configurator	Applilet for V850ES/Hx2, V850ES/Ix2^Note, V850ES/Jx2, V850ES/Kx2

Note Under development

• Software package
- · Project manager, C compiler, assembler, system simulator (part), integrated debugger, etc. provided on a single CD-ROM disk.

• Project manager
- · Various development tools integrated on Windows.
- · A series of operations, such as editor, builder, and debugger startup, is possible.

• C compiler
- · ANSI C standard compliant.
- · Powerful optimization function.
- · Optimum functions for embedded system development.
- · Multiple utilities.

• System simulator
- · Same GUI design as that of an integrated debugger.
- · Evaluation possible without target prior to target completion.

• Integrated debugger
- · Operates on Windows.
- · Easy to understand and use GUI (Graphical User Interface).
- · Buttons provided for frequency used commands.
- · Can be started up with a simple mouse click.

• Real-time OS
- · μITRON specification compliant.
- · Compact size.
- · Easy program reuse and maintenance.

• Self-programming library
- · The flash memory can be programmed with the microcontroller itself, without using a programmer.
- · Built-in boot swap function for protecting the boot area at power down.

• Performance analysis tuning tool
- · Enables performance estimation, performance prediction, and performance improvement through easy operation.
- · Usable also for the V850E with on-chip cache.

• Device driver configurator
- · The initialization program of troublesome peripheral functions (a timer, UART, etc.) is generated simply.

• FLASH MEMORY PROGRAMMER

Name	PG-FP4		QB-MINI2 (MINICUBE2)	
Object device	All NEC Electronics microcontrollers with flash memory.		Microcontrollers with single-power-supply flash memory supported by IECUBE.	
Sales form	It sells per one piece.		· It sells per one piece. · Included with IECUBE (under planning)	

- **The information in this document is current as of February, 2007. The information is subject to change without notice. For actual design-in, refer to the latest publications of NEC Electronics data sheets or data books, etc., for the most up-to-date specifications of NEC Electronics products. Not all products and/or types are available in every country. Please check with an NEC Electronics sales representative for availability and additional information.**
- No part of this document may be copied or reproduced in any form or by any means without the prior written consent of NEC Electronics. NEC Electronics assumes no responsibility for any errors that may appear in this document.
- NEC Electronics does not assume any liability for infringement of patents, copyrights or other intellectual property rights of third parties by or arising from the use of NEC Electronics products listed in this document or any other liability arising from the use of such products. No license, express, implied or otherwise, is granted under any patents, copyrights or other intellectual property rights of NEC Electronics or others.
- Descriptions of circuits, software and other related information in this document are provided for illustrative purposes in semiconductor product operation and application examples. The incorporation of these circuits, software and information in the design of a customer's equipment shall be done under the full responsibility of the customer. NEC Electronics assumes no responsibility for any losses incurred by customers or third parties arising from the use of these circuits, software and information.
- While NEC Electronics endeavors to enhance the quality, reliability and safety of NEC Electronics products, customers agree and acknowledge that the possibility of defects thereof cannot be eliminated entirely. To minimize risks of damage to property or injury (including death) to persons arising from defects in NEC Electronics products, customers must incorporate sufficient safety measures in their design, such as redundancy, fire-containment and anti-failure features.
- NEC Electronics products are classified into the following three quality grades: "Standard", "Special" and "Specific".
  The "Specific" quality grade applies only to NEC Electronics products developed based on a customer-designated "quality assurance program" for a specific application. The recommended applications of an NEC Electronics product depend on its quality grade, as indicated below. Customers must check the quality grade of each NEC Electronics product before using it in a particular application.
  "Standard": Computers, office equipment, communications equipment, test and measurement equipment, audio and visual equipment, home electronic appliances, machine tools, personal electronic equipment and industrial robots.
  "Special": Transportation equipment (automobiles, trains, ships, etc.), traffic control systems, anti-disaster systems, anti-crime systems, safety equipment and medical equipment (not specifically designed for life support).
  "Specific": Aircraft, aerospace equipment, submersible repeaters, nuclear reactor control systems, life support systems and medical equipment for life support, etc.

The quality grade of NEC Electronics products is "Standard" unless otherwise expressly specified in NEC Electronics data sheets or data books, etc. If customers wish to use NEC Electronics products in applications not intended by NEC Electronics, they must contact an NEC Electronics sales representative in advance to determine NEC Electronics' willingness to support a given application.

(Note)
(1) "NEC Electronics" as used in this statement means NEC Electronics Corporation and also includes its majority-owned subsidiaries.
(2) "NEC Electronics products" means any product developed or manufactured by or for NEC Electronics (as defined above).

M8E 02.11-1

For further information, please contact:

NEC Electronics Corporation
1753, Shimonumabe,
Nakahara-ku,
Kawasaki, Kanagawa 211-8668,
Japan
Tel: 044-435-5111
http://www.necel.com/

[America]

NEC Electronics America, Inc.
2880 Scott Blvd.
Santa Clara, CA 95050-2554,
U.S.A.
Tel: 408-588-6000
800-366-9782
http://www.am.necel.com/

[Europe]

NEC Electronics (Europe) GmbH
Arcadiastrasse 10
40472 Düsseldorf, Germany
Tel: 0211-65030
http://www.eu.necel.com/

Hanover Office
Podbielskistrasse 166 B
30177 Hannover
Tel: 0 511 33 40 2-0

Munich Office
Werner-Eckert-Strasse 9
81829 München
Tel: 0 89 92 10 03-0

Stuttgart Office
Industriestrasse 3
70565 Stuttgart
Tel: 0 711 99 01 0-0

United Kingdom Branch
Cygnus House, Sunrise Parkway
Linford Wood, Milton Keynes
MK14 6NP, U.K.
Tel: 01908-691-133

Succursale Française
9, rue Paul Dautier, B.P. 52
78142 Velizy-Villacoublay Cédex
France
Tel: 01-3067-5800

Sucursal en España
Juan Esplandiu, 15
28007 Madrid, Spain
Tel: 091-504-2787

Tyskland Filial
Täby Centrum
Entrance S (7th floor)
18322 Täby, Sweden
Tel: 08 638 72 00

Filiale Italiana
Via Fabio Filzi, 25/A
20124 Milano, Italy
Tel: 02-667541

Branch The Netherlands
Steijgerweg 6
5616 HS Eindhoven
The Netherlands
Tel: 040 265 40 10

[Asia & Oceania]

NEC Electronics (China) Co., Ltd
7th Floor, Quantum Plaza,
No. 27 ZhiChunLu Haidian
District, Beijing 100083, P.R.
China
TEL: 010-8235-1155
http://www.cn.necel.com/

NEC Electronics Shanghai Ltd.
Room 2511-2512,
Bank of China Tower,
200 Yincheng Road Central,
Pudong New Area, Shanghai P.R.
China P.C:200120
Tel: 021-5888-5400
http://www.cn.necel.com/

NEC Electronics Hong Kong Ltd.
12/F., Cityplaza 4,
12 Taikoo Wan Road, Hong Kong
Tel: 2886-9318
http://www.hk.necel.com/

NEC Electronics Taiwan Ltd.
7F, No. 363 Fu Shing North Road
Taipei, Taiwan, R. O. C.
Tel: 02-8175-9600
http://www.tw.necel.com/

NEC Electronics Singapore Pte. Ltd.
238A Thomson Road,
#12-08 Novena Square,
Singapore 307684
Tel: 6253-8311
http://www.sg.necel.com/

NEC Electronics Korea Ltd.
11F., Samik Lavied'or Bldg., 720-2,
Yeoksam-Dong, Kangnam-Ku,
Seoul, 135-080, Korea
Tel: 02-558-3737
http://www.kr.necel.com/

G06.11'

Document No. U17653EJ4V0SG00 (4th edition)
Date Published February 2007 NS CP(K)

Printed in Japan