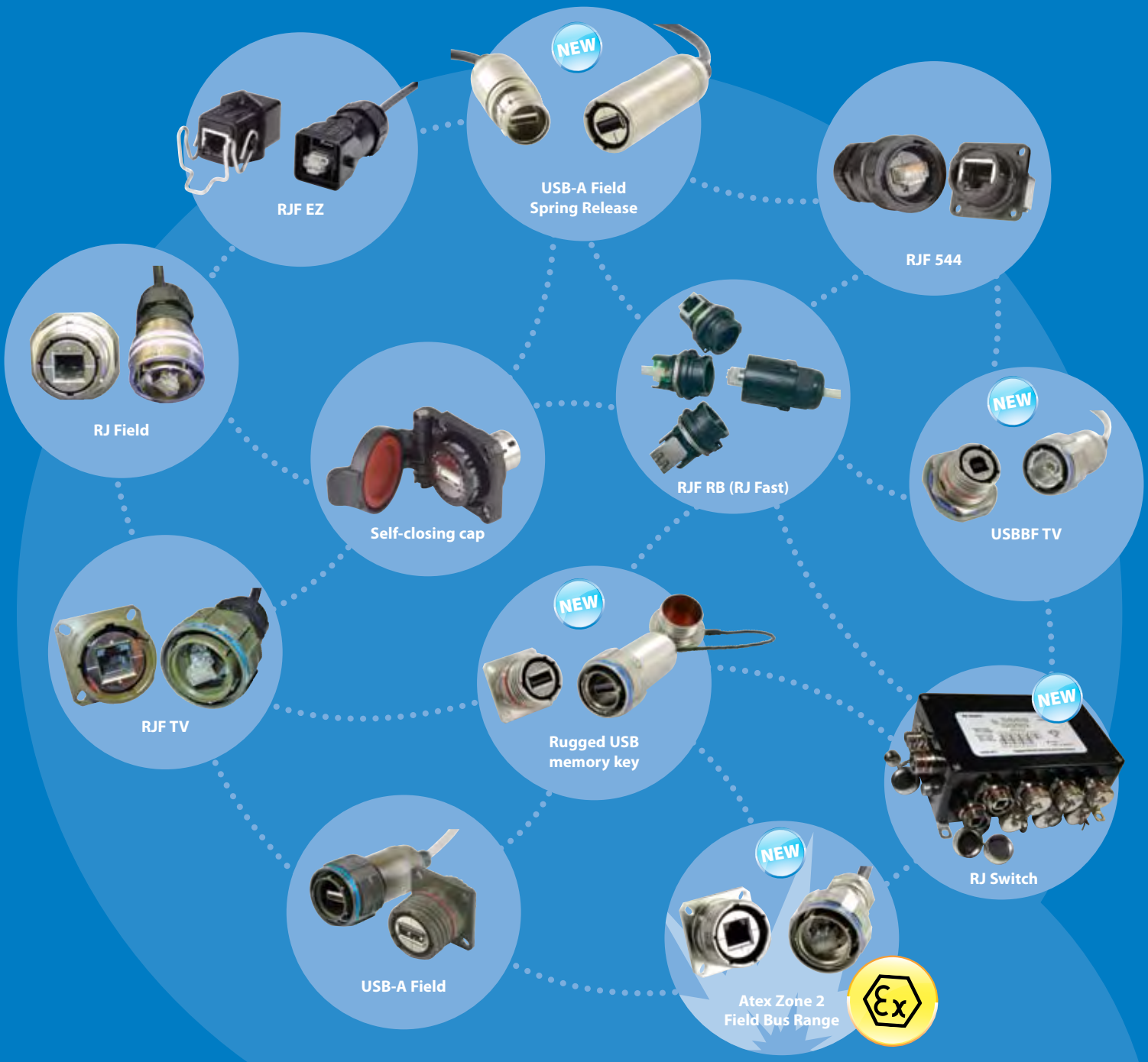

FIELD Series - *catalog*

Reinforced Infocom Connectors for Harsh Environment

RJ45 Field - RJ11 Field - RJ Switch - USB Field - FireWire Field - LC Field - MTRJ field

ELECTRONICA
Amphenol
RJF Series
AWARDED

Amphenol

TABLE OF CONTENTS

Rugged RJ45 Solutions

RJFRB: plastic circular shell - reverse bayonet coupling, IDC & PCB tails receptacles 3
RJF544: plastic circular shell - push pull coupling 6
RJFEZ: plastic rectangular shell - lever coupling 8
RJF: metallic circular shell based on MIL-DTL-26482 H - bayonet coupling 10
RJF - special receptacles: right angle, cable mount inline and PCB tails receptacles 13
RJFTV: metallic circular shell based on MIL-DTL-38999 series III - thread coupling with anti-decoupling device 14
Self Closing Cap for square flange RJFTV receptacles 17
RJFTV - receptacles and plugs with 360° EMI backshells 18
NEW RJFTV - special receptacles: right angle, through bulkhead and PCB tails receptacles 20
RJF-RJFTV Sealed: transversally sealed RJF and RJFTV receptacles 22
RJF-RJFTV Sealed: hermetic RJF and RJFTV receptacles 23
High Reliability Cat5E cable and cordsets 24

Rugged USB-A and USB-B solutions (USB2.0)

USBFTV: rugged USB-A - metallic circular shell based on MIL-DTL-38999 series III - thread coupling with anti-decoupling device 25
USBF TV: Self Closing Cap (SCC Series) 28
USBF TV: Transversally Sealed Receptacle 29
NEW USBFTV memory stick *(based on MIL-DTL-38999 Series III)* 31
NEW USBF memory stick *(bayonnet coupling)* 32
NEW High Reliability USB2.0 cordsets 33
NEW USBFTV SC: Spring Loaded Receptacle 34
USBFTV: special versions: receptacles with 360° EMI backshells - PCB tails receptacles 36
NEW USBBF TV (USB-B): USB Connection System for Harsh Environment 37
NEW USBBF TV: Transversally Sealed Receptacle 39
NEW USBBF: rugged USB-B - plastic circular shell - thread coupling 40

Rugged IEEE1394 solutions

FWFTV: metallic circular shell based on MIL-DTL-38999 series III - thread coupling with anti-decoupling device 41

Rugged RJ45 / USB-A / IEEE1394 receptacles with self closing cap

Self Closing Cap 44

Rugged RJ11/RJ12 solutions

RJ11F: metallic circular shell based on MIL-DTL-26482 H - bayonet coupling 46

Rugged MTRJ and LC (fiber optic) solutions

MTRJF: metallic circular shell based on MIL-DTL-38999 series III - thread coupling with anti-decoupling device 48
LCF: metallic circular shell based on MIL-DTL-38999 series III - thread coupling with anti-decoupling device 50

ATEX

NEW RJFTVX, USBFTVX, RJ11FTVX (RJ45,USB, RJ11/12 explosion proof solutions) 52

Rugged Ethernet Switches

NEW 5 or 9 ports IP30 Switch - Unmanaged, Ring or managed 56
NEW ATEX zone 2 rugged & IP68 sealed ethernet switch 59
5 ports IP68 Switch - Fiber glass reinforced Polyester enclosure - Unmanaged or Ring 60
NEW 9 ports IP68 Switch - Aluminum enclosure with olive drab cadmium plating - Unmanaged or managed - Gigabit 64

RUGGED RJ 45 SOLUTION SELECTION GUIDE

Connectors	Series	Coupling Mechanism	Shape	Material	Specification	Prime Market	Page
	RJF RB	Reverse Bayonet	Circular	Plastic	N/A	Industrial & Telecom	3
	RJF544	Push Pull	Circular	Plastic	N/A	Industrial & Telecom	6
	RJF EZ	Lever	Rectangular	Plastic	N/A	Industrial & Telecom	8
	RJF	Bayonet	Circular	Metal	MIL-DTL-26482	Industrial Mil/Aero	10
	RJF Special	Bayonet	Circular	Metal	MIL-DTL-26482	Industrial Mil/Aero	13
	RJF TV	Thread	Circular	Metal	MIL-DTL-38999 (Series III)	Mil/Aero & Rail Mass Transit	14
	RJF TV Self Closing Cap (SCC)	N/A	N/A	N/A	N/A	Mil/Aero & Rail Mass Transit	17
	RJF TV Receptacles - Plugs with 360° EMI backshells	Thread	Circular	Metal	MIL-DTL-38999 (Series III)	Mil/Aero & Rail Mass Transit	18
	RJF TV Special PCB Stand-Off, Through bulkhead	Thread	Circular	Metal	MIL-DTL-38999 (Series III)	Mil/Aero & Rail Mass Transit	20
	RJF/RJFTV Environmentaly Sealed, Transversally Sealed	Bayonet or Thread	Circular	Metal	MIL-DTL-26482 or MIL-DTL-38999 (Series III)	Mil/Aero & Industrial	22
	RJF/RJFTV Hermetic Receptacles	Bayonet or Thread	Circular	Metal	MIL-DTL-26482 or MIL-DTL-38999 (Series III)	Mil/Aero & Industrial	23

RUGGED USB SOLUTION SELECTION GUIDE

Connectors	Series	Coupling Mechanism	Shape	Material	Specification	Prime Market	Page
	USBFTV (USB-A)	Thread	Circular	Metal	MIL-DTL-38999 (Series III)	Mil/Aero, Rail Mass Transit & industrial	25
	USBF TV Self Closing Cap (SCC Series)	N/A	N/A	N/A	N/A	Mil/Aero, Rail Mass Transit & industrial	28
	USBF TV Transversally Sealed Receptacles	Thread	Circular	Metal	MIL-DTL-38999 (Series III)	Mil/Aero, Rail Mass Transit & industrial	29
	Rugged USBF TV Memory Keys	Thread	Circular	Metal	MIL-DTL-38999 (Series III)	Mil/Aero & industrial	31
	Rugged USB Keys	Bayonet	Circular	Metal	N/A	Mil/Aero & Industrial	32
	USBF SC	Spring release	Circular	Metal	N/A	Mil/Aero & industrial	34
	USBFTV Special 360° EMI, PCB Stand-Off,	Thread	Circular	Metal	MIL-DTL-38999 (Series III)	Mil/Aero, Rail Mass Transit & industrial	36
	USBBFTV (USB-B)	Thread	Circular	Metal	MIL-DTL-38999 (Series III)	Mil/Aero, Rail Mass Transit & industrial	37
	USBBF TV Transversally Sealed Receptacles	Thread	Circular	Metal	MIL-DTL-38999 (Series III)	Mil/Aero, Rail Mass Transit & industrial	39
	USB B Field	Thread	Circular	Plastic	N/A	Industrial & Telecom	40

RUGGED FIREWIRE, RJ11, MTRJ & LC SOLUTION SELECTION GUIDE

Connectors	Series	Coupling Mechanism	Shape	Material	Specification	Prime Market	Page
	FWFTV (FireWire)	Thread	Circular	Metal	MIL-DTL-38999 (Series III)	Mil/Aero & Video	**41**
	Self Closing Cap	Bayonet (for RJ45) N/A (for USB-A, USB-B & IEEE1394)	Circular	Metal	N/A	Industrial & Telecom	**44**
	RJ11F (RJ11)	Bayonet	Circular	Metal	MIL-C-26482	MIL/Aero & Industrial	**46**
	MTRJFTV (MTRJ)	Thread	Circular	Metal	MIL-DTL-38999 (Series III)	Mil/Aero & Rail Mass Transit	**48**
	LCF TV (LC)	Thread	Circular	Metal	MIL-DTL-38999 (Series III)	Mil/Aero & Rail Mass Transit	**50**

RUGGED ATEX ZONE 2 SOLUTION SELECTION GUIDE

Connectors	Series	Coupling Mechanism	Shape	Material	Specification	Prime Market	Page
NEW	ATEX ZONE 2	Thread	Circular	Metal	MIL-DTL-38999 (Series III)	Oil & Gas	**52**

RUGGED ETHERNET SWITCH SOLUTION SELECTION GUIDE

Ethernet Switches	Series	Sealing	Material	Number of ports	Unmanaged	Ring	Managed	Prime Market	Page
	RJS	IP30	Metal & Plastic	5 or 9	x	x	x	Factory Automation, Video, Oil & Gas	**56**
	RJSPCEX	IP68	Plastic	5	x	x		Oil & Gas	**59**
	RJSPC	IP68	Plastic	5	x	x		Factory Automation	**60**
NEW	RJSML/RJSBKN	IP68	Metal	9	x	x	x	Mil/Aero	**64**

SPECIAL CABLE SOLUTION SELECTION GUIDE

Cable & cordset	Description	Availability	Prime Market	Page
	High Reliability Ethernet Cable Cat 5e	**In cordset** 100 m (around 328 ft) 300 m (around 984 ft)	Mil/Aero & Rail Mass Transit	**24**
NEW	High Reliability USB 2.0 Cable	**USB-A Cordset** 300 m (around 984 ft)	Mil/Aero, Rail Mass Transit & Industrial	**33**

RJF RB

Ethernet Connection System for Harsh Environment – Industrial Ethernet

IDC Receptacle

PCB Receptacle

RJFRB allows you to use an Ethernet Class D / Cat. 5e and Class E/Cat 6 connection for 10 BaseT,100 BaseTX or 1000 BaseT networks in harsh environments.
With the patented RJStop® system you can use a standard RJ45 cordset in a protective composite plug which will protect it from shocks, dust and fluids.
No hazardous on-field cabling and grounding!

MAIN CHARACTERISTICS

- Sealed against fluids and dust (IP68)
- Shock, Vibration and Traction resistant
- No cabling operation in field, no tools required
- **Reverse bayonet coupling**
- RJ45 cordset retention in the plug: 70 N in the axis
- Mating cycles: 500 min
- Compatible with cable diameter from 5,5 mm [0.216 in] to 7 mm [0.275 in]

Applications

- Telecom Equipments
- Video Control
- Robotics
- Industrial Process Control
- CNC Machines
- Special Machines
- Motion Control

Environmental Protection

- Sealing: IP68
- Salt Spray > 1000 h
- Fire Retardant / Low Smoke: UL94 V0 and NFF 16102, DIN 5510-2
- Thermal Shock: 5 cycles at - 40°C / +100°C
- Operating Temperature: - 40°C / +85°C

Data Transmission

10 BaseT, 100 BaseTX and 1000 BaseT networks
Cat 5e per TIA/EIA 568B and ClassD per ISO/IEC 11801
Cat6 per TIA/EIA 568B and ClassE per ISO/IEC 11801

Part Number Code

Series **RJF RB**	**RJF RB**	**7**	**1RA**

Shell Type

6:	Composite reverse bayonet Plug, Plastic Gland
7:	Composite jam nut Receptacle

Back Terminations *(For Receptacles only)*

1:	Female RJ45
1RA:	Right angle female RJ45
2:	RJ45 Cordset
3U:	IDC cat6 - unshielded
3F:	IDC cat6 - partial shielding
3S:	IDC cat6 - 100% shielded
5:	Straight PCB

Cordset Length *(For Receptacles with "2" back termination only)*

03 100BTX:	0.3m [11.81 inches]
05 100BTX:	0.5m [19.68 inches]
10 100BTX:	1m [39.37 inches]
15 100BTX:	1.5m [59.05 inches]

Remark: Cabling configuration: 100 BTX = 568B (Ethernet specification)

Examples:
- Plug: RJF RB 6
- Receptacle, female RJ45 Back termination: RJF RB 71
- Receptacle, right angle female RJ45 Back termination: RJF RB 71RA
- Receptacle, 1,5m [59.05"] RJ45 cordset termination: RJF RB 72 15 100BTX

Plug

■ Type 6 Shell with Plastic Gland

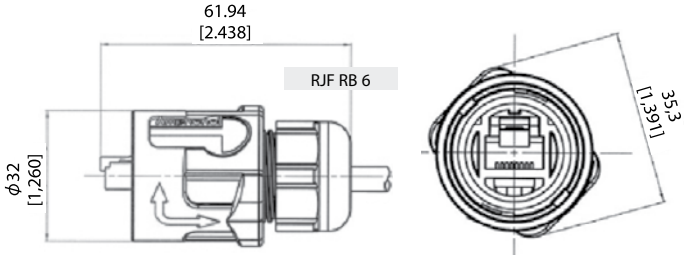

Receptacle

■ Type 1: Female RJ45
(front mounting)

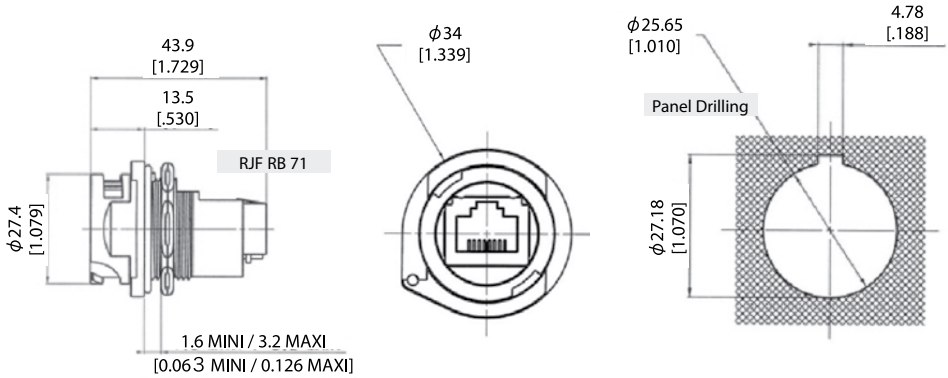

■ Type 1RA: Right Angle Female RJ45
(front mounting)

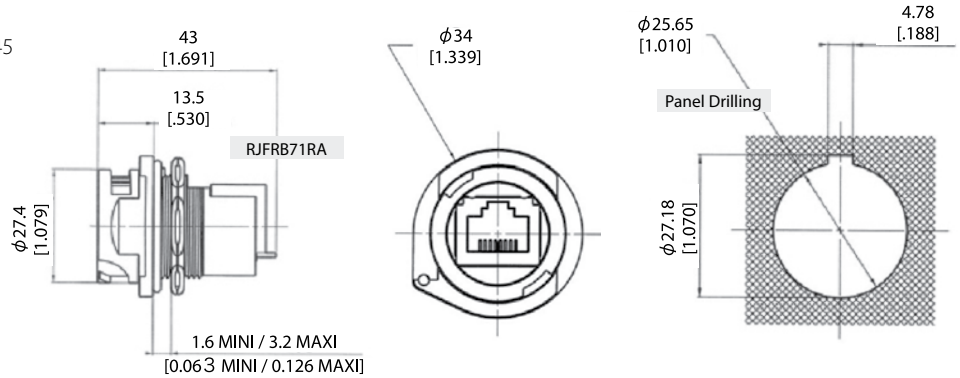

■ Type 2: RJ45 Cordset
(front mounting)

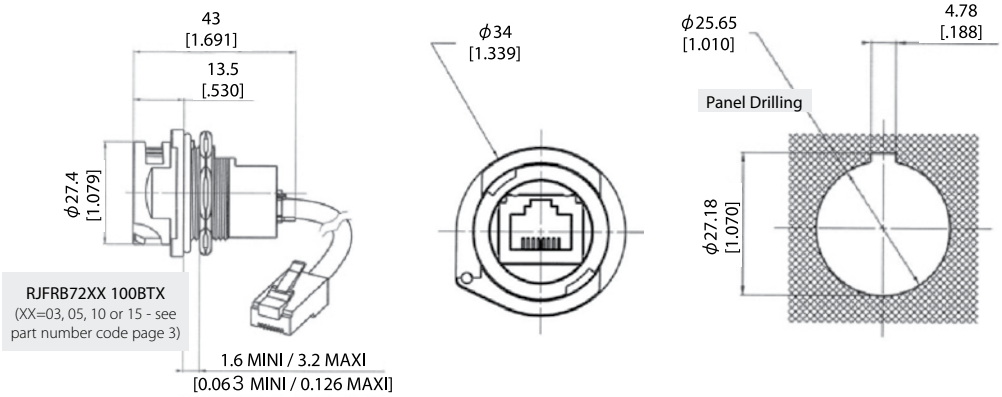

■ Type 3: IDC Cat6 termination
(rear mounting)

Unshielded: **RJFRB73U**
Partial shielding **RJFRB73F**

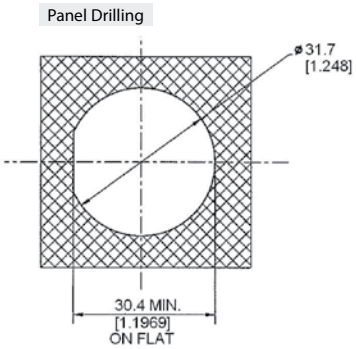

Shielded: **RJFRB73S**

■ Straight PCB termination receptacle:
(rear mounting)

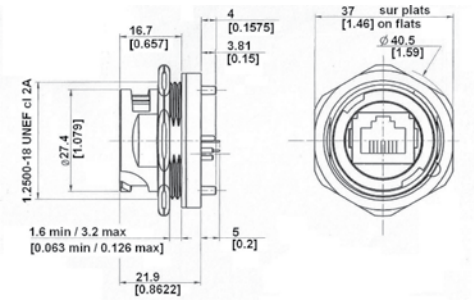

Panel Drilling

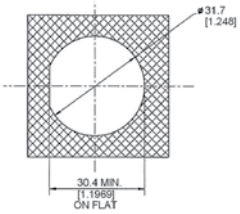

Part number: RJF RB 75

IMPORTANT NOTE
The customer's PCB design will determine the receptacle category.

PCB Drilling RJFRB

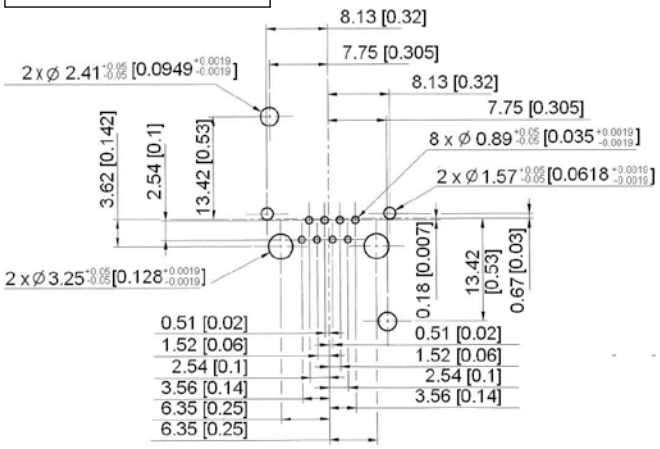

Assembly Instructions

1

2

3

4

5

6

7

8

Accessories

■ **IP68 Dust Caps**

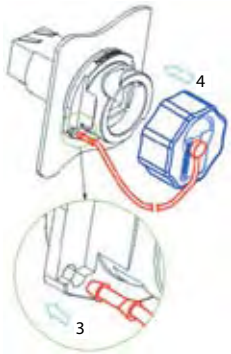

RJF RB C7
Cap for receptacles RJFRB71 / 71RA / 72xxx

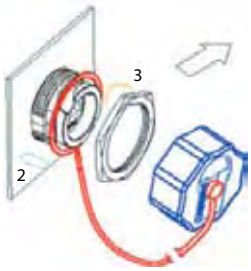

RJF RB C75
Cap for receptacles RJFRB75 and RJFRB73x

RJF 544

Ethernet Connection System for Harsh Environment – Industrial Ethernet

RJF544 allows you to use an Ethernet Class D / Cat. 5e connection for 10 BaseT,100 BaseTX or 1000 BaseT networks in harsh environments:
With the patented RJStop® system you can use a standard RJ45 cordset in a protective composite plug which will protect it from shocks, dust and fluids.
No hazardous on-field cabling and grounding!

Applications

- Telecom Equipment
- Video Control
- Robotics
- Industrial Process Control
- CNC Machines
- Special Machines
- Motion Control
- Tele-maintenance

MAIN CHARACTERISTICS

- Shock, Vibration and Traction resistant
- No cabling operation in field and no tools required
- Sealed against fluids and dust (IP68)
- **Quick Push Pull coupling**
- RJ45 cordset retention in the plug: 100 N in the axis
- Mating cycles: 500 min
- Improved EMI Protection
- Compatible with cable diameter from 5,5 mm [0.216 in] to 13 mm [0.512 in]

Environmental Protection

- Sealing: IP68
- Salt Spray > 1000 h
- Fire Retardant / Low Smoke: UL94 V0 and NFF 16102, DIN 5510-2
- Vibrations: 10 – 500 Hz, 10 g, 3 axes: no discontinuity > 10 nano s.
- Thermal Shock: 5 cycles at - 40°C / +100°C
- Operating Temperature: - 40°C / +85°C

Data Transmission

10 BaseT, 100 BaseTX and 1000 BaseT networks
Cat 5e per TIA/EIA 568B and ClassD per ISO/IEC 11801

Part Number Code

Series **RJField 544 - Push Pull**	**RJF 544**	**2**	**2**	**03 100BTX**

Shell Type
6: Composite Push Pull Plug, Plastic Gland
2: Composite Square Flange Receptacle
2M: Metallized (Ni) Composite Square Flange Receptacle

Back Terminations *(For Receptacles only)*
1: Female RJ45
1RA: Right Angle Female RJ45
2: RJ45 Cordset

Cordset Length *(For Receptacles with "2" Back Termination only)*
03 100BTX: 0.3 meters [11.81 inches]
05 100BTX: 0.5 meters [19.68 inches]
10 100BTX: 1 meter [39.37 inches]
15 100BTX: 1.5 meters [59.05 inches]
00: 8 tinned holes at the rear of the PCB to solder the cable

Remark: Cabling configuration: 100 BTX = 568B (Ethernet specification)

Examples:
- Plug: RJF 544 6
- Square flange receptacle, Female RJ45 Back termination: RJF 544 21
- Metallized Square flange receptacle, Female RJ45 Back termination: RJF 544 2M 1
- Square flange receptacle, 1,5m [59.05"] 100 BTX cordset termination: RJF 544 22 15 100BTX
- Square flange receptacle, solder termination: RJF 544 22 00

Plug

■ Type 6 Shell with Plastic Gland

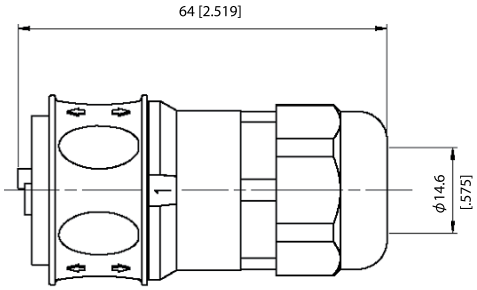

RJF 544 6

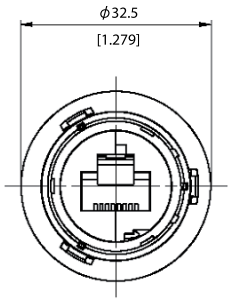

Receptacle

■ Type 2 Shell: Square flange receptacle with 4 mounting holes

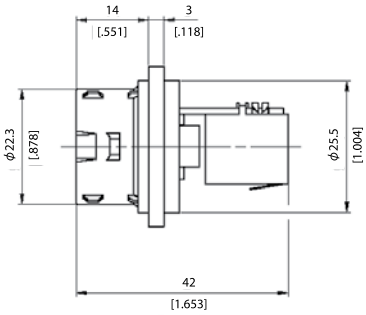

RJF 544 21 & RJF 544 2M1

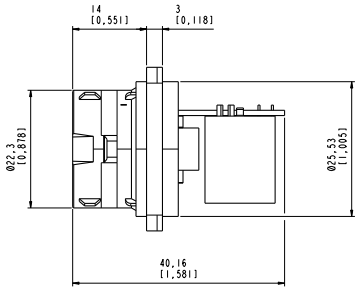

RJF 544 21RA

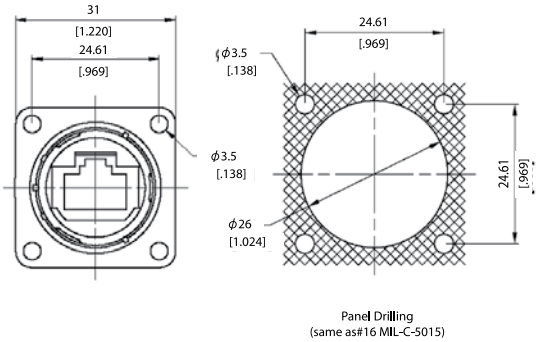

Panel Drilling

Back Terminations

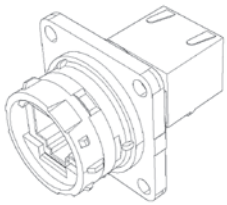

Type1: Female RJ45

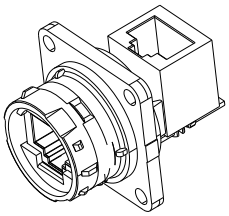

Type1RA: Right Angle Female RJ45

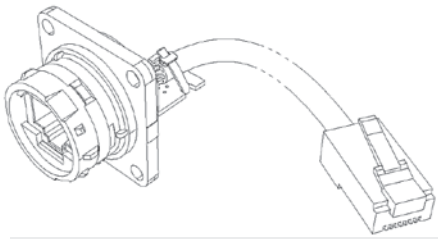

Type2: RJ45 cordset

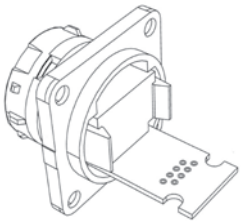

Type 2 - 00: Solder - 8 tinned holes

Notes: - Type 2 without RJ45 plug at the end of the cable is also available: consult factory

Accessories

■ **IP68 Caps**

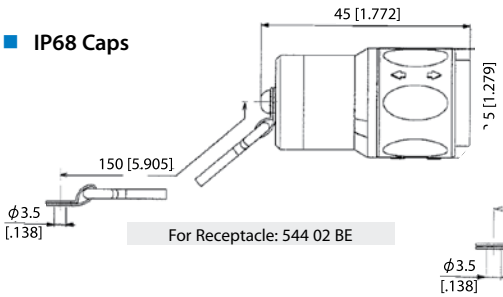

For Receptacle: 544 02 BE

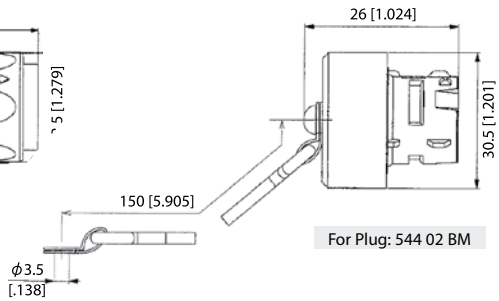

For Plug: 544 02 BM

■ **Panel gasket**
RJF 544 02JE

■ Panel Gasket (Thickness: 0.6mm [.039]): Part No. 544 02 JE
■ Plug Insert removal tool: Part No. 5440 OT 02

RJF EZ

Ethernet Connection System for Harsh Environment – Industrial Ethernet

RJFEZ allows you to use an Ethernet Class D / Cat. 5e connection for 10 BaseT,100 BaseTX or 1000 BaseT networks in harsh environments.
With the patented RJStop® system you can use a standard RJ45 cordset in a protective composite plug which will protect it from shocks, dust and fluids.
No hazardous on-field cabling and grounding!

Applications

- Telecom Equipment
- Video Control
- Robotics
- Industrial Process Control
- CNC Machines
- Special Machines
- Motion Control
- Tele-maintenance

MAIN CHARACTERISTICS

- Sealed against fluids and dust (IP68)
- Shock, Vibration and Traction resistant
- No cabling operation in field and no tools required
- **Quick lever coupling**
- RJ45 cordset retention in the plug: 70 N in the axis
- Mating cycles: 500 min
- Compatible with cable diameter from 5,5 mm [0.216 in] to 7 mm [0.275 in]

Environmental Protection

- Sealing: IP68
- Salt Spray > 1000 h
- Fire Retardant / Low Smoke: UL94 V0 and NFF 16102, DIN 5510-2
- Thermal Shock: 5 cycles at - 40°C / +100°C
- Operating Temperature: - 40°C / +85°C

Data Transmission

10 BaseT, 100 BaseTX and 1000 BaseT networks
Cat 5e per TIA/EIA 568B and ClassD per ISO/IEC 11801

Part Number Code

Series	**RJF EZ**	**2**	**2**	**03 100BTX**
RJField EZ - Lever				
Shell Type				
6:	Composite Lever Plug, Plastic Gland			
2:	Composite Square Flange Receptacle			
Back Terminations *(For Receptacles only)*				
1:	Female RJ45			
2:	RJ45 Cordset			
Cordset Length *(For Receptacles with "2" Back Termination only)*				
03 100BTX:	0.3m [11.81 inches]			
05 100BTX:	0.5m [19.68 inches]			
10 100BTX:	1m [39.37 inches]			
15 100BTX:	1.5m [59.05 inches]			

Remark: Cabling configuration: 100 BTX = 568B (Ethernet specification)

Examples:
- Plug: RJF EZ 6
- Receptacle, Female RJ45 Back termination: RJF EZ 21
- Receptacle, 1,5m [59.05"] 100 BTX cordset termination: RJF EZ 22 15 100BTX

Plug

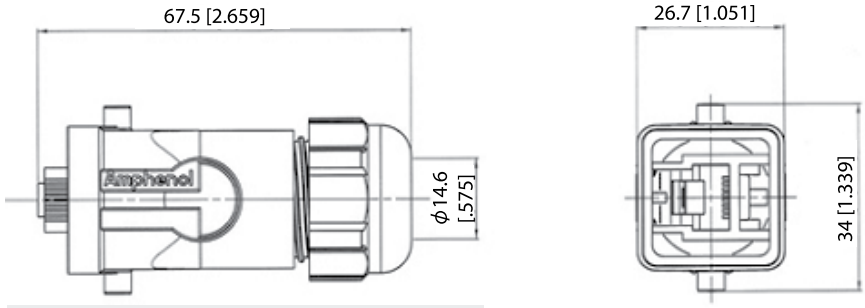

RJF EZ 6

Receptacle

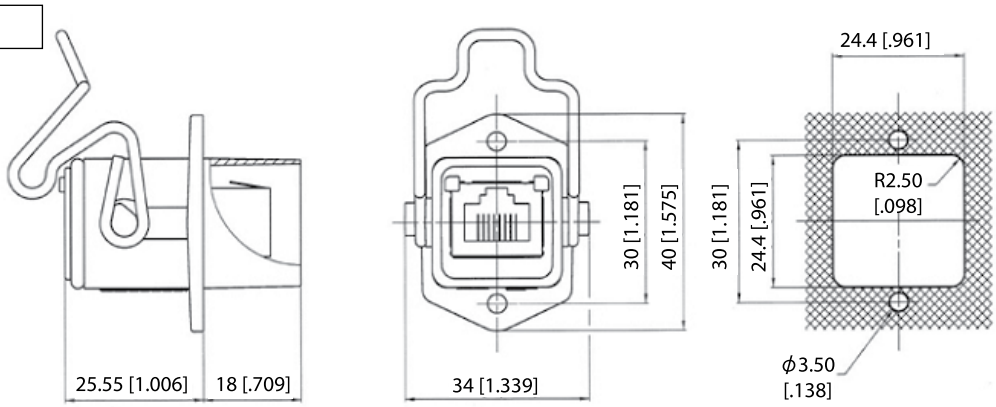

RJF EZ 2

Panel Drilling

Back Terminations

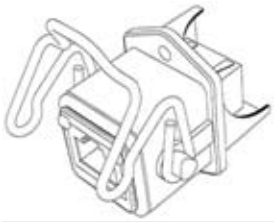

Type 1: Female RJ45

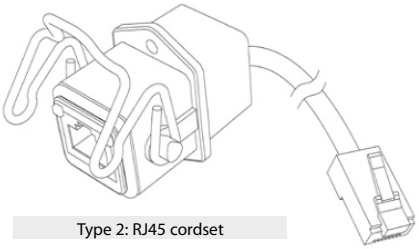

Type 2: RJ45 cordset

Notes: Type 2 without RJ45 plug at the end of the cable is also available: consult factory

Assembly Instructions

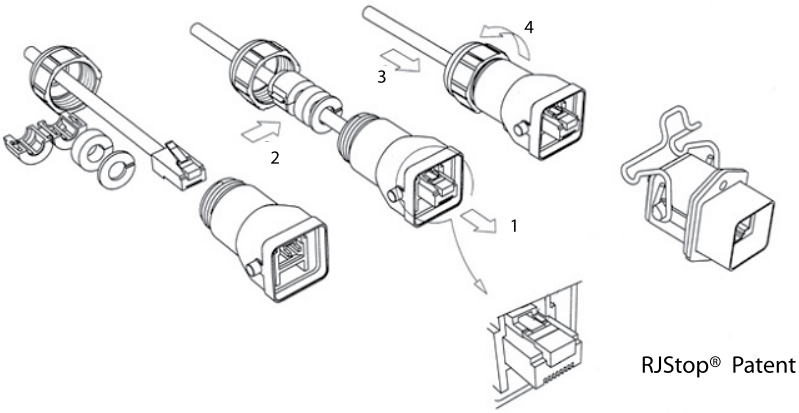

RJStop® Patent

Accessories

- **IP68 Dust Caps**
  For Plugs: **Not available**
  For Receptacles: **RJF EZ BE**

- **Panel Gasket**
  Thickness: 1 mm [.039]
  Part No. RJF EZ JE

RJF

Ethernet Connection System for Harsh Environment – Industrial Ethernet

RJF allows you to use an Ethernet Class D / Cat. 5e connection for 10 BaseT,100 BaseTX or 1000 BaseT networks in harsh environments:
With the patented RJStop®system you can use a standard RJ45 cordset in a metallic plug which will protect it from shocks, dust and fluids.
No hazardous on-field cabling and grounding!

MAIN CHARACTERISTICS

- **Bayonet coupling** ("Audible & Visual" coupling signal)
- **Robust metallic shells based on MIL-DTL-26482 H**
- RJ45 cordset retention in the plug: 100 N in the axis
- Mating cycles: 500 min
- Sealed against fluids and dust (IP68)
- Shock, Vibration and Traction resistant
- No cabling operation in field and no tools required
- Mechanical Coding / Polarization (4 positions)
- Compatible with cable diameter from 5,5 mm [0.216 in] to 13 mm [0.512 in]

Applications

- Robotics
- Industrial Process Control
- CNC Machines
- Special Machines
- Oil & Gas
- Motion Control
- Data Acquisition and Transmission in Harsh Environment
- Tele-maintenance

Data Transmission

10 BaseT, 100 BaseTX and 1000 BaseT networks Cat 5e per TIA/EIA 568B and ClassD per ISO/IEC 11801

Environmental Protection

Sealing:	IP68
Salt Spray:	48 h with Nickel plating > 96 h with black coating > 500 h with Oliv Drab Cadmium
Fire Retardant/Low Smoke:	UL94 V0 and NF F 16 101 & 16 102
Vibrations:	10 – 500 Hz, 10 g, 3 axes: no discontinuity > 10 nano s.
Shocks:	IK06: weight of 250 g drop from 40 cm [15.75 in] onto connectors (mated pair)
Humidity:	21 days, 43°C, 98% humidity
Thermal Shock:	5 cycles at - 40°C / +100°C
Temperature Range:	- 40°C / +85°C

Part Number Code

Series RJField	RJF	2	2	B	03 100BTX

Shell Type

6:	Plug, Plastic Gland
6M:	Plug, Metal Gland
2:	Square Flange Receptacle
2PE:	Square Flange Receptacle, IP68 backshell, Plastic gland
2PEM:	Square Flange Receptacle, IP68 backshell, Metal gland
7:	Jam Nut Receptacle
7PE:	Jam Nut Receptacle, IP68 backshell, Plastic gland
7PEM:	Jam Nut Receptacle, IP68 backshell, Metal gland
2SA, 7SA:	Transversally sealed receptacle (unmated) see page 22

Back Terminations *(For Receptacles only)*

1:	Female RJ45
1RA:	Right Angle Female RJ45
2:	RJ45 Cordset

Shell Finishes

B:	Black Coating - ROHS compliant
N:	Nickel *(Note: with this version, the inserts are metallized)* - ROHS compliant
G:	Olive Drab Cadmium *(Note: with this version, the inserts are metallized)*

Cordset Length *(For Receptacles with "2" Back Termination only)*

03 100 BTX:	0.3m *[11.81 inches]*
05 100 BTX:	0.5m *[19.68 inches]*
10 100 BTX:	1m *[39.37 inches]*
15 100 BTX:	1.5m *[59.05 inches]*
00:	8 tinned holes at the rear of the PCB to solder the cable

Remark: Cabling configuration: 100 BTX = 568B (Ethernet specification)

Examples:
- Nickel plug: RJF 6 N
- Black square flange receptacle, female RJ45 back termination: RJF 2 1 B
- Olive drab cadmium jam nut receptacle, 1.5m [59.05"] 100 BTX cordset termination: RJF 7 2 G 15 100BTX
- Black in line square flange receptacle, 30cm [11.81"] 100BTX cordset termination: RJF 2PE 2 B 03 100BTX
- Nickel jam nut receptacle, solder termination: RJF 72 N 00

Plug:

■ Shell type 6 with Plastic or Metal Gland

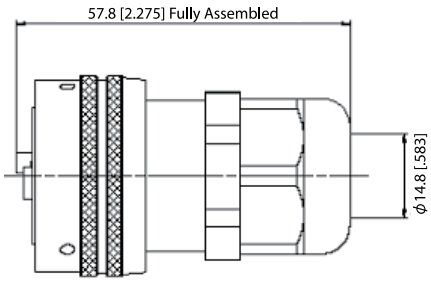

RJF 6 X

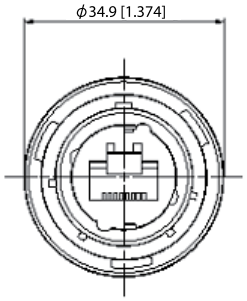

Receptacles:

■ Square flange receptacle • 4 mounting holes: Shell type 2

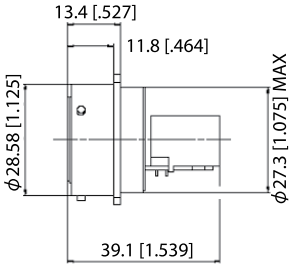

RJF 21 X (Straight Female RJ45)

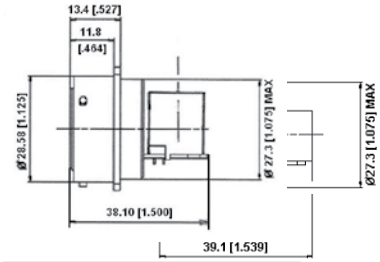

RJF 21 RA X (Right Angle Female RJ45)

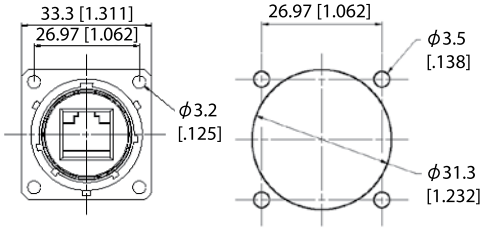

Panel Drilling

■ Jam nut receptacle • Hexagonal Nut mounting: Shell type 7

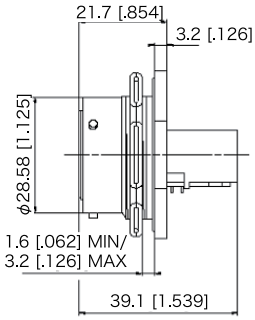

RJF 71 X (Straight Female RJ45)

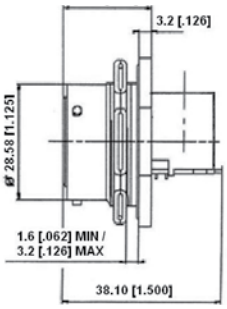

RJF 71 RA X (Right Angle Female RJ45)

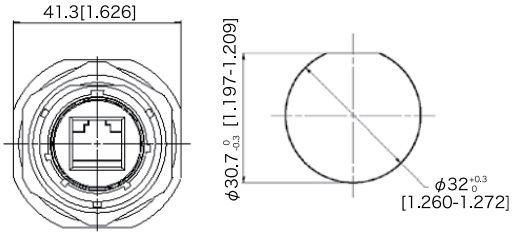

Panel Drilling

■ Receptacles with IP68 backshell: • Shell type 2PE and 7PE with Plastic or Metal Gland

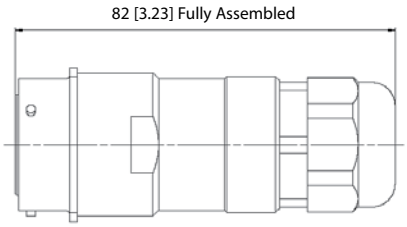

RJF 2PE/2PEM

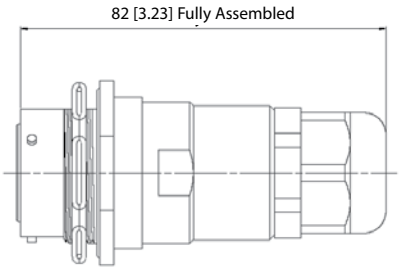

RJF 7PE/7PEM

Back Terminations:

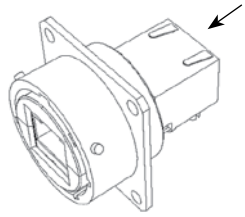

Type 1: Female RJ45

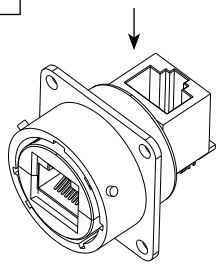

Type 1RA: Right Angle Female RJ45

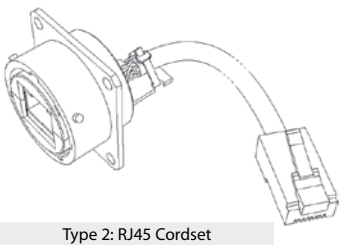

Type 2: RJ45 Cordset

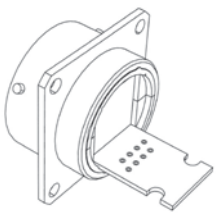

Type 2 - 00: Solder - 8 tinned holes

Notes: • Type 2 without RJ45 plug at the end of the cable is also available: consult factory

Universal: Can be used with all standard RJ45 Cat.5e cordset brands

Assembly instructions

1. Push down the RJ45 cordset latch, and fix it inside the insert
2. Press in and click the other part of the insert
3. Insert in the metallic housing

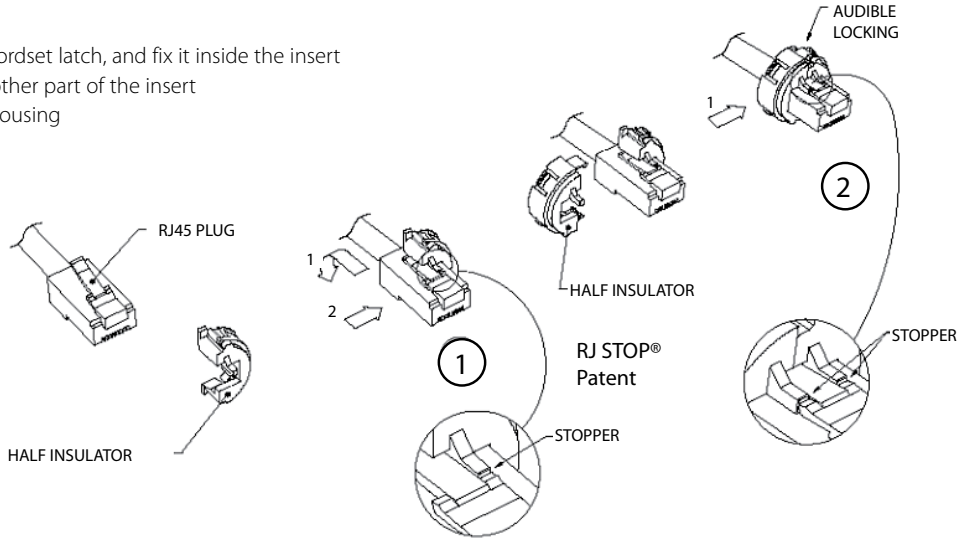

Easy and Safe: No field cabling tools required

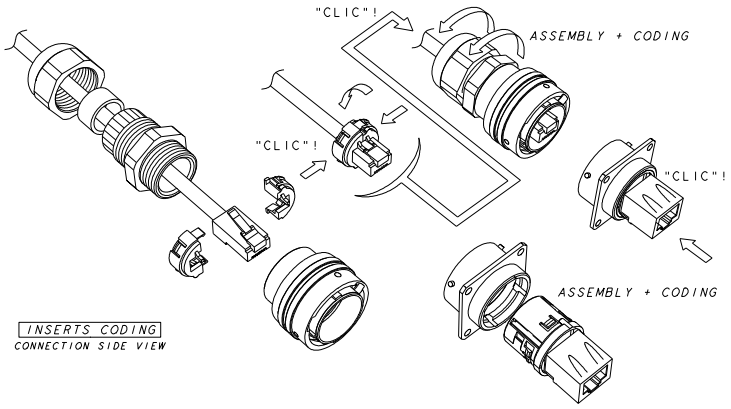

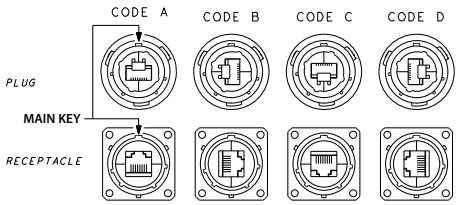

Accessories:

■ **Metallic cap**

	RJFC	2	B
Connector Type **6:** Plug **2:** Square Flange Receptacle **7:** Jam Nut Receptacle			
Finishes **B:** Black Coating - ROHS compliant **N:** Nickel - ROHS compliant **G:** Olive Drab Cadmium			

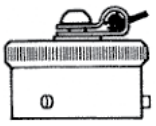

Plug Cap

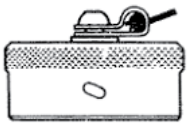

Receptacle Cap

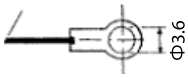

Square Flange type "2"

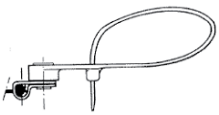

Plug Cap end type "6"

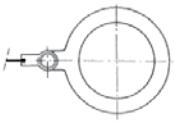

Jam nut receptacle type "7"

■ **Panel gasket for square flange « 2 »thickness: 0,6 mm – P/N: JE 18**

■ **Insert removal tool for receptacle and plug P/N = RJF ODE**

RJF

Special receptacles: cable mount inline & PC tails

Inline Cable Mount Receptacles

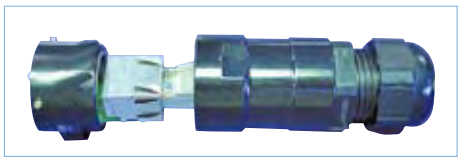

Inline receptacles allow you to make cable extensions in the field by using them with rugged RJFied series plugs.

PART NUMBERS:

Plastic Gland

Black coating: **RJF2PEWF1B**
Nickel plating: **RJF2PEWF1N**
Olive Drab Cadmium plating: **RJF2PEWF1G**

Metallic Gland

Black coating: **RJF2PEMWF1B**
Nickel plating: **RJF2PEMWF1N**
Olive Drab Cadmium plating: **RJF2PEMWF1G**

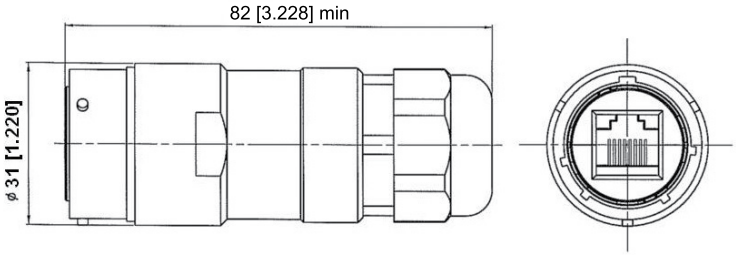

PC Tails Receptacles

These receptacles can be soldered directly on your PCB. A compound insures a transversal sealing and good performance in high vibration environments. They can be connected with rugged RJField series plugs.

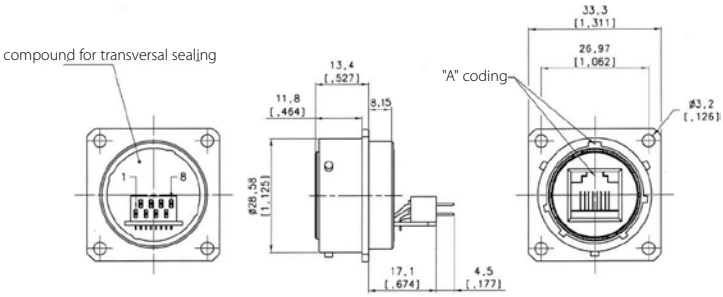

PCB LAYOUT – SOLDER FACE VIEW

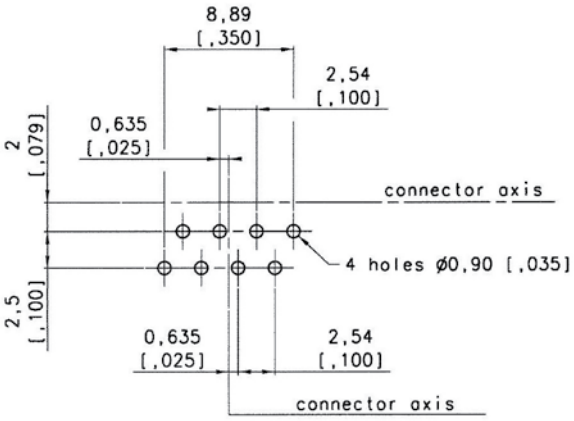

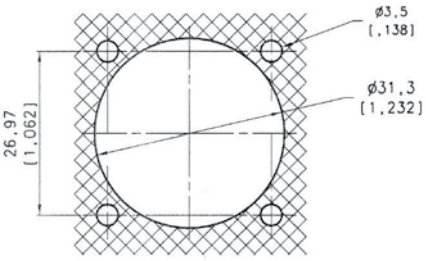

Panel Drilling

PART NUMBERS:

Note:

1. Platings available: **"B":** black coating • **"N":** nickel plating • **"G":** olive drab cadmium plating
2. As these receptacles are compounded, coding position has to be specified in the P/N.

See examples hereunder

Examples:

Square flange receptacle – black coating – coding A: **RJF2S<u>A</u>5B**
Square flange receptacle – nickel plating – coding C: **RJF2S<u>C</u>5N**
Square flange receptacle – olive drab cadmium plating – coding D: **RJF2S<u>D</u>5G**

MAIN KEY

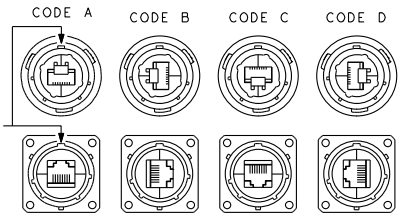

RJF TV

Ethernet Connection System for Harsh Environment

RJFTV allows you to use an Ethernet Class D / Cat. 5e connection for 10 BaseT, 100 BaseTx or 1000 BaseT networks in harsh environments.
With the patented RJStop system you can use a standard RJ45 cordset in a metallic plug which will protect it from shocks, dust and fluids.
No hazardous on-field cabling and grounding!

MAIN CHARACTERISTICS

- Sealed against fluids and dusts (IP68)
- Shock, Vibration and Traction resistant
- No cabling operation in field and no tools required
- Mechanical Coding / Polarization (4 positions)
- Improved EMI protection
- **Tri Start Thread coupling mechanism (MIL-DTL-38999 series III type) with anti-decoupling device**
- **Robust metallic shells**
- RJ45 cordset retention in the plug: 100 N in the axis
- Mating cycles: 500 min
- Compatible with cable diameter from 5,5 mm [0.216 in] to 13 mm [0.512 in]

Applications

- Data Acquisition and Transmission in harsh environment
- Railways
- Radars
- Shelters
- Battlefield Communication
- Systems
- Navy

Data Transmission

10 BaseT, 100 BaseTX and 1000 BaseT networks Cat 5e per TIA/EIA 568B and ClassD per ISO/IEC 11801

Environmental Protection

- Sealing: IP68
- Salt Spray: 48 h with Aluminium shell - Nickel plating
  > 500 h with Aluminium shell - Olive Dran Cadmium plating
  1000h with Marine bronze shell
- Fire Retardant / Low Smoke: UL94 V0 and NF F 16 101 & 16 102
- Vibrations: 10 – 500 Hz, 10 g, 3 axes: no discontinuity > 10 nano s.
- Compounded versions tested per NAS 1599 (5-3000 Hz, 20g, 12h)
- Shocks: IK06: weight of 250 g drop from 40 cm [15.75 in] onto connectors (mated pair)
- Humidity: 21 days, 43°C, 98% humidity
- Thermal Shock: 5 cycles at - 40°C / +100°C
- Temperature Range: - 40°C / +85°C

Part Number Code

Series RJ Field TV	RJF TV	2	2	G	03 100 BTX

Shell Type

6:	Plug with Plastic gland
6M:	Plug with Metal gland
2:	Square Flange Receptacle
2PE:	Square Flange Receptacle, IP68 backshell, Plastic gland
2PEM:	Square Flange Receptacle, IP68 backshell, Metal gland
7:	Jam Nut Receptacle
7PE:	Jam Nut Receptacle, IP68 backshell, Plastic gland
7PEM:	Jam Nut Receptacle, IP68 backshell, Metal gland
2SA, 7SA:	Transversally sealed receptacle (unmated) see page 22

Back Terminations *(Receptacles only)*

1:	Female RJ45
1RA:	Right Angle Female RJ45
2:	RJ45 Cordset

Shells material & Finish

N:	Aluminium shell - nickel plating (receptacle inserts are metallized) - ROHS compliant
G:	Aluminium shell - olive drab cadmium plating (receptacle inserts are metallized)
BZ:	Marine bronze shell (receptacle inserts are metallized) - ROHS compliant

Cordset Length *(type 2 back termination only)*

03 100 BTX:	0.3m [11.81 inches]
05 100 BTX:	0.5m 19.68 inches]
10 100 BTX:	1m [39.37 inches]
15 100 BTX:	1.5m [59.05 inches]
00:	8 tinned holes at the rear of the PCB to solder the cable

Remark: Cabling configuration: 100 BTX = 568B (Ethernet specification)

Examples:
- Olive Drab Cadmium plug with plastic gland: RJF TV 6G
- Olive Drab Cadmium Jam Nut Receptacle, female RJ45 back termination: RJF TV 71G
- Nickel Jam Nut Receptacle, 1,5 m 100 BTX cordset back termination: RJF TV 72N 15 100BTX
- Olive Drab Cadmium in line Square Flange Recept., 0,3 m 100 BTX cordset back termination: RJF TV 2PE 2 G 03 100BTX
- Nickel Jam Nut Receptacle Solder termination 8 tinned holes: RJF TV 22 N 00

Plug:

■ Shell type 6 with Plastic or Metal Gland

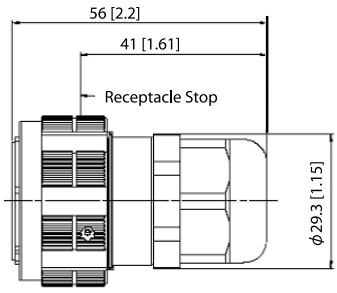

RJF TV 6 X

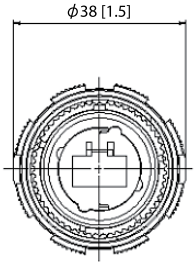

Receptacles:

■ Square flange receptacle • 4 mounting holes: Shell type 2

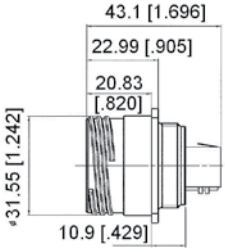

RJFTV 21 X (Straight Female RJ45)

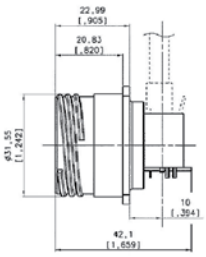

RJFTV 21 RA X (Right Angle Female RJ45)

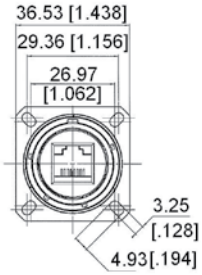

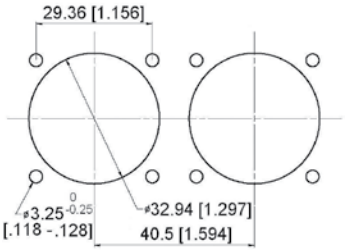

Panel Drilling

■ Jam nut receptacle • Hexagonal Nut mounting: Shell type 7

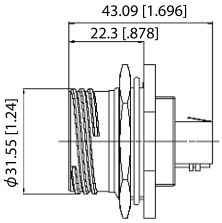

RJFTV 71 X (Straight Female RJ45)

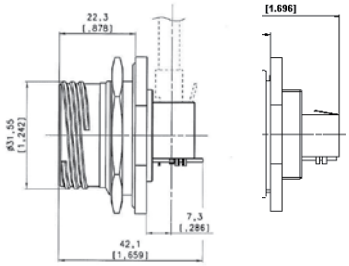

RJFTV 71 RA X (Right Angle Female RJ45)

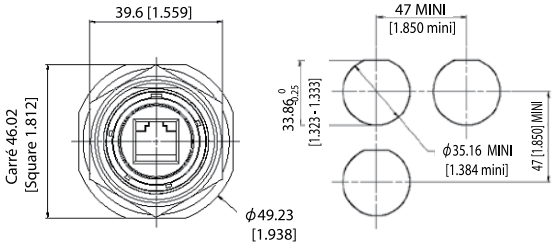

Panel Drilling

■ Receptacles with IP68 backshell: • Shell type 2PE and 7PE with Plastic or Metal Gland

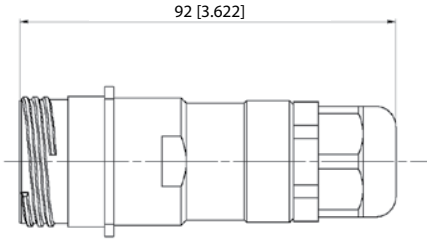

RJF TV 2PE/2PEM/7PE/7PEM

Back Terminations

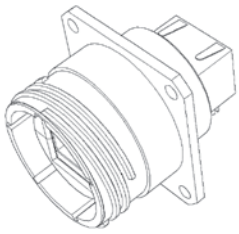

Type 1: Female RJ45

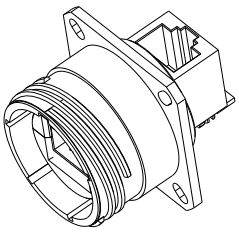

Type 1RA: Right Angle Female RJ45

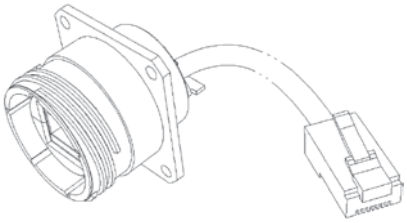

Type 2: RJ45 Cordset

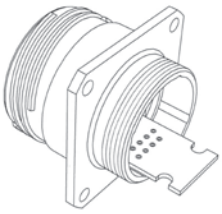

Type 2 - 00: Solder - 8 tinned holes

Notes Type 2 without RJ45 plug at the end of the cable is also available: consult factory

Assembly instructions

Insert Codings

CONNECTION SIDE VIEW

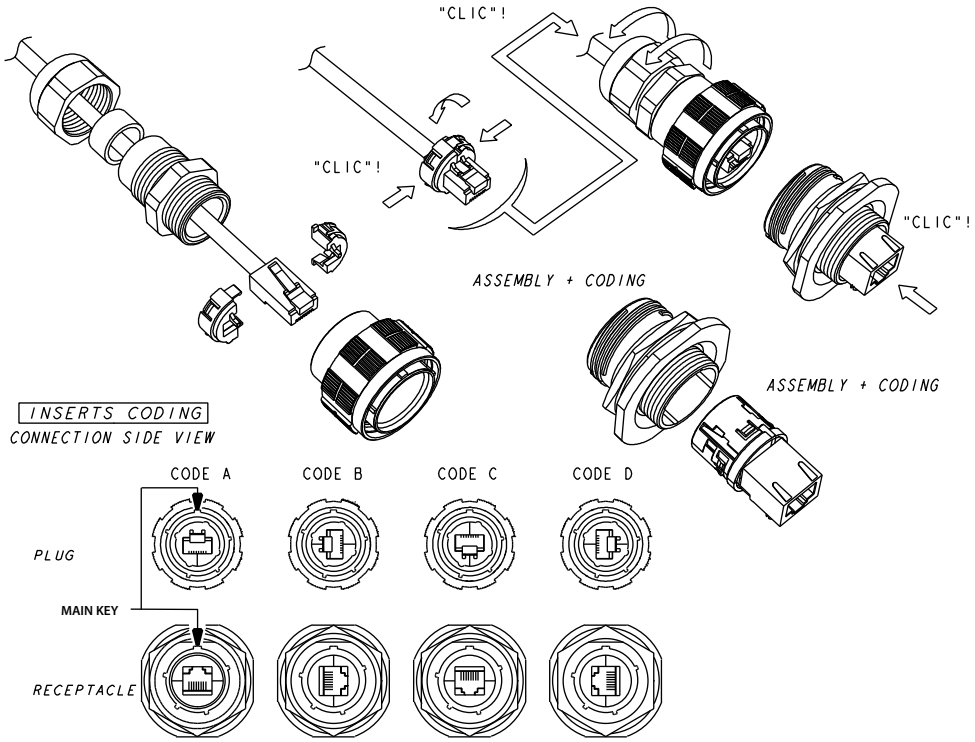

Accessories

■ **Metallic Caps**

RJFTVC	2	G
Connector Type **6:** Plug **2:** Square Flange Receptacle **7:** Jam Nut Receptacle		
Shell Material & finish **N:** Aluminium shell - nickel plating - ROHS compliant **G:** Aluminium shell - olive drab cadmium plating **BZ:** Marine bronze shell - ROHS compliant		

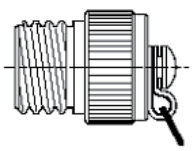

Plug Cap

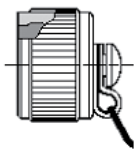

Receptacle Cap

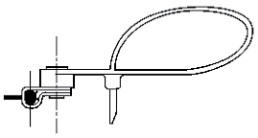

Plug Cap end

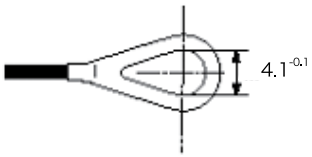

Square flange receptacle cap end

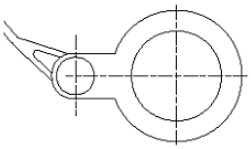

Jam Nut receptacle cap end

■ **Panel Gasket for square flange receptacle (Thickness: 0,8 mm [.031]): JE19**

■ **Insert removal tool: RJF ODE**

RJF TV

Self Closing Cap (SCC Series)

This Self Closing cap automatically protects the RJF TV square flange receptacle (MIL-DTL-38999 type), protecting your system from dust and water projection. A spring automatically closes the upper part of the cap when the RJF TV plug is removed from the receptacle.

IMPORTANT NOTE
Metal Self Closing cap are sold separately (without receptacle)

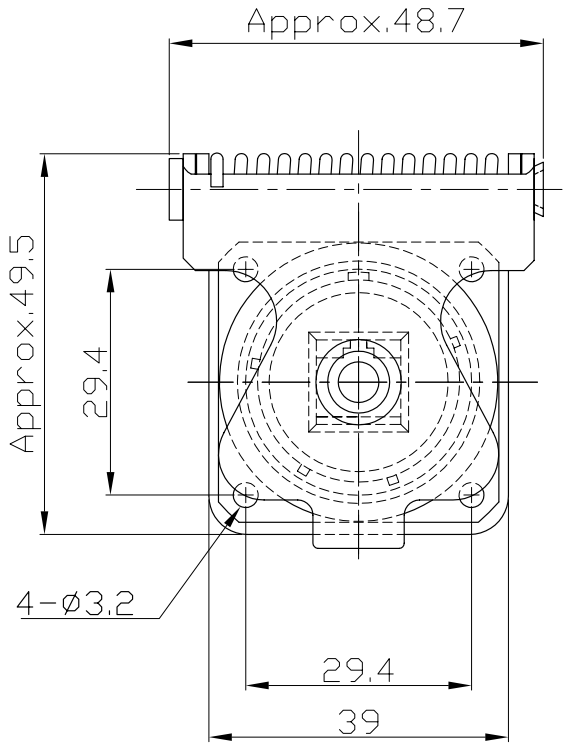

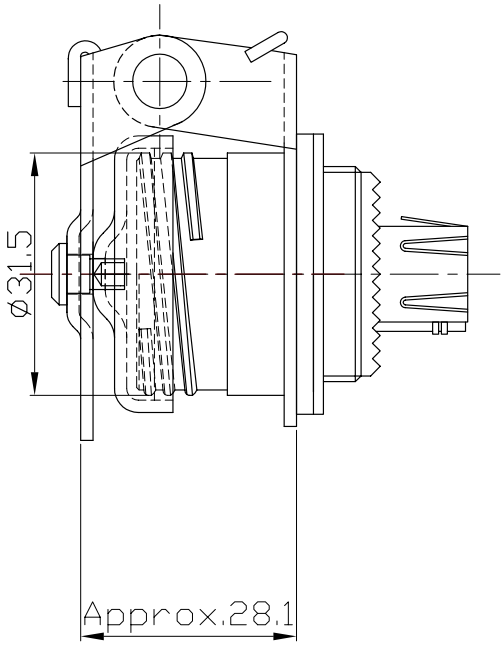

- **Panel Gasket for square flange receptacle (Thickness: 0,8 mm [.031]):**

PART NUMBER: JE19

PART NUMBER:

Self closing cap only: **RJFTVSCC**

Remark: Compatible only with RJFTV square flange receptacle type: RJFTV**2**XXX (see page 14)

RJFTV

Receptacles - Plugs with 360° EMI backshells

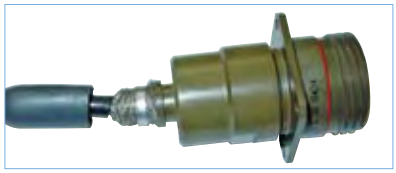

RJFTV series receptacles and plugs with EMI backshells provide a solution with 360° shielding: same protection than the one proposed by standard MIL-DTL-38999 series III connectors. With those solutions we recommend using our reinforced and double shielded cat5E cable, see page 24.

Square Flange Receptacle *Straight Backshell*

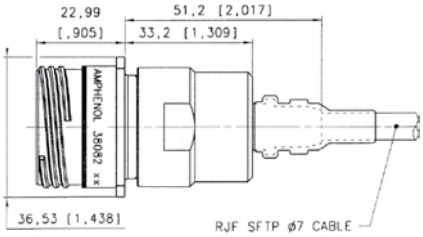

PART NUMBERS:
Olive Drab Cadmium Plating: **Kit38082**
Nickel Plating: **Kit38082NI**

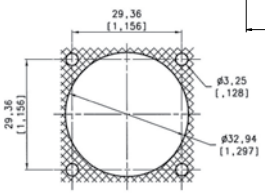

Panel Drilling

Square Flange Receptacle *Right Angle Backshell*

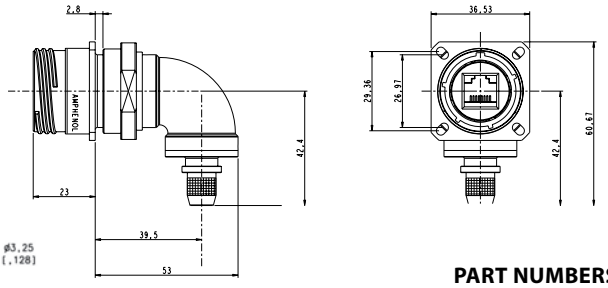

PART NUMBERS:
Olive Drab Cadmium Plating: **Kit40791**
Nickel Plating: **Kit40791NI**

Kit38082, Kit38082NI, Kit 40791 & Kit 40791NI include:

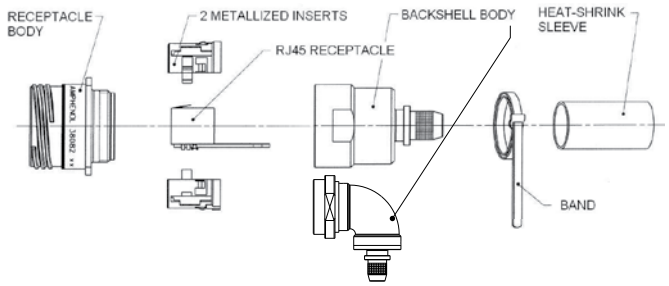

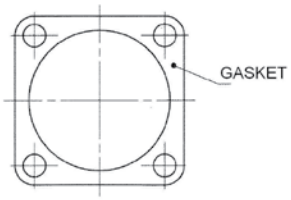

Jam Nut Receptacle *Straight Backshell*

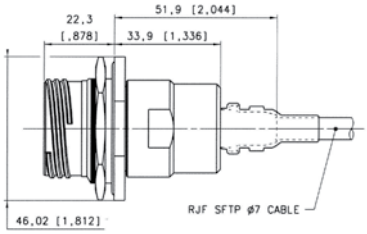

PART NUMBERS:
Olive Drab Cadmium Plating: **Kit38204**
Nickel Plating: **Kit38204NI**

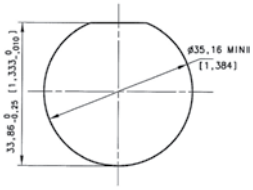

Panel Drilling

Jam Nut Receptacle *Right Angle Backshell*

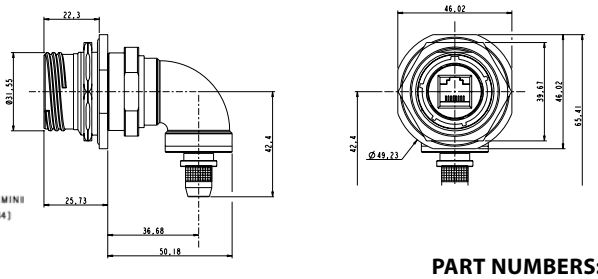

PART NUMBERS:
Olive Drab Cadmium Plating: **Kit40771**
Nickel Plating: **Kit40771NI**

Kit38204, Kit38204NI, Kit 40771 & Kit 40771NI include:

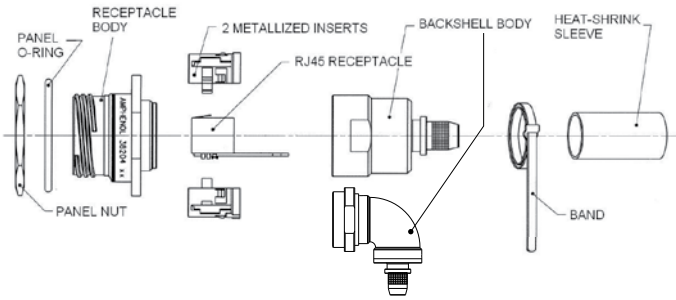

IMPORTANT NOTE
With these receptacles, customer will have to solder his own cable on the PCB. So the wire positions have to be defined by the customer according to his network.

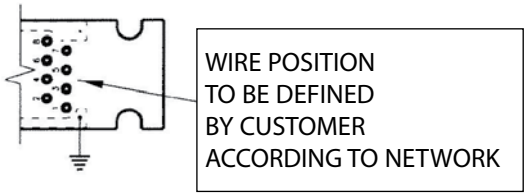

Plug *Straight Backshell*

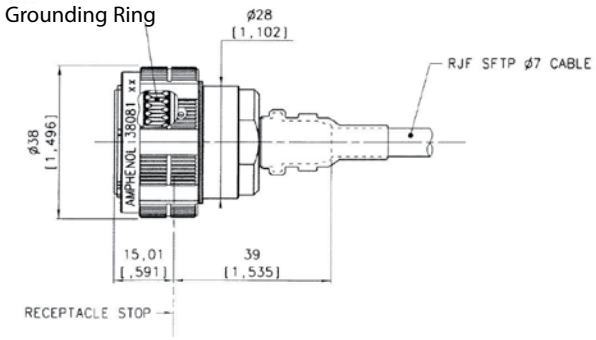

PART NUMBERS:
Olive Drab Cadmium Plating: **Kit38081**
Nickel Plating: **Kit38081NI**

Plug *Right Angle Backshell*

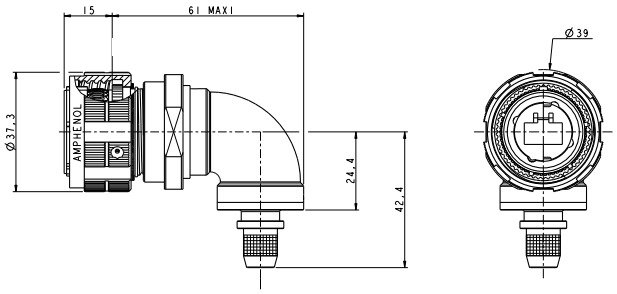

PART NUMBERS:
Olive Drab Cadmium Plating: **Kit40792**
Nickel Plating: **Kit40792NI**

Kit38081, Kit38081NI, Kit40792 & Kit40792NI include:

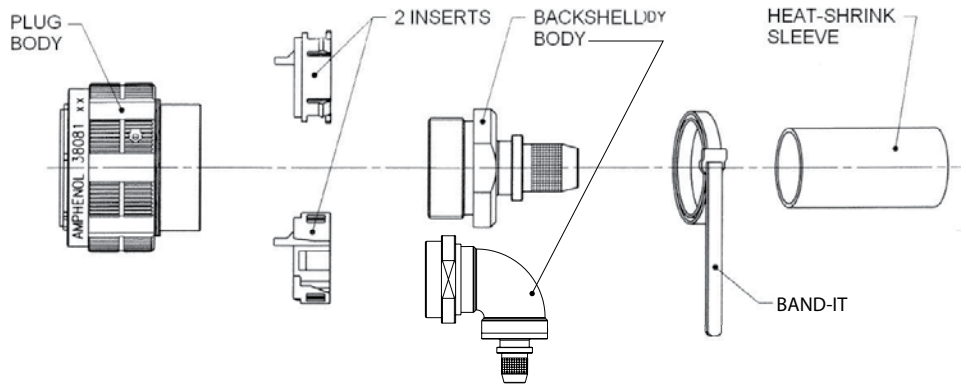

IMPORTANT NOTE
With these plugs, the standard RJ45 plug is not provided. Customer will have to crimp a standard RJ45 on the cable by himself.

We advise using our double Shielded, reinforced Cat5E cable (see page 24) with these RJFTV series EMI connectors.If customer wants to use his own cable, please check with us regarding compatibility with our backshells: **contact@rjfield.com**.
We also provide assembled cordsets, (see examples below). For this type of solution please provide the configuration needed: length, description of second end…

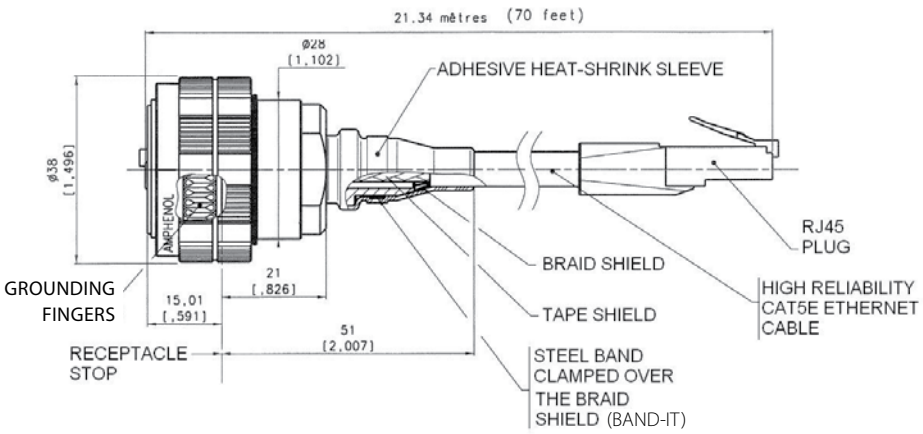

RJFTV

Through Bulkhead – Stand-off receptacles

Through Bulkhead Receptacles

Our RJFTV through bulkhead receptacles can be connected on each side with rugged RJFTV plugs. This system allows mechanical protection and a sealing (IP68) inside and outside the equipement, and keeps the flexibility offered by panel mount and plug connectors.

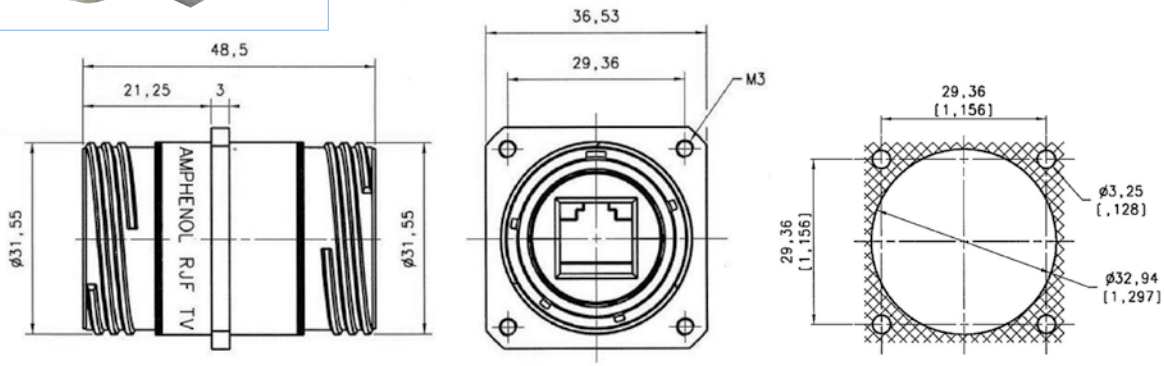

PART NUMBERS:

Nickel plating – Non metallized inserts: **RJFTVB2N ISO BRUT**
Nickel plating – Metallized inserts: **RJFTVB2N ISO NI**
Olive Drab Cadmium plating – Non metallized inserts: **RJFTVB2G ISO BRUT**
Olive Drab Cadmium plating – Metallized inserts: **RJFTVB2G ISO NI**

Stand-off receptacles

These receptacles can be soldered directly to your PCB. A compound insures a transversal sealing and good performance in high-vibration environments. The shell of those receptacles are in the « Stand Off » style. They can be connected with RJFTV series plugs.

Square Flange Receptacle

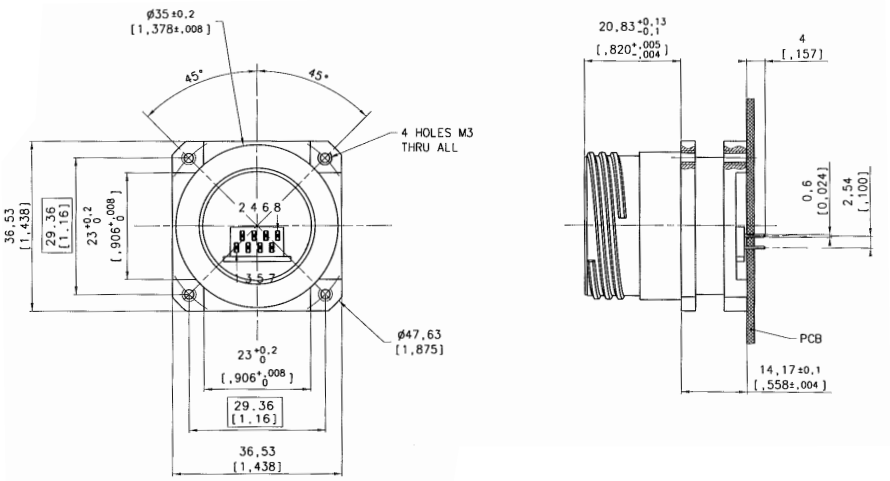

PART NUMBERS:

Olive Drab Cadmium Plating: **RJFTV25GF459**
Nickel Plating: **RJFTV25NF459**

PCB LAYOUT
Solder face view

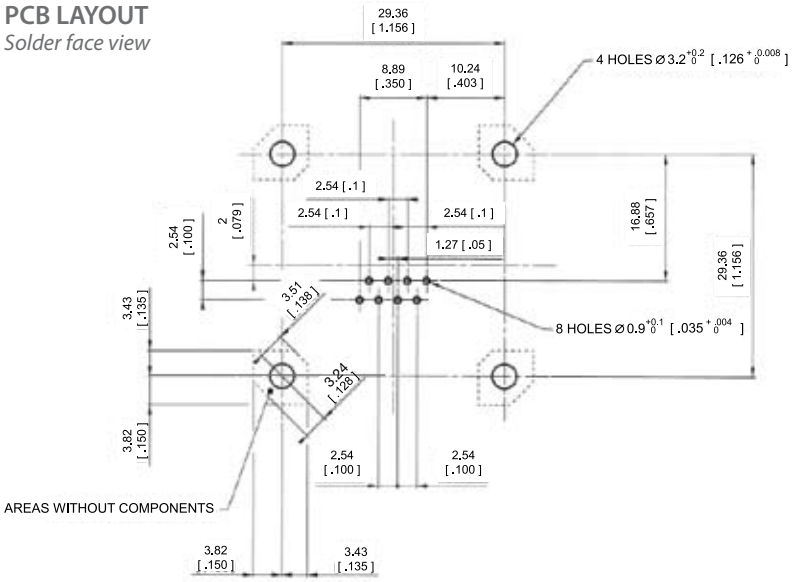

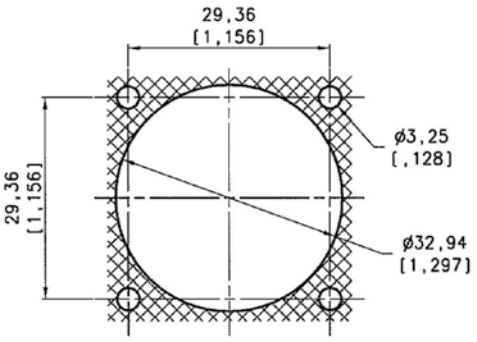

Panel Drilling

Jam Nut Receptacle

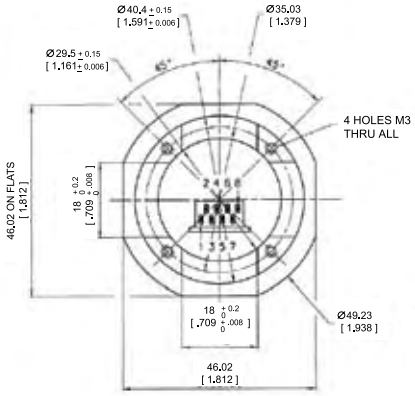

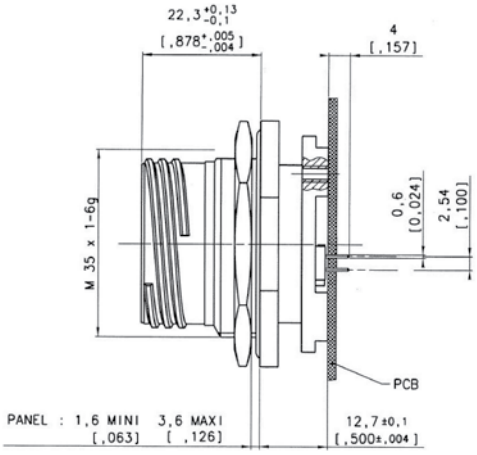

PART NUMBERS:

Olive Drab Cadmium Plating: **RJFTV75GF459** - Nickel Plating: **RJFTV75NF459**

PCB LAYOUT
Solder face view

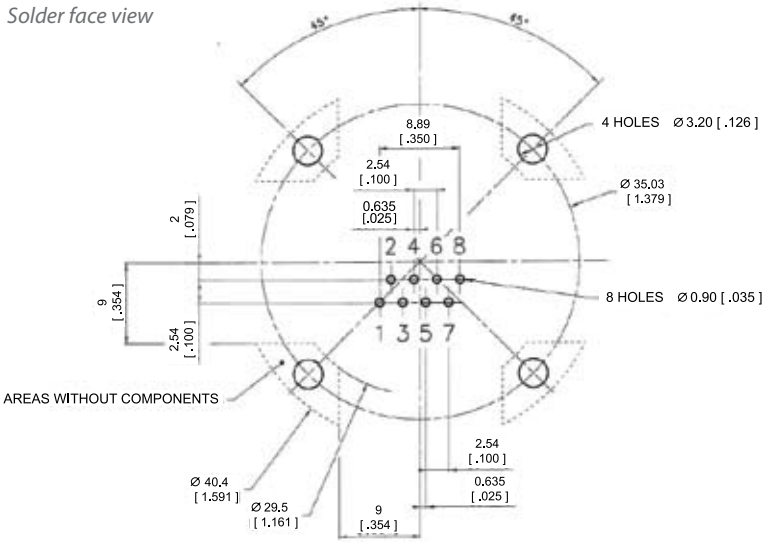

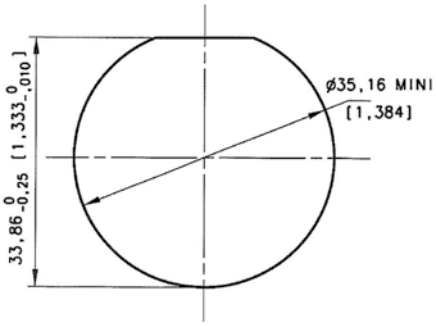

Panel Drilling

RJF/RJF TV

Environmentaly Sealed Receptacles, Transversally sealed receptacles

ROHS COMPLIANT N, B & BZ

SEALED RECEPTACLE In some applications, a transversal sealing for the receptacle is a « must ». This will prevent fluids and dust from going through the receptacle when plug or cap are not mated to the receptacle. The sealed solution (version "S") has a compound at the rear of the receptacle as shown on the examples below. This feature is available both in RJF and RJF TV shells (please consult the relevant data sheet for product details and accessories). In addition, the Sealed RJF TV has been successfully tested in very high vibration corresponding to airplane applications.

Applications

- Outdoor Equipment
- Airplanes Equipment
- Tactical Radios
- Shelters
- Rugged computers
- Data Acquisition and Transmission in Harsh Environments

Data Transmission

10 BaseT, 100 BaseTX and 1000 BaseT networks Cat 5e per TIA/EIA 568B and ClassD per ISO/IEC 11801

IMPORTANT NOTE

Due to the compound, the coding of the connector must be done in the factory: use the codes A, B, C or D in the Part Number.

MAIN CHARACTERISTICS

- Same as the RJF and RJF TV series … a complete IP68 sealing of the receptacle (even with no plug or no protective cap mated) is added.
- Outside dimensions are the same as the standard RJF and RJF TV series.
- Vibrations: The compounded versions of the RJF TV have been tested in vibration following the NAS 1599 Aeronautic specification (Ambient temperature):
  5 - 3000 Hz, 20g, 2,5 mm [.1 inch] double amplitude, 3 axes, 12 hours
  Note: This specification exceeds MIL-C-26500 requirements.

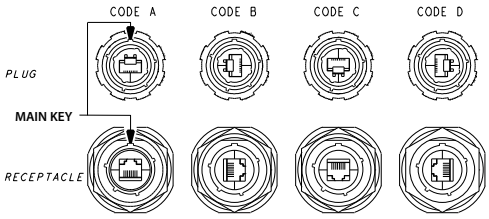

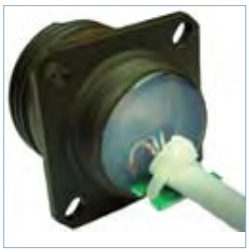

RJFTV 7S A 2G 15 100BTX

Part Number Code

Series	**RJF TV**	**7S**	**A**	**2**	**G**	**03 100BTX**

RJF: MIL-DTL-26482 H bayonet
RJFTV: MIL-DTL-38999 Series III

Shell Type
2S: Sealed Square Flange Receptacle
7S: Sealed Jam Nut Receptacle

Coding
A,B,C,D

Back Terminations *(For Receptacles only)*
1: Female RJ45
1RA: Right Angle Female RJ45
2: RJ45 Cordset

Shell material & Finish
B: Aluminium shell - black coating *(Only available for RJF Series)* - ROHS compliant
N: Aluminium shell - nickel plating - ROHS compliant *(note: receptacle inserts are metallized)*
G: Aluminium shell - olive drab cadmium plating *(note: receptacle inserts are metallized)*
BZ: Marine bronze shell *(only available for RJFTV) (receptacle inserts are metallized)* - ROHS compliant

Cordset Length *(For Receptacles with "2" Back Termination only)*
03 100 BTX: 0.3m [11.81 inches]
05 100 BTX: 0.5m [19.68 inches]
10 100 BTX: 1m [39.37 inches]
15 100 BTX: 1.5m [59.05 inches]

Remark: Cabling configuration: 100 BTX = 568B (Ethernet specification)

Examples:
- Bayonet, A coding, Olive Drab Cadmium Jam Nut sealed receptacle with female RJ45 Back termination: RJF 7SA 1 G
- Bayonet, A coding, Black square flange sealed receptacle, Female RJ45 Back termination: RJF 2SA 1 B
- Series III, A coding, Olive Drab Cadmium Jam Nut sealed receptacle, 1.5m [59.05"] 100 BTX cordset: RJF TV 7SA 2 G15 100BTX

RJF/RJF TV

Hermetic receptacles

NEW

ROHS COMPLIANT N, B & BZ

HERMETIC RECEPTACLE In some applications, a transversal hermiticity for the receptacle is a « must ». This will prevent gas from going through the receptacle when plug or cap are not mated to the receptacle. The hermetic solution (version "H") has a compound at the rear of the receptacle as shown on the examples below. This feature is available both in RJF and RJF TV shells (please consult the relevant data sheet for product details and accessories). Helium leakage is less than 1.10^{-6} cm^3 per second [0.1 micron cubic ft per hour] at one bar [15 psi] pressure differential.

Applications

- Outdoor Equipment
- Airplanes Equipment
- Tactical Radios
- Shelters
- Rugged computers
- Data Acquisition and Transmission in Harsh Environments

Data Transmission

10 BaseT, 100 BaseTX and 1000 BaseT networks Cat 5e per TIA/EIA 568B and ClassD per ISO/IEC 11801

IMPORTANT NOTE

Due to the compound, the coding of the connector must be done in the factory: use the codes A, B, C or D in the Part Number.

MAIN CHARACTERISTICS

- Same as the RJF and RJF TV series … a complete IP68 sealing of the receptacle (even with no plug or no protective cap mated) is added.
- Outside dimensions are the same as the standard RJF and RJF TV series.
- Vibrations: The compounded versions of the RJF TV have been tested in vibration following the NAS 1599 Aeronautic specification (Ambient temperature): 5 - 3000 Hz, 20g, 2,5 mm [.1 inch] double amplitude, 3 axes, 12 hours
  Note: This specification exceeds MIL-C-26500 requirements.

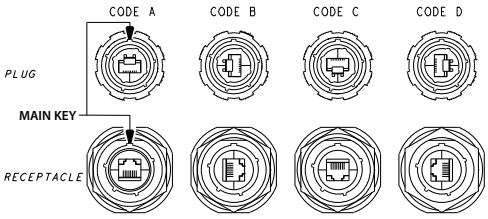

RJFTV 7 H 2G 15 100BTX

Part Number Code

Series	RJF TV	7H	A	2	G	03 100BTX
RJF: MIL-DTL-26482 H bayonet **RJFTV:** MIL-C-38999 series III						
Shell Type **2H:** Transversally Sealed and Hermetic Square Flange Receptacle **7H:** Transversally Sealed and Hermetic Jam Nut Receptacle						
Coding **A,B,C,D**						
Back Terminations (For Receptacles only) **1:** Female RJ45 **1RA:** Right Angle Female RJ45 **2:** RJ45 Cordset						
Shell material & Finish **B:** Aluminium shell - black coating *(Only available for RJF Series)* - ROHS compliant **N:** Aluminium shell - nickel plating - ROHS compliant *(note: receptacle inserts are metallized)* **G:** Aluminium shell - olive drab cadmium plating *(note: receptacle inserts are metallized)* **BZ:** Marine bronze shell *(only available for RJFTV) (receptacle inserts are metallized)* - ROHS compliant						
Cordset Length *(For Receptacles with "2" Back Termination only)* **03: 100 BTX:** 0.3m [11.81 inches] **05: 100 BTX:** 0.5m [19.68 inches] **10: 100 BTX:** 1m [39.37 inches] **15: 100 BTX:** 1.5m [59.05 inches]						

Remark: Cabling configuration: 100 BTX = 568B (Ethernet specification)

Examples:
- Bayonet, A coding, Olive Drab Cadmium Jam Nut sealed receptacle with female RJ45 Back termination: RJF 7HA 1 G
- Bayonet, A coding, Black square flange sealed receptacle, Female RJ45 Back termination: RJF 2HA 1 B
- Series III, A coding, Olive Drab Cadmium Jam Nut sealed receptacle, 1.5m [59.05"] 100 BTX cordset: RJF TV 7HA 2 G15 100BTX

CABLE CAT 5E

High Reliability Cat 5e Ethernet Cable & Cordsets

General Construction:A 4 pair, 24 AWG, 100 Ohm SFTP round patch cable, designed to the ISO / IEC 11801 Category 5e requirements (cat 5e on 76m). The cable contains 4 twisted pairs, cabled, double shielded with kevlar reinforcement strands, jacketed in black UV resistant Polyurethane HFFR. Designed for fixed or portable applications in harsh environments.

HFFR: Halogen Free Flame Retardant
Jacket Compound Specification:
Halogen Free Flame Retardant Polyether-based Polyurethane. Glossy finish. Excellent hydrolysis resistance. High microbial resistance. UV resistant.
High flexibility.

Applications
- Robotics
- Motion Control
- Railways
- CNC Machines
- Battelfield communication
- Industrial Process Control

PHYSICAL CHARACTERISTICS

CONDUCTORS	24 AWG (0,25 mm²) tinned copper, 7x0.20 mm
INSULATION	Color coded 568-B, Linear Low Density Polyethylene, Nom. Dia. 0,039" (1mm)
ASSEMBLY	Pairs cabled with Kevlar strength members and separation tape wrapped
SHIELDS	Inner: Aluminium mylar 100% coverage Outer: Tinned copper braid 80% coverage
JACKET	Black, special PUR compound
WEIGHT	40 lbs / mft (59 kg/km)
OUTSIDE DIAM.	0.28" (7.1 mm) nom.
MIN BEND RADIUS *(During installation)*	67.5mm (9x O. D.)
MIN BEND RADIUS *(During operation)*	37.5mm (5 x O.D.)
MIN FLEXES TO FAILURE	Passes IEC 61156-6 requirtements
TEMPERATURE	Plus 85°C, minus 40°C

Cordsets with a RJ45 plug overmolded on each end	
Length (m/ft)	**Part Number**
0,76 m / 2,5 ft	RJF SFTP 5E 0076
1,00 m / 3.28 ft	RJF SFTP 5E 0100
1,52 m / 5 ft	RJF SFTP 5E 0152
3,05 m / 10 ft	RJF SFTP 5E 0305
4,57 m / 15 ft	RJF SFTP 5E 0457
5,00 m / 16.4 ft	RJF SFTP 5E 0500
6,00 m / 19.68 ft	RJF SFTP 5E 0600
6,24 m / 20.46 ft	RJF SFTP 5E 0624
7,62 m / 25 ft	RJF SFTP 5E 0762
8,00 m / 26.24 ft	RJF SFTP 5E 0800
10,00 m / 32.78 ft	RJF SFTP 5E 1000
14,00 m / 45.92 ft	RJF SFTP 5E 1400
15,25 m / 50 ft	RJF SFTP 5E 1525
22,87 m / 75 ft	RJF SFTP 5E 2287
30,5 m / 100 ft	RJF SFTP 5E 3050
45,75 m / 150 ft	RJF SFTP 5E 4575
50,00 m / 164 ft	RJF SFTP 5E 5000
61,00 m / 200.08 ft	RJF SFTP 5E 6100

ELECTRICAL CHARACTERISTICS

DC Resistance	96 Ohms/Km @ 20°C
Impedance	100 +/- 15 Ohms 1-100 MHz
Attenuation	
772 KHz	2.70 db/100m nom.
1 MHz	3.15 db/100m nom.
4 MHz	6.45 db/100m nom.
10 MHz	9.90 db/100m nom.
16 MHz	12.3 db/100m nom.
20 MHz	13.8 db/100m nom.
31.25 MHz	17.7 db/100m nom.
62.5 MHz	25.6 db/100m nom.
100 MHz	33 db/100m nom.
N.E.X.T. *(Near-End Crosstalk Loss)*	
772 KHz	64 db min.
1 MHz	62 db min.
4 MHz	53 db min.
10 MHz	47 db min.
16 MHz	44 db min.
20 MHz	42 db min.
31.25 MHz	40 db min.
62.5 MHz	35 db min.
100 MHz	32 db min.
Capacitance	46pF/m nom. @ 1KHz
LCL	43 dB min. @ 64 KHz
Capacitance Unbalance	3.4 pF/m max. @ 1KHz (wire to ground)
Insulation Resistance	150 M Ohm min.
Voltage Rating	230 VMS
Dielectric Strength	VAC/1 min - 700 V/Min
Propagation Delay (100 MHz)	5.2 ns/m max. @ 100 MHz
Delay Skew	20 ns/100m max. @ 1-100 MHz
Resistance Unbalance	3% max. @ 20°C
Structural Return Loss (100 MHz)	23db/100m min. @ 1-20 MHz
Spark test (tested during production)	3 KV
Velocity of propagation	67% nom.

Reel of cable (without RJ45 plug on ends)	
Length (m / ft)	**Part Number**
100 m / ~328 ft	190-038045-00
300 m / ~984 ft	190-038045-01

USBF TV *(USB-A)*

USB Connection System for Harsh Environment

ROHS COMPLIANT N & BZ

With USB Field, you can insert a standard USB 2.0 cordset into a metallic plug which will protect it from shocks, dust and fluids.

No hazardous on-field cabling and grounding!

This metallic plug is connected into a receptacle, using a Tri Start Thread coupling mechanism (MIL-DTL-38999 series III type) with anti-decoupling device for high vibrations.

Applications

- Embedded Computers
- Data Acquisition and transmission in harsh environment
- Railways
- Battelfield Communication Systems
- Navy Systems

Data Transmission

USB Specification 2.0

Data Rate: Up to 480 Mb/s for High Speed USB

MAIN CHARACTERISTICS

- Sealed against fluids and dusts (IP68)
- Shock, Vibration and Traction resistant
- No cabling operation in field and no tools required
- Improved EMI protection
- Tri Start Thread coupling mechanism (MIL-DTL-38999 series III type) with anti-decoupling device
- 2 mechanical Coding / Polarization possibilities by the user (receptacle insert rotation)
- USBF TV plug retention in the receptacle: 100 N in the axis
- Mating cycles: 500 to 1500

Environmental Protection

- Sealing (when mated): IP68 (Temporary immersion)
- Salt Spray: 48 h with Nickel plating
  > 500 h with Olive Drab Cadmium
  1000 h with marine bronze shell
- Fire Retardant / Low Smoke: UL94 V0 and NF F 16 101 & 16 102
- Vibrations: 10 – 500 Hz, 10 g, 3 axes: no discontinuity > 1micro s
- Shocks: IK06: weight of 250 g drop from 40 cm [15.75 in] onto connectors (mated pair)
- Humidity: 21 days, 43°C, 98% humidity
- Temperature Range: - 40°C / +85°C

Part Number Code

Series	**USBF TV**	**2**	**1**	**G**
USB Field TV				
Shell Type				
6:	Plug			
2:	Square flange receptacle			
2PE:	Square flange receptacle with metal backshell *(type 1)* & with metal backshell + plastic gland *(type 2)*			
2PEM:	Square flange receptacle with backshell + metal gland *(only for back termination type 2 = Solder)*			
7:	Jam nut receptacle			
7PE:	Jam nut receptacle with metal backshell *(type 1)* & with metal backshell + plastic gland *(type 2)*			
7PEM:	Jam nut receptacle with backshell + metal gland *(only for back termination type 2 = Solder)*			
Back Terminations *(Receptacles only)*				
1:	Female USB-A			
2:	Solder (4 tinned holes)			
Shells Material & Finish				
N:	Aluminium shell - Nickel plating - ROHS compliant			
G:	Aluminium shell - Olive Drab Cadmium plating			
BZ:	Marine bronze shell - ROHS compliant			

Examples:
- Olive Drab Cadmium Plug: USBF TV 6G
- Olive Drab Cadmium Square Flange Receptacle, USB-A back terminat°: USBF TV 21G
- Olive Drab Cadmium Jam Nut Receptacle, USB-A receptacle back terminat°: USBF TV 71G
- Nickel Jam Nut Receptacle, solder termination: USBF TV 72N

Plug

■ Shell type 6

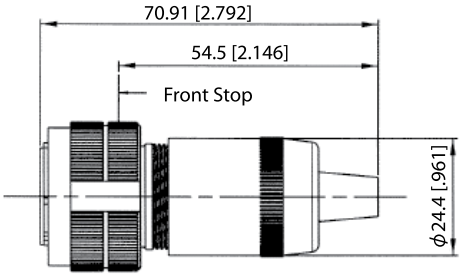

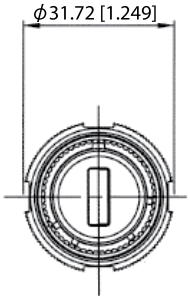

USBF TV 6 X

Receptacles

■ Square flange receptacle
4 mounting holes: Shell type 2

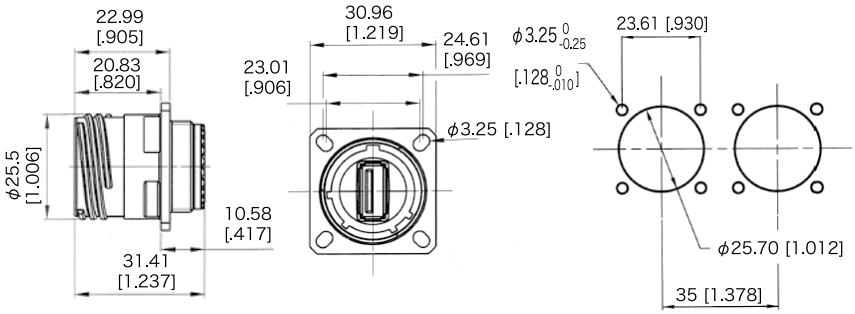

USBF TV 2 XX

Panel Drilling

■ Jam nut receptacle
Hexagonal Nut mounting:
Shell type 7

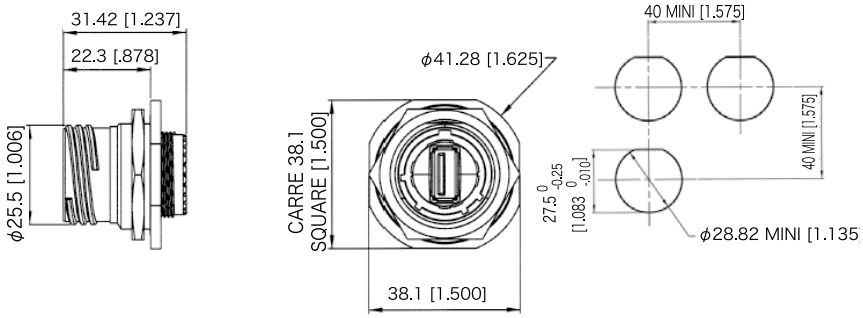

USBF TV 7 XX

Panel Drilling

■ Receptacles with backshell
Shell type 2PE and 7PE

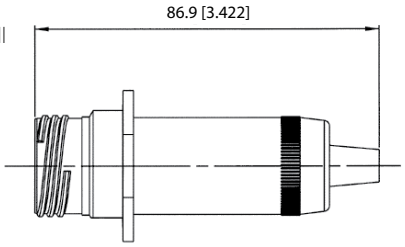

Backshell used with back termination type 1:
USB A receptacle (Not sealed)
Same panel drilling as USBFTV 2xx

USBF TV 2PE / 7PE-1

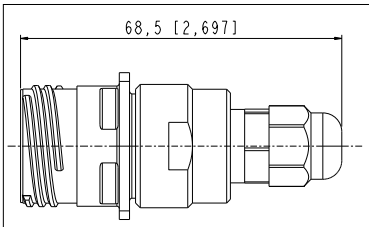

Backshell used with
back termination type 2:
Solder (Sealed – IP68)

USBF TV 2PE(M) / 7PE(M)-2

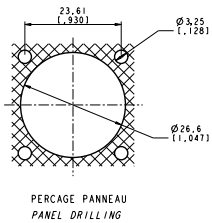

Panel Drilling *(for type 2 only)*

Back Terminations

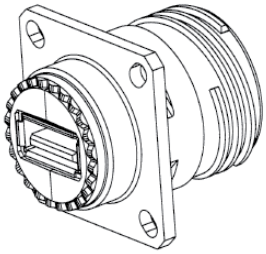

Type 1: Female USB-A

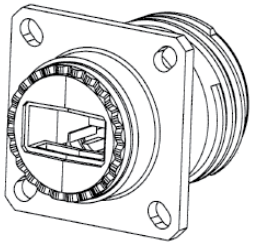

Type 2: Solder 4 Tinned holes to solder your cable

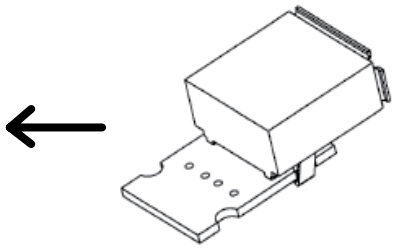

View of the PCB of the Type 2 version with
4 tinned holes for solder termination

Assembly Instructions

Can be used with most the USB cordset brands: No tools required!

Plug Assembly

1. Only if you need a full sealing (IP68): Install the white sticker around the plug, covering the 4 little holes of the overmolding
2. Insert the black O Ring around the front face of the USB A plug. This O Ring will ensure connection sealing
3. Insert the USB cordset into the metallic backshell
4. Insert the retention spacer laterally to the cable (this spacer is soft, in order to adapt to different shapes of overmolding) and slide the over-molding of the USB-A plug into this retention spacer
5. Insert the friction ring laterally to the cable
6. Choose the right coding (2 positions) and insert the USB-A plug into the protective plug. Note at this step, the main key is used for polarization.

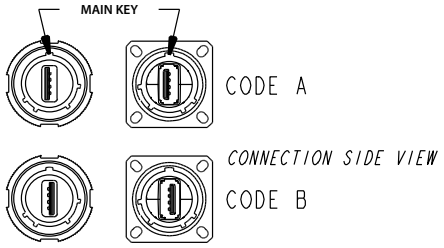

7. Screw the backshell on the plug body. A wrench can be necessary to fully tighten it, and the connection to the receptacle can help

IMPORTANT NOTE
The connection sealing is not done by the black retention spacer (which is sloted), but by the front face ORing (fig. 2)

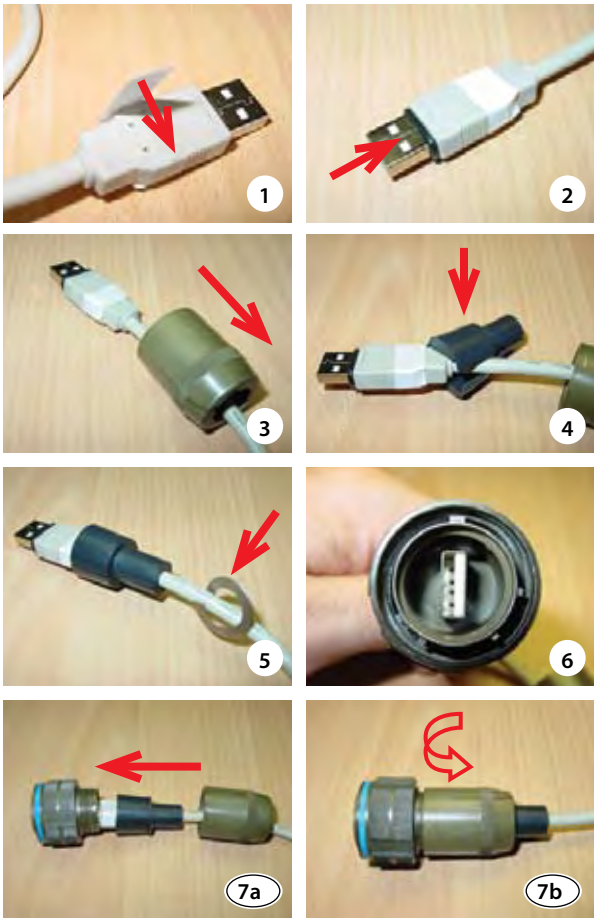

Receptacle Assembly

Insert the USB module from the rear. Reference is main key. Beware to have a coding compatible with the coding you used for the plug: on front view, the white shapes in the USBs must be on the same side.

To remove the USB module, insert the removal tool **USBF ODE** from the Front, and push back the module.

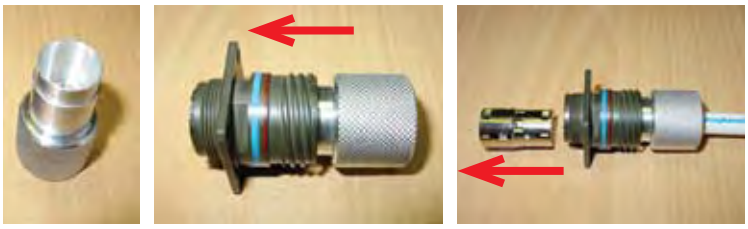

Accessories

- **Metallic Caps**

	USBF TVC	2	G
Connector Type			
6:	Plug		
2:	Square Flange Receptacle		
7:	Jam Nut Receptacle		
Shells Material & Finish			
N:	Aluminium shell - Nickel - ROHS compliant		
G:	Aluminium shell - Olive Drab Cadmium		
BZ:	Marine bronze shell - ROHS compliant		

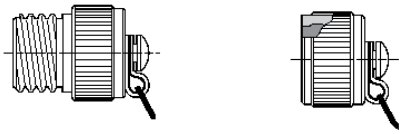

Plug Cap Receptacle Cap

- Panel Gasket for square flange receptacle (Thickness: 0,8 mm [.031]): JE15

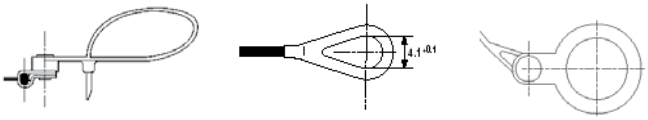

Plug Cap end Square flange receptacle cap end Jam Nut receptacle cap end

- Receptacle Insert removal tool: USBF ODE

USBF TV

Self Closing Cap (SCC Series)

NEW

This Self Closing cap automatically protects the USBF TV (type A) & USBBF TV (type B) square flange receptacles (MIL-DTL-38999 type), protecting your system from dust and water projection. A spring automatically closes the upper part of the cap when the USB plug is removed from the receptacle.

IMPORTANT NOTE
Metal Self Closing cap are sold separately (without receptacle)

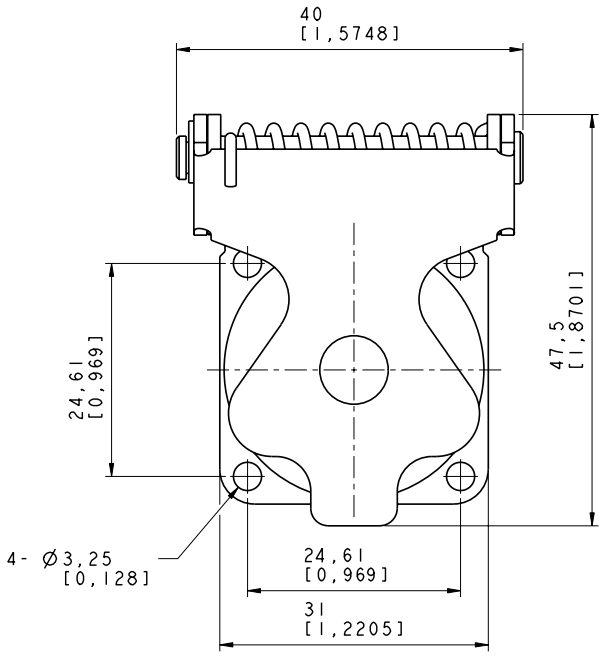

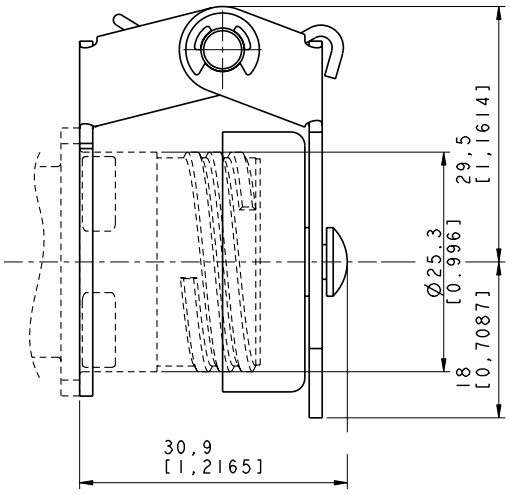

- **Panel Gasket for square flange receptacle (Thickness: 0,8 mm [.031]):**

PART NUMBER: JE15

PART NUMBER:

Self closing cap: **USBFTVSCC**

Remark: Compatible with USBFTV (type A) & USBBFTV (type B) square flange receptacles only:
USBFTV**2**XX (see page 25)
USBBFTV**2**XX (see page 37)

USBF TV

Transversally Sealed Receptacle

NEW

ROHS COMPLIANT N & BZ

SEALED RECEPTACLE In some applications, a transversal sealing for the receptacle is a « must ». This will prevent fluids and dust from going through the receptacle when plug or cap are not mated to the receptacle. The sealed solution (version "S") has a compound at the rear of the receptacle below. In addition, the Sealed USBF TV has been successfully tested in very high vibration corresponding to airplane applications.

Applications

- Embedded Computers
- Data Acquisition and transmission in harsh environment
- Railways
- Battelfield Communication Systems
- Navy Systems

MAIN CHARACTERISTICS

- Sealed against fluids and dusts (IP68)
- Shock, Vibration and Traction resistant
- No cabling operation in field and no tools required
- Improved EMI protection
- Tri Start Thread coupling mechanism (MIL-DTL-38999 series III type) with anti-de-coupling device
- 2 mechanical Coding / Polarization possibilities by the user (receptacle insert rotation)
- USBF TV plug retention in the receptacle: 100 N in the axis
- Mating cycles: 500 to 1500

Data Transmission

USB Specification 2.0

Data Rate: Up to 480 Mb/s for High Speed USB

Environmental Protection

- Sealing (when mated): IP68 (Temporary immersion)
- Salt Spray: 48 h with Nickel plating
  > 500 h with Olive Drab Cadmium
  1000 h with marine bronze shell
- Fire Retardant / Low Smoke: UL94 V0 and NF F 16 101 & 16 102
- Vibrations: 10 – 500 Hz, 10 g, 3 axes: no discontinuity > 1micro s
- Shocks: IK06: weight of 250 g drop from 40 cm [15.75 in] onto connectors (mated pair)
- Humidity: 21 days, 43°C, 98% humidity
- Temperature Range: - 40°C / +85°C

Part Number Code

Series USB Field TV	USBF TV	2PES	A	2	N	03	A

Shell Type
2S : Square flange receptacle
2PES: Square flange receptacle + backshell + plastic gland
2PEMS: Square flange receptacle + backshell + metal gland
7S: Jam nut receptacle
7PES: Jam nut receptacle + backshell + plastic gland
7PEMS: Jam nut receptacle + backshell + metal gland

Coding
"A" (Standard) or "B"

Back Terminations
2: Rugged USB cable (see corresponding datasheet page 42)

Shells Plating
N: Nickel
G: Olive drab cadmium plating

USB cable length
03: 30 cm [11.81 inches]
05: 50 cm [19.68 inches]
10: 1 meter [39.37 inches]

USB cable end
A: Standard USB-A plug
OPEN: Open cable (no connector)

Receptacles

■ Square flange receptacle
4 mounting holes: Shell type 2

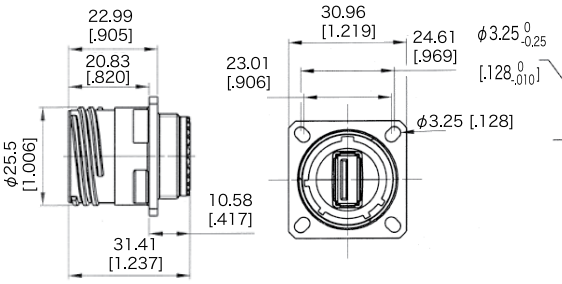

USBF TV 2SA XXX

Panel Drilling

■ Jam nut receptacle
Hexagonal Nut mounting:
Shell type 7

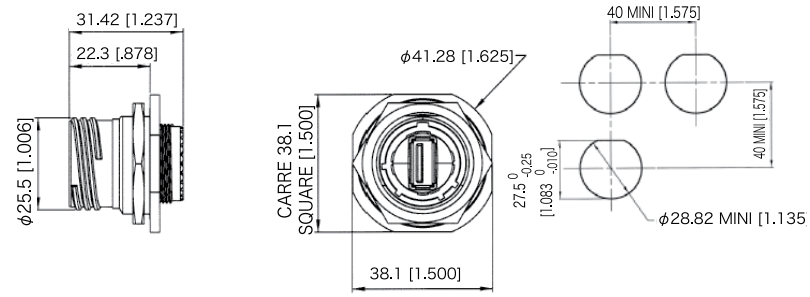

USBF TV 7SA XXX

Panel Drilling

■ Receptacles with backshell:
Shell type 2PE(M) and 7PE(M)

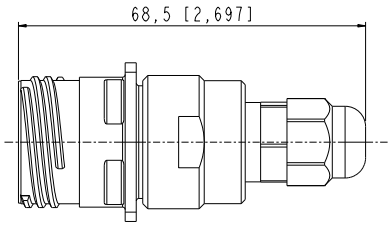

Backshell used with
back termination type 2:
Solder (Sealed – IP68)

USBFTV 2PE(M) SA2XXX / USBFTV 7PE(M) SA2 XXX

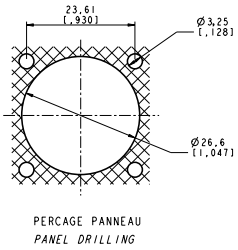

Panel Drilling

Cordset End

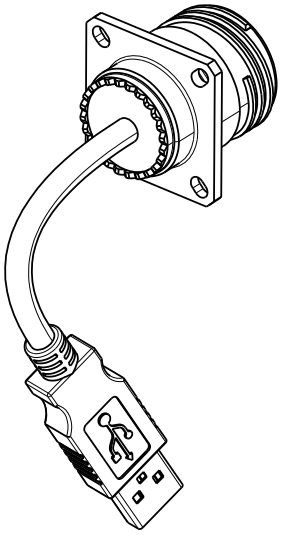

USB Cable end type "A"

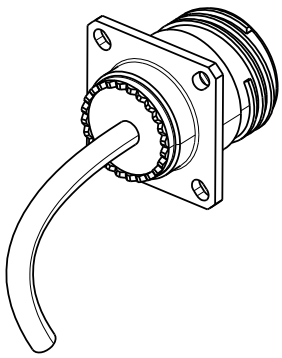

USB Cable type "OPEN"

Reinforced USBFTV MEMORY KEYS

Derived from MIL-DTL-38999 series III specification • from 512 MB to 64 GB

We provide reinforced USB memory keys available in different capacities. They can be used ONLY with our USBFTV series receptacles. When mated on the receptacle, the system is IP68.

Environmental Protection

- Sealing: IP68 (when mated)
- Salt Spray: 48 h with Nickel plating (ROHS)
  > 500 h with Olive Drab Cadmium
- Vibrations: MIL-STD-810F method 514.5 fig 514.5.C cat 14
- Temperature Range: - 40°C / +85°C (MIL-STD-810F)
- Data transmission during vibration & temperature tests

Other features

- Type: USB2.0
- Voltage: 5V DC - 500 mA max
- Electromagnetic compatibility: 89/336/EEC and Part 15 Class B

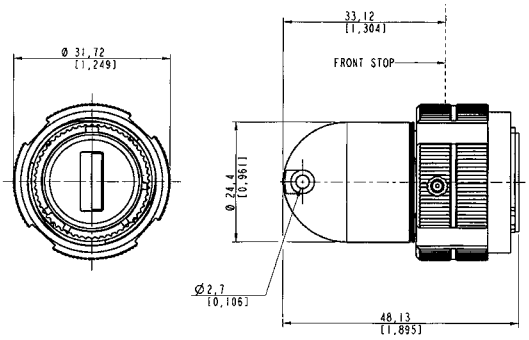

Up to memory size 4GB

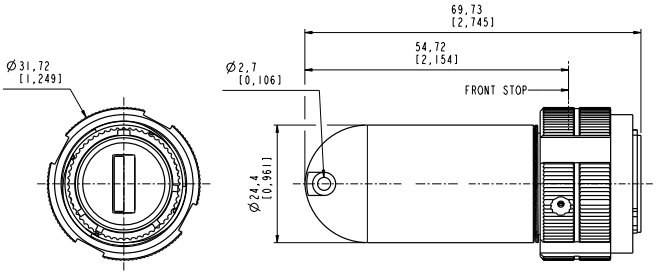

From 8 to 64 GB

IMPORTANT NOTE

USBFTV memory key to be used with USBF TV receptacle. See page 25 to 30

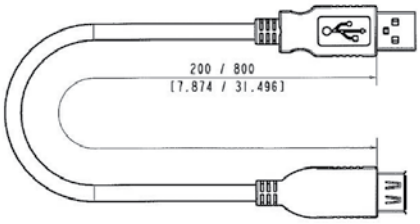

USB cordset is included with each memory key

DEFINITION OF PART NUMBER

USBFTV KEY 6	A	64	N	CAP
Beginning of every USBFTV Key part number. Remains unchanged.	**CODING POSITION:** **A:** coding A **B:** coding B * The coding can be changed on the receptacle counter part using our tool USBFODE	**CAPACITY OF YOUR USBFTV KEY:** 0512 | 1024 | 2048 | 4096 | 8192 16384 | 16384GT** | 32768 | 64 Other capacity, please consult us at **contact@usbfield.com**	**PLATING:** **"N":** nickel plating **"G":** olive drab cadmium **NB:** please check the plating of your USBFTV receptacle	**Cap:** With cap **Blank:** Without cap

** GT: Fast Data Transfert

EXAMPLE: **USBFTVKEY6A0512N:** USBFTV KEY – CODING A – CAPACITY OF 512MB – NICKEL PLATING

EXAMPLE: **USBFTVKEY6A1024GCAP:** USBFTV KEY – CODING A – CAPACITY OF 1024MB – OLIVE DRAB CADMIUM PLATING - PROTECTIVE CAP

Reinforced USB Memory Keys

Now available up to 64GB

NEW

ROHS COMPLIANT

We provide reinforced USB memory keys available in different capacities. When mated, the system is IP68. Shells are metallic with 1/4 turn bayonet coupling.

Dimensions of rugged USBF Key:

Environmental Protection

- Sealing: IP68 (when closed)
- Salt Spray: 48 h with Nickel plating (ROHS)
  > 96 h with Black coating (ROHS)
  > 500 h with Olive Drab Cadmium
- Vibrations: MIL-STD-810F method 514.5 fig 514.5.C cat 14
- Temperature Range: - 40°C / +85°C (MIL-STD-810F)

Other features

- Type: USB2.0
- Voltage: 5V DC - 500 mA max
- Electromagnetic compatibility: 89/336/EEC and Part 15 Class B

IMPORTANT NOTE

Compatible with any standard USB port

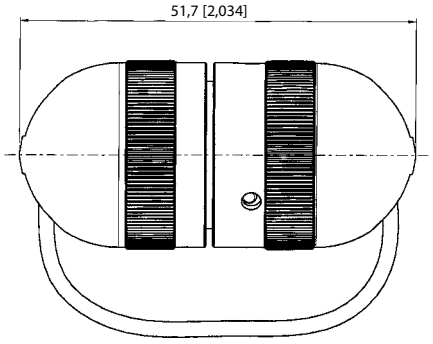

Up to memory size 4GB

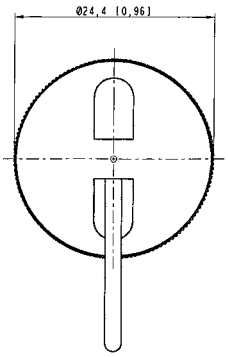

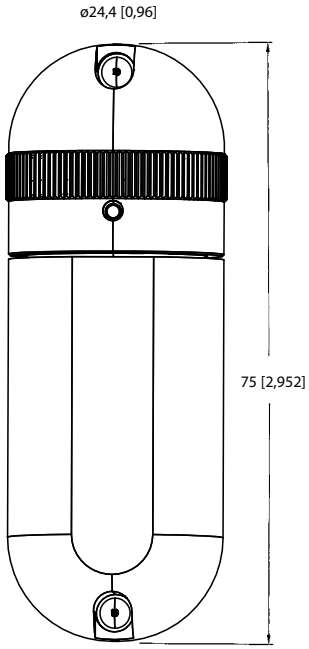

From 8 to 64 GB

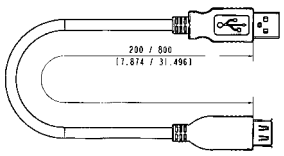

USB cordset is included with each memory key

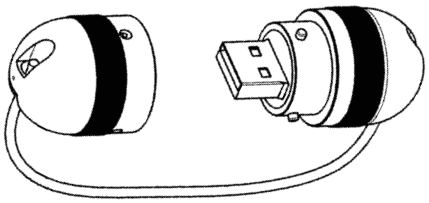

Rugged Metallic USB KEY with CAP SEALING: IP 67

DEFINITION OF PART NUMBER

USBF KEY	8192	N
Beginning of every USB Key part number. Remains unchanged.	**Capacity of your USBF Key:** 0512 | 1024 | 2048 | 4096 | 8192 | 16384 | 16384GT* | 32768 | 64 Other capacity, please consult us at **contact@rjfield.com**	**Shell finish:** **N:** Natural **G:** Green **B:** Black

* GT: Fast Data Transfert

EXAMPLE: **USBFKEY0512N:** USB MEMORY KEY - CAPACITY OF 512MB - SHELL FINISH: NATURAL

EXAMPLE: **USBFKEY1024G:** USB MEMORY KEY - CAPACITY OF 1024MB - SHELL FINISH: GREEN

High Reliability USB 2.0 Cordsets

Derived from MIL-DTL-38999 series III specification

ROHS COMPLIANT

General Construction: this is a USB-2.0 cable containing one 28 AWG 90Ω characteristic impedance data pair, two 24 AWG power conductors, overall SFTP shields (SFTP = double shielding, Braid and foild), jacketed in black UV resistant Polyurethane HFFR*. Designed for fixed or portable applications in industrial and harsh environments.
*HFFR: Halogen Free Flame Retardant.

Jacket Compound Specification:
Halogen Free Flame Retardant Polyether-based Polyurethane. Glossy finish. Excellent hydrolysis resistance. High microbial resistance. UV resistant. High flexibility.

Applications
- Robotics
- Motion Control
- Railways
- CNC Machines
- Battelfield communication
- Industrial Process

PHYSICAL CHARACTERISTICS

DATA CONDUCTORS	bare copper, 7/0.12 mm nom (28 AWG)
DATA INSULATION	0.9 mm nom
COLOR DATA PAIR	Green & white
POWER CONDUCTORS	Tinned copper, 7/0.2 mm (24 AWG)
POWER INSULATION	1.1 mm nom
COLOR POWER WIRE	Red & Black
SHIELDS	Foil: poviding 100% coverage, in contact with tinned copper drain wire and an overall braid providing 65% nom. coverage made of 16x5/0.1 mm tinned copper strands
JACKET	PU compound
COLOR JACKET	Black
WEIGHT	26 lbs/mft (38 kg/km)
OUTSIDE DIAM.	0.20 inch (5.1 mm nom. +/- 0.15)
MIN BEND RADIUS *(During installation)*	45.9 mm (9x O. D.)
MIN BEND RADIUS *(During operation)*	25.5mm (5 x O.D.)
TEMPERATURE installation	Plus 60°C, minus 5°C
TEMPERATURE operational	Plus 85°C, minus 40°C

ELECTRICAL CHARACTERISTICS

DC RESISTANCE	94 Ohms/Km @ 20°C
IMPEDANCE	90 +/- 13 Ohms 1-400 MHz
ATTENUATION	
1 KHZ	8 db/100m max.
4 MHZ	15,6 db/100m max.
24 MHZ	38 db/100m max.
96 MHZ	76 db/100m max.
200 MHZ	128 db/100m max.
400 MHZ	232 db/100m max.
CAPACITANCE 2X28 AWG	54pF/m nom. @ 1KHz
CAPACITANCE UNBALANCE	2.0 pF/m max. @ 1KHz (wire to ground)
DIELECTRIC STRENGTH	VAC/1 min - 500 V/Min
RESISTANCE UNBALANCE	2% max. @ 20°C
VELOCITY OF PROPAGATION	65% min. 68% max.

CORDSETS WITH A USB A PLUG OVERMOLDED ON EACH END (OUT OF USB SPECIFICATION > 5 M)

Length (m/ft)	Part Number
6 m / 19,68 ft	USB2 AA 600 PU HFFR
7 m / 22.96 ft	USB2 AA 700 PU HFFR
8 m / 26.24 ft	USB2 AA 800 PU HFFR
9 m / 29.52 ft	USB2 AA 900 PU HFFR
10 m / 32.80 ft	USB2 AA 1000 PU HFFR

REEL OF DRUM (WITHOUT USB PLUG ON ENDS)

Length	PN
300 m / ~ 984 ft	190-040567-00

CORDSETS WITH A USB A PLUG OVERMOLDED ON EACH END (UNDER USB SPECIFATION ≤ 5M)

Length (m/ft)	Part Number
0.5 m / 1,64 ft	USB2 AA 050 PU HFFR
1 m / 3.28 ft	USB2 AA 100 PU HFFR
1.50 m / 4.92 ft	USB2 AA 150 PU HFFR
2 m / 6.56 ft	USB2 AA 200 PU HFFR
2.50 m / 8.2 ft	USB2 AA 250 PU HFFR
3 m / 9.84 ft	USB2 AA 300 PU HFFR
3.50 m / 11.48 ft	USB2 AA 350 PU HFFR
4 m / 13.12 ft	USB2 AA 400 PU HFFR
4.5 m / 14.76 ft	USB2 AA 450 PU HFFR
5 m / 16.40 ft	USB2 AA 500 PU HFFR

USBFTV SC

Spring Loaded Receptacle

NEW

ROHS COMPLIANT N & BZ

This product offers a new coupling solution, particurlarly for applications requiring quick disconnect.The system consists of a circular spring within in the receptacle keeping the plug mated, and creating an internal coupling mechanism.

MAIN CHARACTERISTICS

- Sealed against fluids and dusts (IP67)
- Shock, Vibration and Traction resistant
- No cabling operation in field and no tools required
- Improved EMI protection
- Mating cycles: 500
- Mating force after 500 cycles: 40 N
- Unmating force after 500 cycles: 55 N

Environmental Protection

- Sealing (when mated): IP67 (Temporary immersion)
- Salt Spray: 48 h with Nickel plating
  > 500 h with Olive Drab Cadmium
- Fire Retardant / Low Smoke: UL94 V0 and NF F 16 101 & 16 102
- Vibrations: 10 – 500 Hz, 10 g, 3 axes: no discontinuity > 1micro s
- Shocks: IK06: weight of 250 g drop from 40 cm [15.75 in] onto connectors (mated pair)
- Humidity: 21 days, 43°C, 98% humidity
- Temperature Range: - 40°C / +85°C

Applications

- Embedded Computers
- Data Acquisition and transmission in harsh environment
- Railways
- Battelfield Communication Systems
- Navy Systems

Data Transmission

USB Specification 2.0

Data Rate: Up to 480 Mb/s for High Speed USB

Part Number Code

Series **USBFTV Spring Loaded**	**USBF SC**	**2**	**1**	**G**
Shell Type **6:** Plug **1:** Inline receptacle **2:** Square flange receptacle **7:** Jam nut receptacle				
Back Terminations *(Receptacles only)* **1:** Female USB-A **2:** Solder (4 tinned holes) - Not available for shell type "1" (Inline receptacle)				
Shells Material & Finish **N:** Aluminium shell - Nickel plating - ROHS compliant **G:** Aluminium shell - Olive Drab Cadmium plating **BZ:** Marine bronze shell - ROHS compliant				

Plug

■ Shell type 6

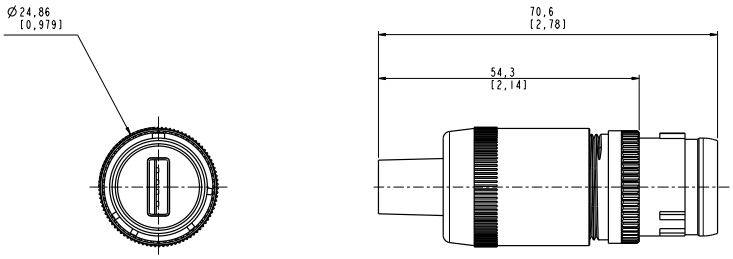

USBFSC 6 X

Receptacles

■ Square flange receptacle
4 mounting holes: Shell type 2

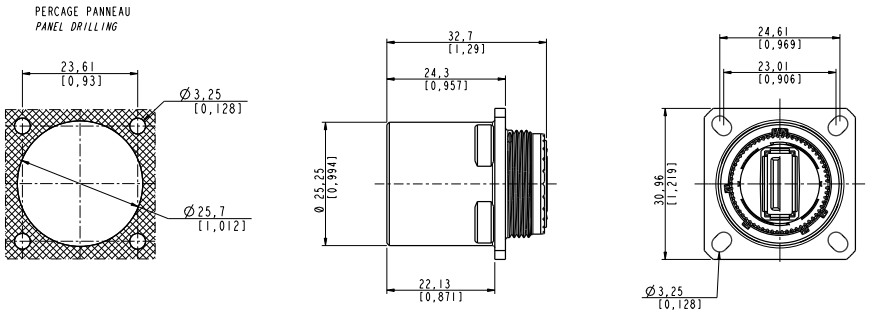

USBFSC 21 X

■ Jam nut receptacle
Hexagonal Nut mounting:
Shell type 7

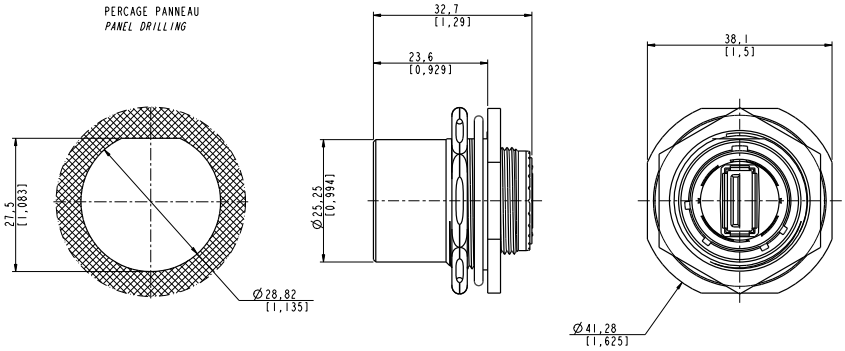

USBFSC 71 X

■ Inline Receptacles:
Shell type 1

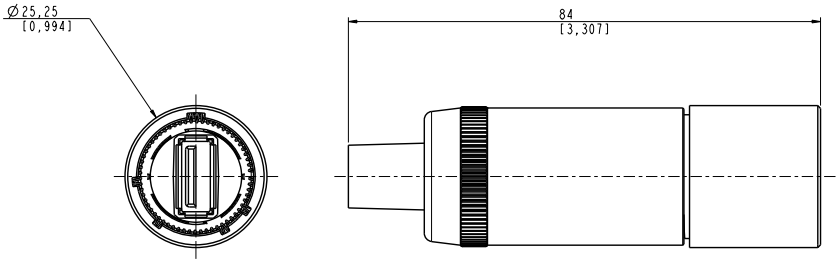

USBFSC 11 X

Back Terminations

USBFSC Back Terminations Receptacles

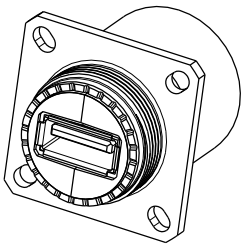

Type 1: Female USB-A

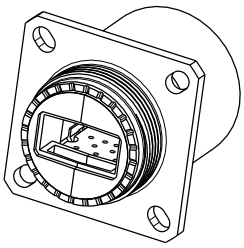

Type 2: Solder (4 tinned holes)

USBFTV

Receptacles with 360° EMI backshells stand off receptacles

USBFTV Receptacles series with EMI backshells provide 360° shielding: same protection than the one proposed per Standard MIL-DTL-38999 serie III Connectors. We offer these EMI backshells with square flange and jam nut receptacles. The available platings are nickel or olive drab cadmium.
With those solutions we suggest using our reinforced USB cable (shielded – zero halogen jacket). See page 33.
We can provide those receptacles:
- with cordset already soldered
- without cordset

RECEPTACLES WITH 360° EMI BACKSHELLS

EXAMPLE WITH A SQUARE FLANGE RECEPTACLE *(PROVIDED WITHOUT CABLE)*

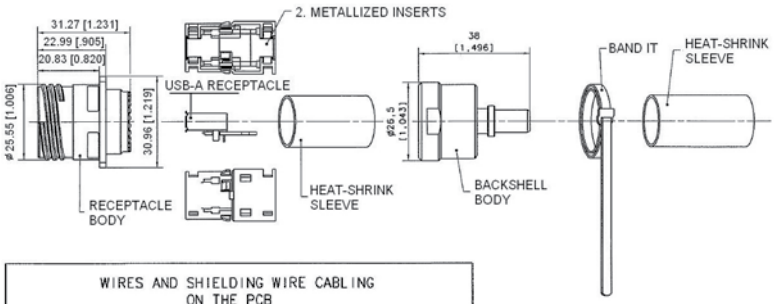

IMPORTANT NOTE
With receptacles provided without cable, customer will have to solder his cable on the PCB, please find below the cabling specification.
If customer prefers to use his cable, please check with us compatibility with our EMI backshells:
www.usbfield.com

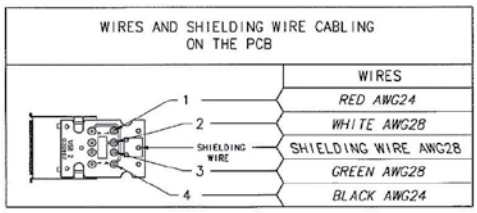

PART NUMBERS:
Jam nut receptacle – Nickel: **KIT40245**
Jam nut receptacle – Olive Drab Cadmium: **KIT40245G**
Square flange receptacle – Nickel: **KIT40263**
Square flange receptacle – Olive Drab Cadmium: **KIT40263G**

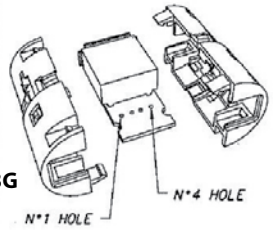

STAND OFF RECEPTACLE

Those receptacles can be soldered directly on your PCB. A compound insures a transversal sealing and good performance in high-vibration environments. The shell of these receptacles are in the « Stand Off » style. They can be connected with rugged USBFTV series plugs.

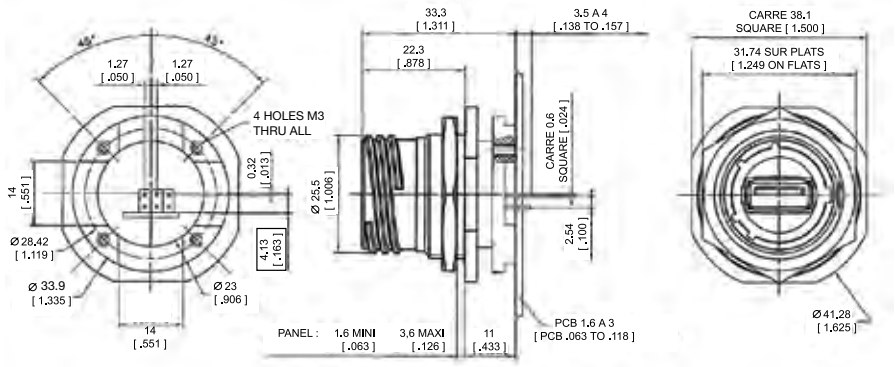

Panel Drilling

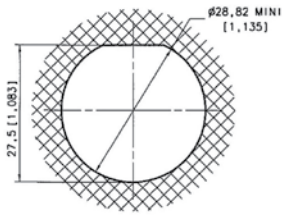

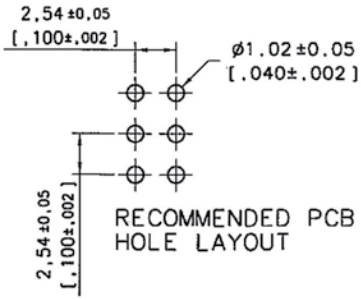

PART NUMBERS:
Jam nut receptacle – Nickel: **USBFTV75NF459** *(coding "A")*
Jam nut receptacle – Olive Drab Cadmium: **USBFTV75GF459** *(coding "A")*
Square flange receptacle – Nickel: **USBFTV25NF459** *(coding "A")*
Square flange receptacle – Olive Drab Cadmium: **USBFTV25GF459** *(coding "A")*

USBBF TV *(USB-B)*

USB Connection System for Harsh Environment

NEW

ROHS COMPLIANT N

USB Field allows you to use a standard USB 2.0 connection in harsh environments :

- Sealed against fluids and dusts (IP68)
- Shock, Vibration and Traction resistant
- No cabling operation in field and no tools required
- Improved EMI protection
- Tri Start Thread coupling mechanism (MIL-DTL-38999 series III type) with anti-decoupling device
- Plug retention in the receptacle: 100N in the axis
- Mating cycles: 500 to 1500

Back terminations available:

- a USB-A receptacle
- solder: 4 tinned holes on the PCB to solder your wires

Applications

- Embedded Computers
- Data Acquisition and transmission in harsh environment
- Railways
- Battelfield Communication Systems
- Navy Systems

Part Number Code

Series **USBB Field TV**	**USBBF TV**	**2**	**1**	**G**
Shell Type **6:** Plug **2:** Square flange receptacle **2PE:** Square flange receptacle with metal backshell *(type 1)* & with metal backshell + plastic gland *(type 2)* **2PEM:** Square flange receptacle metal gland (only for soldering back termination type 2) **7:** Jam nut receptacle **7PE:** Jam nut receptacle with metal backshell *(type 1)* & with metal backshell + plastic gland *(type 2)* **7PEM:** Jam nut receptacle metal gland (only for soldering back termination type 2)				
Back Terminations *(Receptacles only)* **1:** Female USB-A **2:** Solder (4 tinned holes)				
Shells Material & Finish **N:** Aluminium shell - Nickel plating - ROHS compliant **G:** Aluminium shell - Olive Drab Cadmium plating				

Examples:
- Plug-cadmium plating: USBBF TV 6G
- Square FlangeReceptacle-USB-A back terminat° -cadmium plating: USBBF TV 21G
- JamNut Receptacle, solder terminat° -nickel plating: USBBF TV 72N

Back Terminations

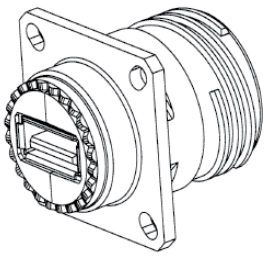

Type 1: Female USB-A

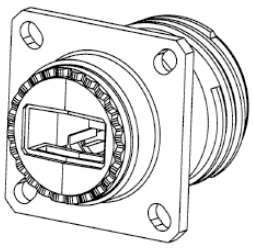

Type 2: Solder (4 tinned holes)

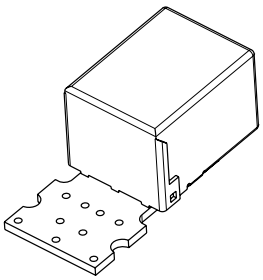

Plug:

- 6 Shell

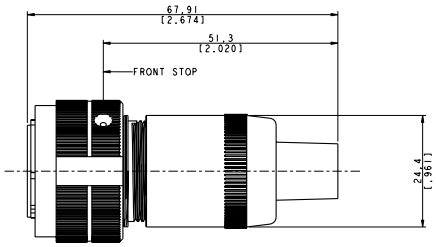

USBBFTV 6 X

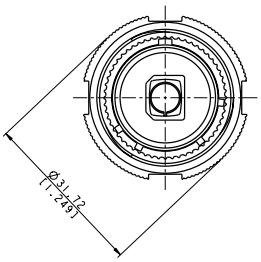

Panel Drilling

Receptacles:

- Shell type 2 - Square flange receptacle

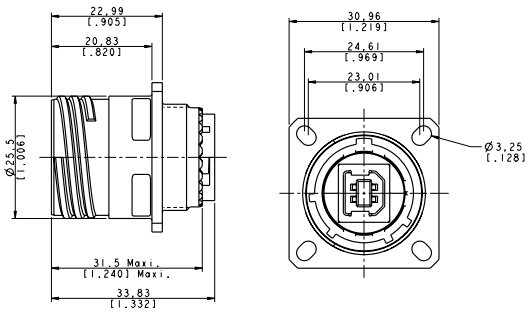

USBBFTV 2 XX

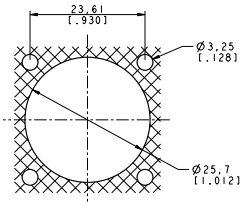

Panel Drilling

- Shell type 7 - Jam nut receptacle

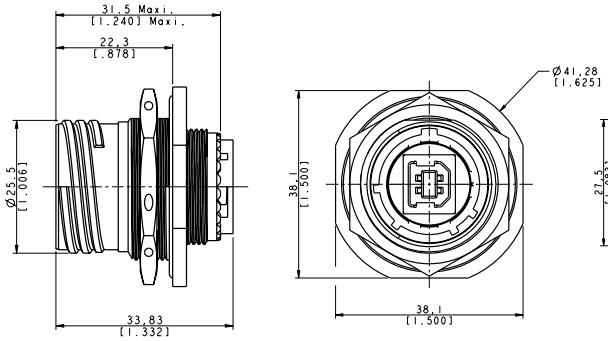

USBBFTV 7 XX

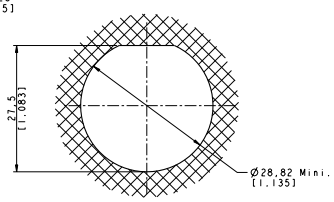

Panel Drilling

- «2PEM» and «7PEM» Shells with Backshell to protect Back termination from dust, shocks and vibration.

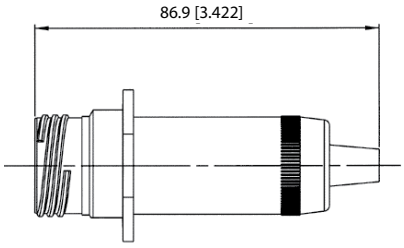

Backshell used with back termination type 1:
USB A receptacle
Same panel drilling as USBBFTV 2xx

USBF TV 2PE / 7PE-1

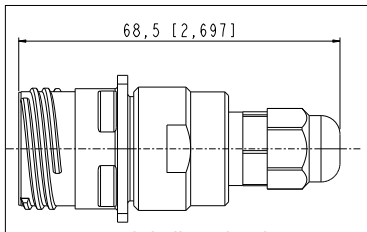

Backshell used with
back termination type 2:
Solder (Sealed – IP68)

USBF TV 2PE(M) / 7PE(M)-2

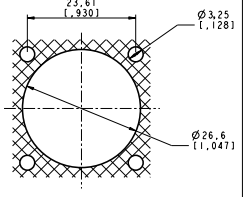

PERCAGE PANNEAU
PANEL DRILLING

Panel Drilling *(for type 2 only)*

Accessories

- **Metallic Caps** (same as USB-A version - see page 31)

	USBF TVC	2	G
Connector Type			
6:	Plug		
2:	Square Flange Receptacle		
7:	Jam Nut Receptacle		
Shells Material & Finish			
N:	Nickel plating - ROHS compliant		
G:	Olive Drab Cadmium plating		

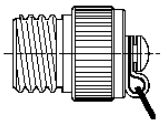

Plug Cap

Receptacle Cap

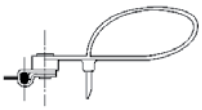

Plug Cap end

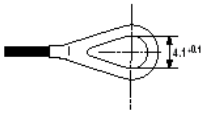

Square flange receptacle cap end

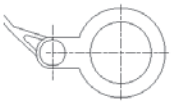

Jam Nut receptacle cap end

- Panel Gasket for square flange receptacle
  (Thickness: 0,8 mm [.031]): JE15

- Receptacle Insert removal tool: USBBF ODE

USBBF TV

Transversally sealed receptacle

NEW

ROHS COMPLIANT N & BZ

With USB Field, you can insert a standard USB 2.0 cordset into a metallic plug which will protect it from shocks, dust and fluids.
No hazardous on-field cabling and grounding!
This metallic plug is connected into a receptacle, using a Tri Start Thread coupling mechanism (MIL-DTL-38999 series III type) with anti-decoupling device for high vibrations.

Applications

- Embedded Computers
- Data Acquisition and transmission in harsh environment
- Railways
- Battelfield Communication Systems
- Navy Systems

Data Transmission

USB Specification 2.0
Data Rate: Up to 480 Mb/s for High Speed USB

MAIN CHARACTERISTICS

- Sealed against fluids and dusts (IP68)
- Shock, Vibration and Traction resistant
- No cabling operation in field and no tools required
- Improved EMI protection
- Tri Start Thread coupling mechanism (MIL-DTL-38999 series III type) with anti-decoupling device
- 2 mechanical Coding / Polarization possibilities by the user (receptacle insert rotation)
- USBF TV plug retention in the receptacle: 100 N in the axis
- Mating cycles: 500 to 1500

Environmental Protection

- Sealing (when mated): IP68 (Temporary immersion)
- Salt Spray: 48 h with Nickel plating
  > 500 h with Olive Drab Cadmium
  1000 h with marine bronze shell
- Fire Retardant / Low Smoke: UL94 V0 and NF F 16 101 & 16 102
- Vibrations: 10 – 500 Hz, 10 g, 3 axes: no discontinuity > 1micro s
- Shocks: IK06: weight of 250 g drop from 40 cm [15.75 in] onto connectors (mated pair)
- Humidity: 21 days, 43°C, 98% humidity
- Temperature Range: - 40°C / +85°C

Part Number Code

Series	USBBF TV	7S	2	G	10	OPEN
USBB Field TV						

Shell Type

2S:	Sealed Square flange receptacle
2PES:	Sealed Square flange receptacle + backshell + plastic gland
2PEMS:	Sealed Square flange receptacle + backshell + metal gland
7S:	Sealed Jam nut receptacle
7PES:	Sealed Jam nut receptacle with backshell
7PEMS:	Sealed Jam nut receptacle + backshell + metal gland

Back Terminations

2:	Rugged USB cable

Shells Plating

N:	Nickel
G:	Olive drab cadmium

USB cable length

03:	30 cm [11.81 inches]
05:	50 cm [19.68 inches]
10:	1 meter [39.37 inches]

USB cable end

A:	Standard USB-A plug
OPEN:	Open USB cable (no connector)

Examples: - Olive Drab Cadmium Jam Nut Receptacle: USBBF TV 7 XX
- Nickel Square Flange Receptacle: USBBF TV 2 XX

USB B Field

SEALED (IP68) USB-B CONNECTION SYSTEM
- USB-B male plug overmolded on USB2.0 cable
- USB-A plug can be used with USBFTV
- USB-B female receptacle with 50 mm wires & 5 way connectors
- Plastic shells
- Thread coupling
- Rear mount Jam Nut receptacle with panel gasket included
- To -20°C +80°C

Applications
- Embedded Computers
- Data Transfer
- Numerical Control Machine

MALE SEALED PLUG USB-B / USB-A CORDSET

FEMALE RECEPTACLE AND CAP

PLUG CORDSET – MALE SEALED USB-B / MALE USB-A *(*)*

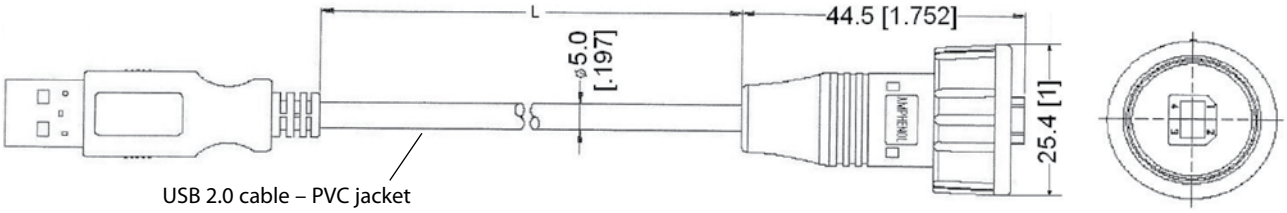

PART NUMBERS:
L = 1000±50mm [39.37±1.97] - P/N: **USBBF6100**
L = 2000±50mm [78.74±1.97] - P/N: **USBBF6200**

(*) To get a sealed USB-A plug, you can use our USB FTV series.

PIN ASSIGNMENTS *(FRONT VIEW)*
1 = RED (AWG 24)
2 = WHITE (AWG 28)
3 = GREEN (AWG 28)
4 = BLACK (AWG 24)
Shield = Drain

RECEPTACLE – FEMALE USB-B

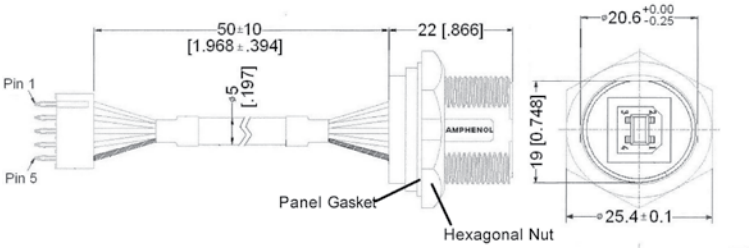

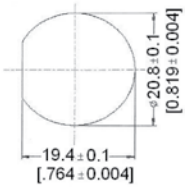

Panel Drilling

JWT CONNECTOR – PITCH 2.5MM
JWT 1 = USB1 = RED (AWG 24)
JWT 2 = USB2 = WHITE (AWG 28)
JWT 3 = USB3 = GREEN (AWG 28)
JWT 4 = USB4 = BLACK (AWG 24)
JWT 5 = USB Shield = YELLOW (AWG 24)

RECEPTACLE & CAP PART NUMBER

RECEPTACLE PN: *USBBF7*

CAP PN: *USBBFC7*

FWF TV

IEEE 1394A Connection System for Harsh Environments

With FW Field, you can insert a standard IEEE1394A cordset into a metallic plug which will protect it from shocks, dust and fluids.
No hazardous on-field cabling and grounding!
This metallic plug is connected into a receptacle, using a Tri Start Thread coupling mechanism (MIL-DTL-38999 series III type) with anti-decoupling device for high vibrations.

Applications
- Embedded Computers
- Video
- Railways
- Battelfield Communication Systems
- Naval & Shipboard Systems
- Robotics & Automation
- Process Control
- Rugged Communications

Data Transmission
IEEE 1394a-2000
400 Mbits/second over 4.5 meters

MAIN CHARACTERISTICS
- No assembly tools required
- Sealed against fluids and dusts (IP68)
- No time-consuming in-field cabling operation necessary
- **Tri-start thread coupling mechanism (MIL-DTL-38999 series III type) with anti-decoupling device**
- FW plug retention in the receptacle: 100 N in the axis
- Mating cycles: 500 to 1500 times
- Improved EMI protection

Environmental Protection
- Sealing (mated): IP68 (Temporary immersion - 1 meter up to 30 minutes)
- Salt Spray: 48 h with Nickel plating
  > 500 h with Olive Drab Cadmium
- Fire Retardant / Low Smoke: UL94 V0 and NF F 16 101 & 16 102
- Vibrations: 10 – 500 Hz, 10 g, 3 axes: no discontinuity > 1micro s
- Shocks: IK06: weight of 250 g drop from 40 cm [15.75 in] onto connectors (mated pair)
- Humidity: 21 days, 43°C, 98% humidity
- Temperature Range: - 40°C / +85°C

Part Number Code

Series **IEEE1394 Field TV**	**FW F TV**	**2**	**1**	**G**
Shell Type **6:** Plug **2:** Square Flange Receptacle **2PE:** Square flange receptacle with metal backshell *(type 1)* & with metal backshell + plastic gland *(type 2)* **7:** Jam Nut Receptacle **7PE:** Jam nut receptacle with metal backshell *(type 1)* & with metal backshell + plastic gland *(type 2)*				
Back Terminations *(Receptacles only)* **1:** IEEE 1394 receptacle **2:** Solder Board (6 tinned holes)				
Shell Plating **N:** Nickel - ROHS Compliant **G:** Olive Drab Cadmium				

Examples:
- Olive Drab Cadmium Plug: FWF TV 6G
- Olive Drab Cadmium Square Flange Receptacle, IEEE 1394 front & back: FWF TV 21G
- Olive Drab Cadmium Jam Nut Receptacle, IEEE 1394 front and back: FWF TV 71G
- Nickel Jam Nut Receptacle, solder board termination: FWF TV 72N

Plug

■ Shell type 6

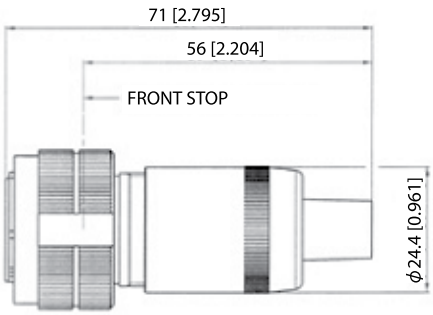

FWF TV 6 X

Receptacles

■ Square flange receptacle
4 mounting holes: Shell type 2

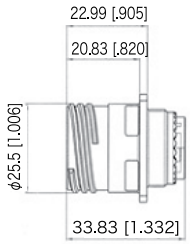

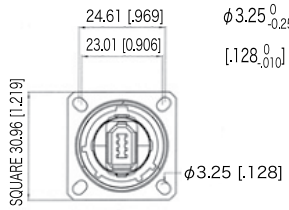

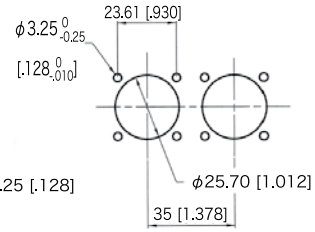

FWF TV 2 XX

Panel Drilling

■ Jam nut receptacle
Hexagonal Nut mounting:
Shell type 7

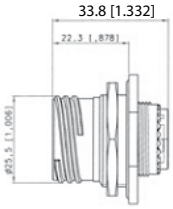

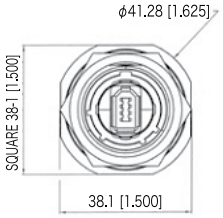

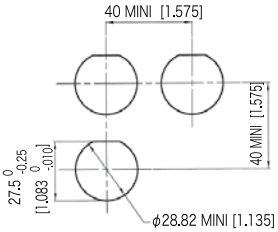

FWF TV 7 XX

Panel Drilling

■ Receptacles with backshell:
Shell type 2PE and 7PE

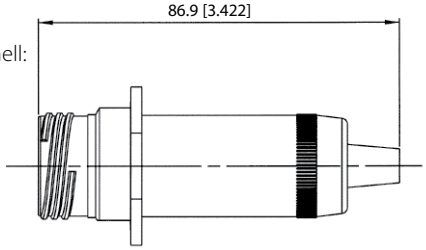

Backshell used with IEEE 1394
Receptacle with back-termination - (Type 1)
Non sealed version
Same panel drilling as FWFTV 2xx

FWF TV 2PE & 7PE Type 1

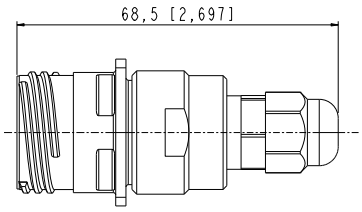

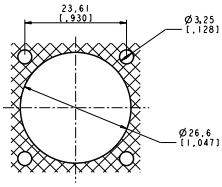

PERCAGE PANNEAU
PANEL DRILLING

Backshell used with PCB
Receptacle with back-termination - (Type 2)
Sealed version - IP67

FWF TV 2PE & 7PE Type 2

Panel Drilling *(for type 2 only)*

Back Terminations

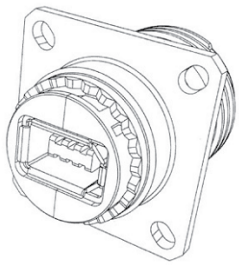

Type 1: IEEE 1394 Receptacle

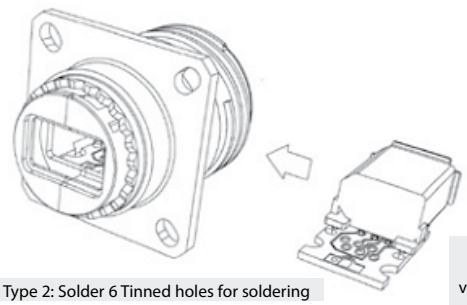

Type 2: Solder 6 Tinned holes for soldering

View of the PCB Type 2 version - with 6 tinned holes for solder termination

FWFTV

Amphenol

Assembly Instructions

Can be used with most IEEE 1394 cordset brands: No tools required!

Plug Assembly

1. If a fully sealed (IP68) assembly is required: Install the white tape around the plug to cover the 4 holes of the overmolding. If there are no holes omit this step.

2. Insert the black O Ring around the front face of the IEEE 1394 plug. This O Ring will ensure the seal.

3. Insert the IEEE 1394 cordset into the metallic backshell.

4. Insert the retention spacer laterally onto the cable (this spacer is soft so as to adapt to various overmolding styles) and slide the IEEE 1394 plug into this retention spacer.

5. Insert the friction ring laterally onto the cable cordset.

6. Insert the IEEE 1394 plug into the metallic circular shell. Note at this step that the main key is used for polarization.

7. Screw the backshell on the plug body. A spanner may be required to fully close the backshell to the circular shell.

Important Note: The sealing of the connector is not done by the black retention spacers which are slotted, but rather by the front face O-Ring (Fig 2).

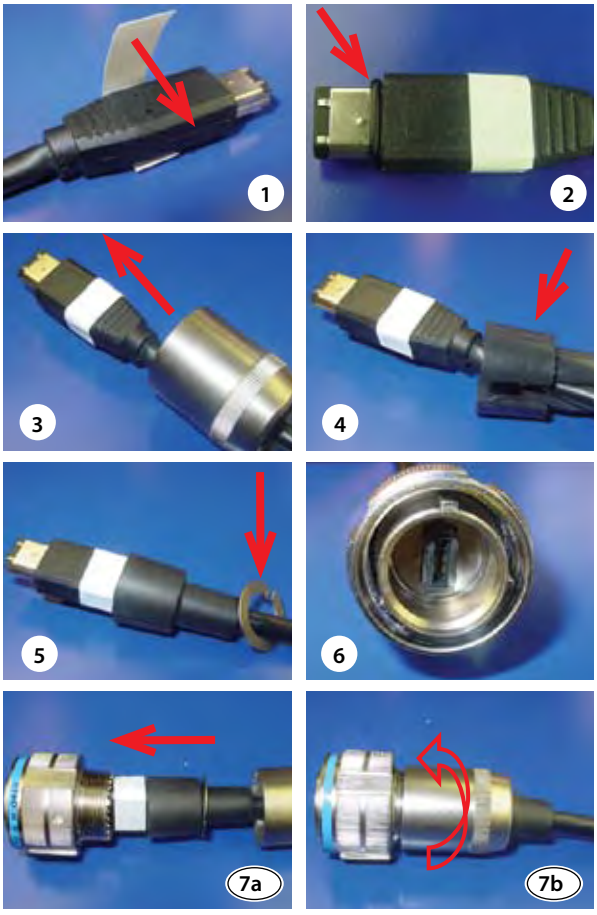

Receptacle Assembly

To Solder your cable onto the PCB:
1. Attach the 2 metallized plastic inserts around the PCB (Fig 1a & 1b).
2. Insert the IEEE 1394 module from the rear of the connector.

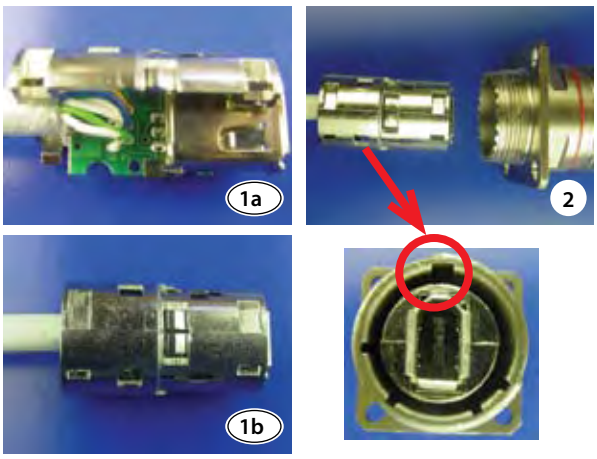

Removing Modules

1. Insert the removal tool FWF ODE from the front
2. Push the module back with thumb.

Accessories

- **Metallic Caps**

FWF TVC	2	G
Connector Type **6:** Plug **2:** Square Flange Receptacle **7:** Jam Nut Receptacle		
Shell plating **N:** Nickel - ROHS Compliant **G:** Olive Drab Cadmium		

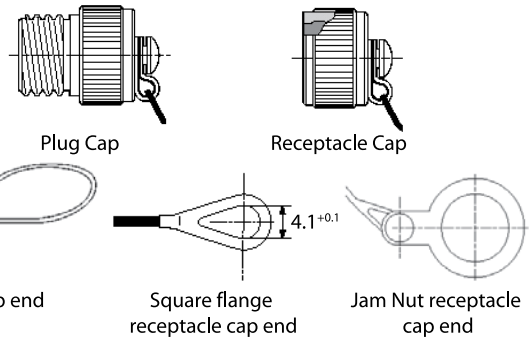

- Panel Gasket for square flange receptacle (Thickness: 0,8 mm [.031]): JE15

- Receptacle Insert removal tool: FWF ODE

SELF CLOSING CAP

For RJ Field, USB and IEEE1394 receptacles

This Self Closing Cap automatically protects the RJ Field square flange receptacles (MIL-C-26482 type), protecting your system from dust and water projections. The same cap can be used to protect USB and IEEE1394 receptacles. A spring automatically closes the upper part of the cap when either the RJ Field plug, RJ45 cordset, USB or IEEE1394 cordset, or USB key are removed from the receptacle.

Sealing level IP54 (Splash and dust Proof)

RJF 21 X SCC

Version: RJ45
RJF 21N SCC Nickel plated shell and metallized inserts (EMI)
RJF 21B SCC Black coated shell and blank insert

Remark: Could be used with RJF series rugged plug *(see page 10)*

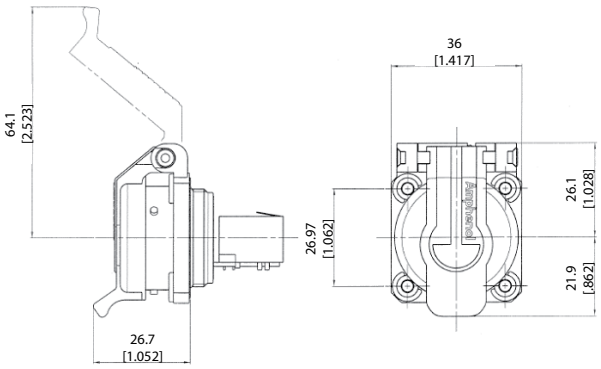

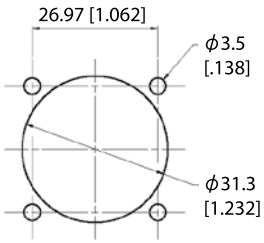

Panel Drilling

USBF 21 X SCC

Version: USB-A *(front and back termination)*
USBF 21N SCC Nickel plated shell and metallized inserts (EMI)
USBF 21B SCC Black coated shell and blank insert

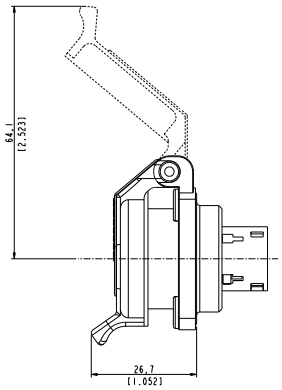

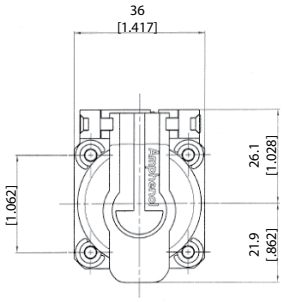

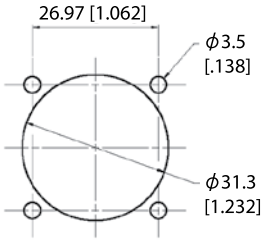

Panel Drilling

USBBF 21 X SCC

Version: USB-B *(front in USB-B and back termination in USB-A)*
USBBF 21N SCC Nickel plated shell and metallized inserts (EMI)
USBBF 21B SCC Black coated shell and blank insert

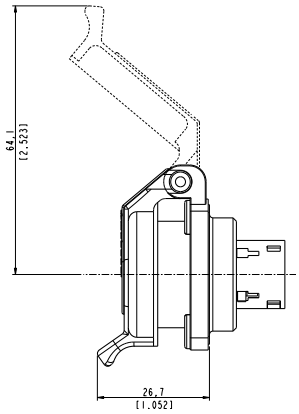

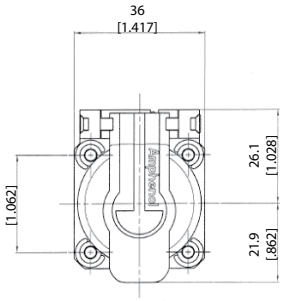

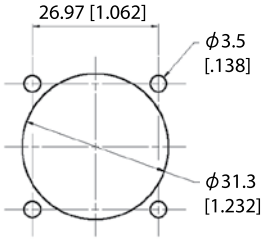

Panel Drilling

FWF 21 X SCC

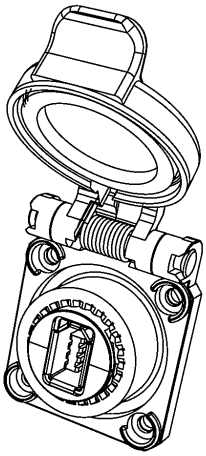

Version: IEEE1394
FWF 21N SCC Nickel plated shell and metallized inserts (EMI)
FWF 21B SCC Black coated shell and blank insert

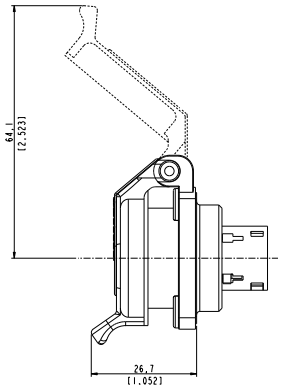

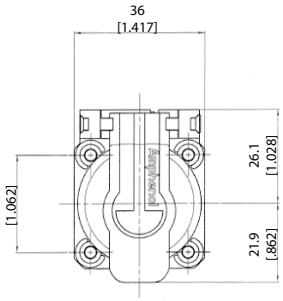

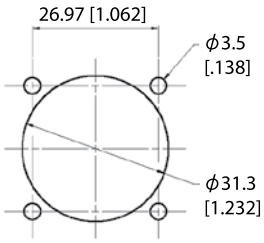

Panel Drilling

- Note: Panel gasket with any of these receptacles: JE18

RJ11F

Rugged RJ11/RJ12 Connection System for Harsh Environment

RJ11Field allows you to use a standard phone RJ11 / RJ12 connection in harsh environments. With the patented RJStop® system you can use a standard RJ11 / RJ12 cordset in a metallic plug which will protect it from shocks, dust and fluids. **No hazardous on-field cabling!**

MAIN CHARACTERISTICS

- **Bayonet coupling** ("Audible & Visual" coupling signal)
- **Robust metallic shells based on MIL-DTL-26482 H**
- 4 mechanical user-defined coding / Polarization settings (insert rotation)
- RJ11 cordset retention in the plug: 100 N in the axis
- Mating cycles: 500 min

Applications

- Industrial applications
- Battlefield communication

Environmental Protection

- Sealing: IP68
- Salt Spray: 48 h with Nickel plating
  > 96 h with black coating
  > 500 h with Oliv Drab Cadmium
- Fire Retardant / Low Smoke: UL94 V0 and NF F 16 101 & 16 102
- Vibrations: 10 – 500 Hz, 10 g, 3 axes: no discontinuity > 10 nano s.
- Shocks: IK06: weight of 250 g drop from 40 cm [15.75 in] onto connectors *(mated pair)*
- Humidity: 21 days, 43°C, 98% humidity
- Thermal Shock: 5 cycles at - 40°C / +100°C
- Temperature Range: - 40°C / +85°C

Part Number Code

Series RJ11Field	RJ11F	2	2	B
Shell Type 6: Plug, Plastic Gland 2: Square Flange Receptacle 7: Jam Nut Receptacle				
Back Terminations (For Receptacles only) 1: Female RJ11 2: Solder (6 tinned holes)				
Shell Finishes B: Black Coating - ROHS Compliant N: Nickel - ROHS Compliant G: Olive Drab Cadmium				

Examples:
- Black Plug: RJ11F 6 B
- Black square flange receptacle, Female RJ11 Back termination: RJ11F 2 1 B
- Nickel Jam Nut Receptacle, solder termination: RJ11F 72 N

Accessories

- Metallic cap

	RJ11FC	2	B
Connector Type 6: Plug 2: Square Flange Receptacle 7: Jam Nut Receptacle			
Finishes B: Black Coating - ROHS Compliant N: Nickel - ROHS Compliant G: Olive Drab Cadmium			

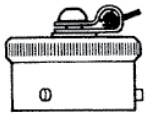

Plug cap

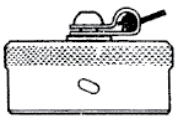

Recaptacle cap

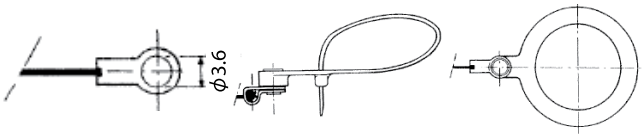

Square Flange type « 2 »

Plug Cap end type « 6 »

Jam nut receptacle type « 7 »

- Panel gasket for square flange « 2 »
  thickness: 0,6 mm P/N: JE 14

- Insert removal tool for receptacle and plug
  P/N = RJ11F ODE

Plug

■ Shell type 6 with Plastic Gland

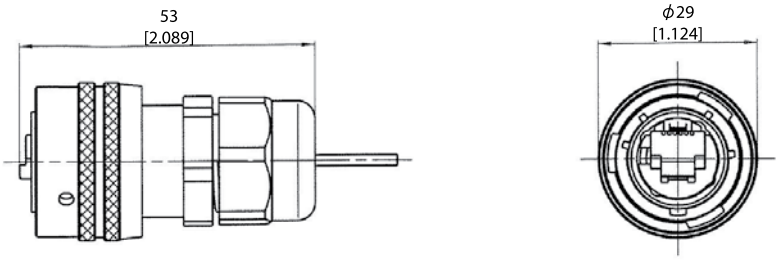

RJ11F 6 X

Receptacles

■ Square flange receptacle
4 mounting holes: Shell type 2

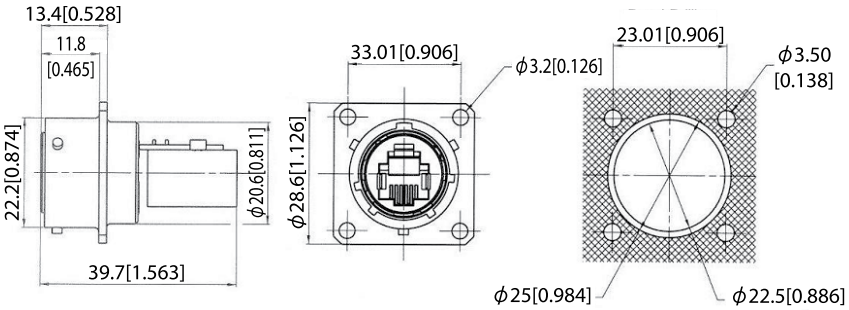

RJ11F 2 XX

Panel Drilling

■ Jam nut receptacle
Hexagonal Nut mounting: Shell type 7

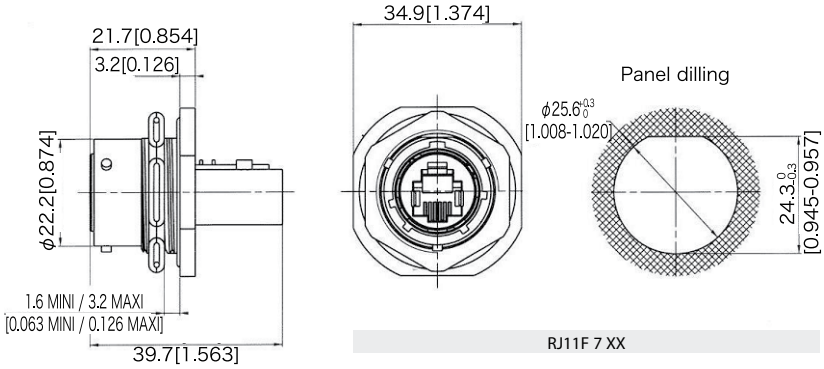

RJ11F 7 XX

Back Terminations

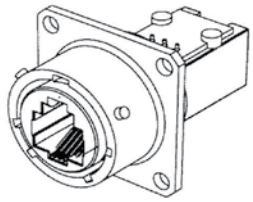

Type 1: Female RJ11 / RJ12

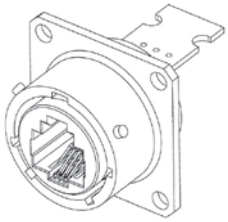

Type 2: Solder 6 Tinned through holes to solder your cable

Assembly instructions

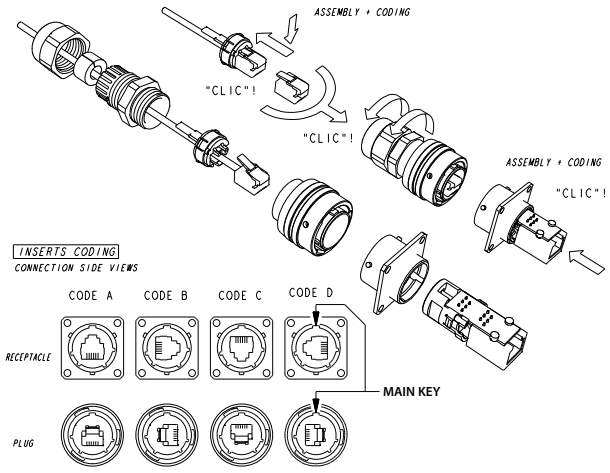

Easy and Safe: No field cabling tools required

1. Pass the RJ11 / RJ12 plug « A » through the plastic gland « B »
2. Lateraly slide the insert « C » on the cable
3. Fix the RJ11 / RJ12 plug « A » in the insert « C », pushing on the lever
4. Insert in the metallic housing « D »
5. Tighten the plastic gland « B »

MTRJF TV

Transform your MTRJ patchcord into an Environmental Connector

With MTRJFTV you can use a standard MTRJ patchcord in a metallic plug which will protect it from shocks, dust and fluids.

No hazardous on-field cabling!

The MTRJ Field offers an easy system to upgrade from a standard to an environmental MTRJ.

- Sealed against fluids and dust (IP68)
- Shock, Vibration proof,
- No cabling operation in field and no tools required for installation

Applications

- Railways
- Base Station
- Military communication
- Navy

MECHANICAL CHARACTERISTICS

- Number of Channels: 1/2/4
- Typical Insertion Loss: 0,5db in MM
- Durability: 500 mating/unmating cycles (changes for<0,2 db)

Part Number Code

Serie MTRJ Field TV	MTRJF TV	6M	C	G	N

Shell Type

6:	Plug with metal backshell, plastic PG clamp
6M:	Plug with metal backshell and metal PG clamp
2:	Square flange receptacle
2PE:	Square flange, metal backshell and plastic PG clamp
2PEM:	Square flange, metal backshell and metal PG clamp
7:	Jam nut receptacle
7PE:	Jam nut, metal backshell and plastic PG clamp
7PEM:	Jam nut, metal backshell and metal PG clamp

Cable Type

Only for receptacle

0:	Receptacle without backshell

Only for plug

C:	Mini round cable 2,8 mm
D:	Flat duplex cable 1,6 mm
S:	Duplex zipcord 1,6 mm
T:	Flat duplex cable + Duplex zipcord for 1,6 mm - 2mm - 2,8mm

Shell Finish

N:	Nickel plated
G:	Olive drab cadmium plated
B:	Bronze
D:	Black zinc cobalt
Z:	Olive drab zinc cobalt

Polarization

N:	Normal
A / B / C / D / E	

Cap Series	B	EC	N	TV	W	13

Protective cap type

EC:	For square flange receptacle
ER:	For jam nut receptacle
F:	For plug

Wire type

N:	Nylon cord
Blank:	Metallic chain

TV: Series

Shell finish

B:	Bronze
F:	Electroless nickel plated, aluminium version
W:	Olive drab cadmium plated, aluminium version
D:	Black zinc cobalt
Z:	Olive drab zinc cobalt

- **Requested information to order MTRJ Field Patchcord**

Plug MTRJ:	Male /Female
Type of fiber:	50/125, 62,5/125, 9/125
Patchcord length:	ex 10.5m
Drawing:	description of the product

Contact us for other configuration

Dismounting Tool Ordering Information

MTRJFTV DM TOOL

Line drawings *(Dimensions in mm)*

■ Plug (MIL DTL 38 999 series III Size 13)

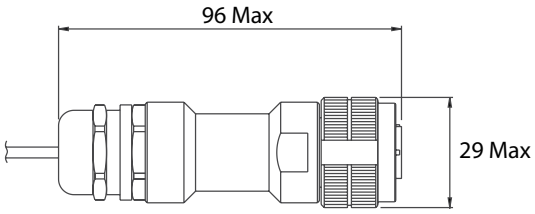

MTRJ FTV 6 X

■ Receptacle (MIL DTL 38 999 series III Size 13) with backshell

Jam Nut receptacle with backshell

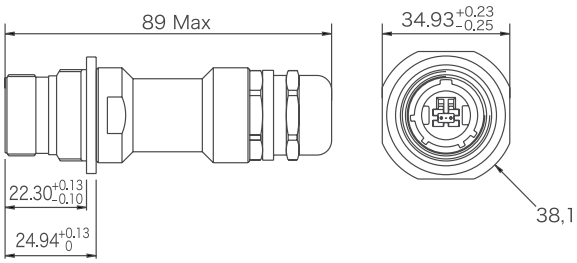

MTRJ FTV 7PE/7PEM

Square flange receptacle with backshell

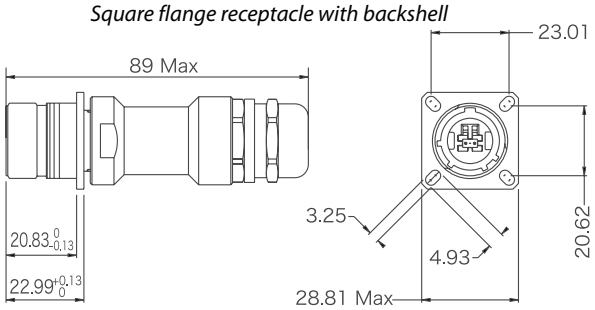

MTRJ FTV 2PE/2PEM

■ Square Flange Receptacle (MIL DTL 38 999 series III Size 13)

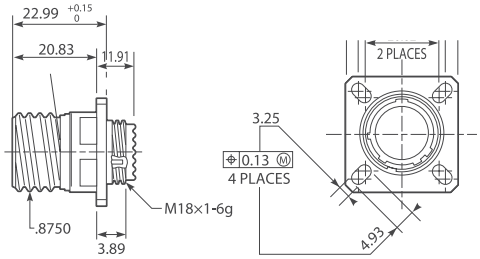

MTRJ FTV 2 XXX

Square flange receptacle rear panel mounting

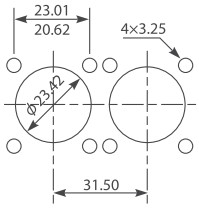

Square flange receptacle front panel mounting

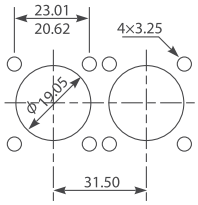

Panel Drilling

■ Jam Nut Receptacle (MIL DTL 38 999 series III Size 13)

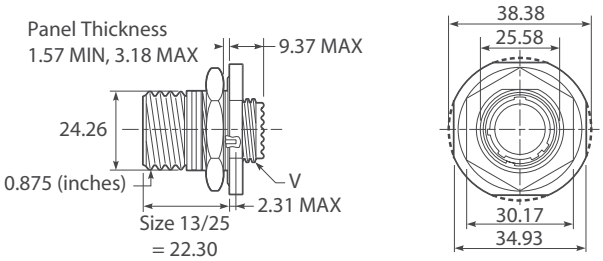

MTRJ FTV 7 XXX

Jam nut receptacle rear panel mounting

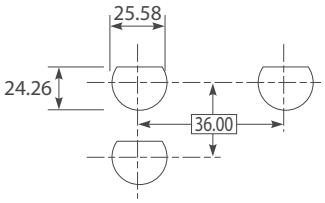

Panel Drilling

Protective caps

Protective cap for plug (nylon cord)

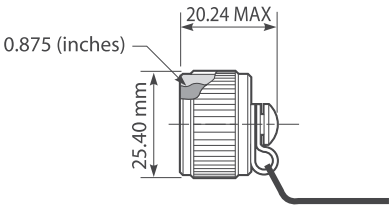

Protective cap for receptacles (nylon cord)

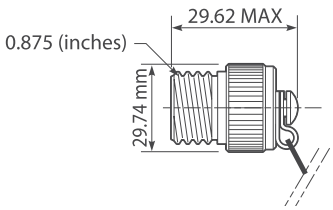

LC FIELD

Transform your LC patchcord into an Environmental Connector

The LC Field offers an easy system to upgrade from a standard to an environmental LC.

- Sealed against fluids and dust (IP68)
- Shock, Vibration proof
- No cabling operation in field and no tools required for installation (except 1,6mm and 2mm zipcord cable)

With the patented RJStop ® system you can use a standard LC patchcord in a metallic plug which will protect it from shocks, dust and fluids. **No hazardous on-field cabling!**

Applications

- Railways
- Base Station
- Military communication
- Navy

MECHANICAL CHARACTERISTICS

- Number of Channels: 2
- Typical Insertion Loss: 0,5db in MM and SM
- Durability 500 mating/unmating cycles (changes for<0,2 db)

Part Number Code

Serie Optical connector type	LCF TV	6M	D	G	N

Shell Type
- 6M: Plug with metal backshell and metal PG clamp
- 2: Square flange receptacle without backshell
- 7: Jam nut receptacle without backshell

Cable Type

Only for plug
- D: Flat duplex cable 1,6 mm
- E: Duplex zipcord 1,6 mm
- F: Flat duplex cable 2 mm
- G: Duplex zipcord 2 mm
- H: Flat duplex cable 2,8 mm
- I: Duplex zipcord 2,8 mm
- T: Flat duplex cable + Duplex zipcord for 1,6 mm - 2 mm - 2,8 mm

Only for receptacle (no backshell available for receptacle)
- 0: Receptacle without backshell

Shell Finish
- N: Nickel plated
- G: Olive drab cadmium plated
- B: Bronze
- D: Black zinc cobalt
- Z: Olive drab zinc cobalt

Polarization
- N: Normal
- A / B / C / D / E

Cap Series	B	EC	N	TV	W	19

Protective cap type
- EC: For square flange receptacle
- ER: For jam nut receptacle
- F: For plug

Wire type
- N: Nylon cord
- Blank: Metallic chain

TV: Series

Shell finish
- B: Bronze
- F: Electroless nickel plated, aluminium version
- W: Olive drab cadmium plated, aluminium version
- D: Black zinc cobalt
- Z: Olive drab zinc cobalt

Corresponding connector shell size: 19

Requested information to order LC Field Patchcord

Type of connector:	Male /Female
Type of fiber:	50/125, 62,5/125, 9/125
Patchcord length:	ex 10.5m
Drawing:	description of the product

Contact us for other configuration

Tools informations:

Mounting Tools:

LCFTV MO TOOL: LC FIELD Mounting tools

Dismounting Tools:

LCFTV DM TOOL: LC FIELD Dismounting tools
(To dismount the LC you need to use both dismounting and mounting tools)

Line drawings *(Dimensions in mm)*

■ Plug (MIL DTL 38 999 series III Size 19)

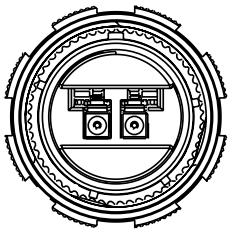

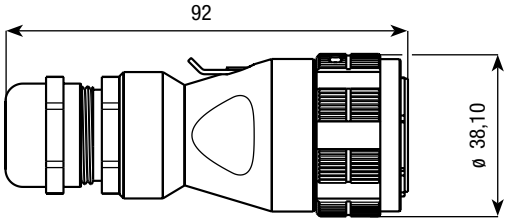

■ Square Flange Receptacle (MIL DTL 38 999 series III Size 19)

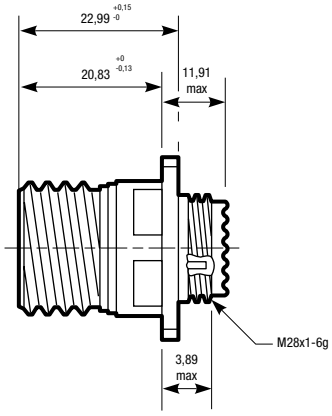

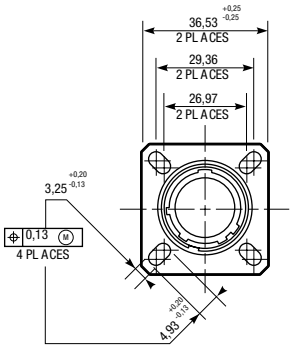

Square flange receptacle rear panel mounting

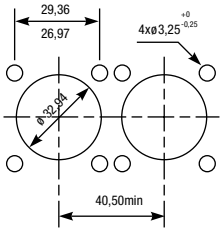

Square flange receptacle front panel mounting

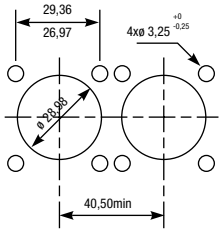

Panel Drilling

■ Jam Nut Receptacle (MIL DTL 38 999 series III Size 19)

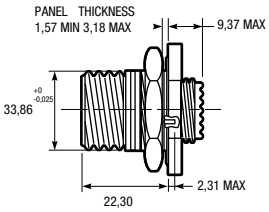

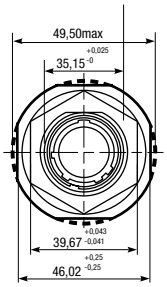

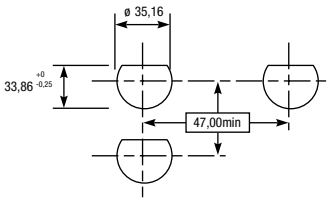

Jam nut receptacle rear panel mounting

Panel Drilling

Protective caps

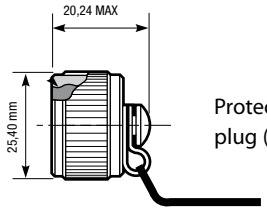

Protective cap for plug (nylon cord)

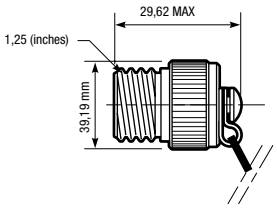

Protective cap for receptacles (nylon cord)

RJFTVX, USBFTVX, RJ11FTVX

NEW

RJ45,USB, RJ11/12 explosion proof solutions for Zone 2

Amphenol Atex Field Bus range is designed for device group II category 3G. According to EN60079-15 it may be operated within zone 2 and class I, Division 2, as low power non sparking connectors.

RJFTVX • Rugged and sealed RJ45 connector

RJFTVX allows you to use an Ethernet Class D / Cat. 5e connection for 10 BaseT, 100 BaseTx or 1000 BaseT networks in ATEX zone 2 environments. With the patented RJStop system you can use a standard RJ45 cordset in a metallic plug which will protect it from shocks, dust and fluids. RJFTVX features the same main characteristics than RJFTV series (see page 14)

CHARACTERISTICS

Ex marking	II3G ExnAIIT6 X
Operating temperature range	-40°C / +60°C
Voltage	60 Veff max
Power	20 W max
Outside cable diameter	6mm to 12mm
Sealing	IP68
Data transmission	10 BaseT, 100 BaseTX & 1000 BaseT networks. Cat. 5e per TIA/EIA 568B & Class D per ISO/IEC 11801

RJFTVX6 PLUG

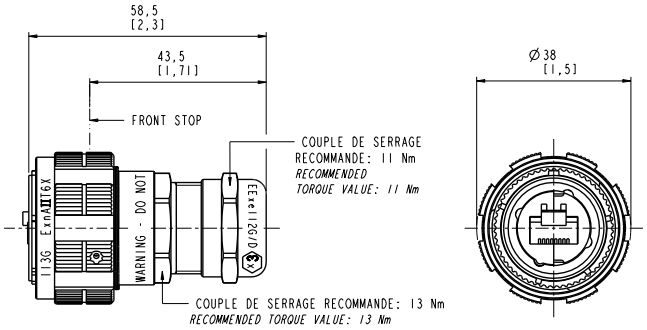

PART NUMBERS:

Nickel Plated plug: **RJFTVX6MN**
Olive drab cadmium plug**: RJFTVX6MG**
IP68 metallic cap: **RJFTVC6N**
IP68 metallic cap: **RJFTVC6G**

RJFTVX2 receptacle

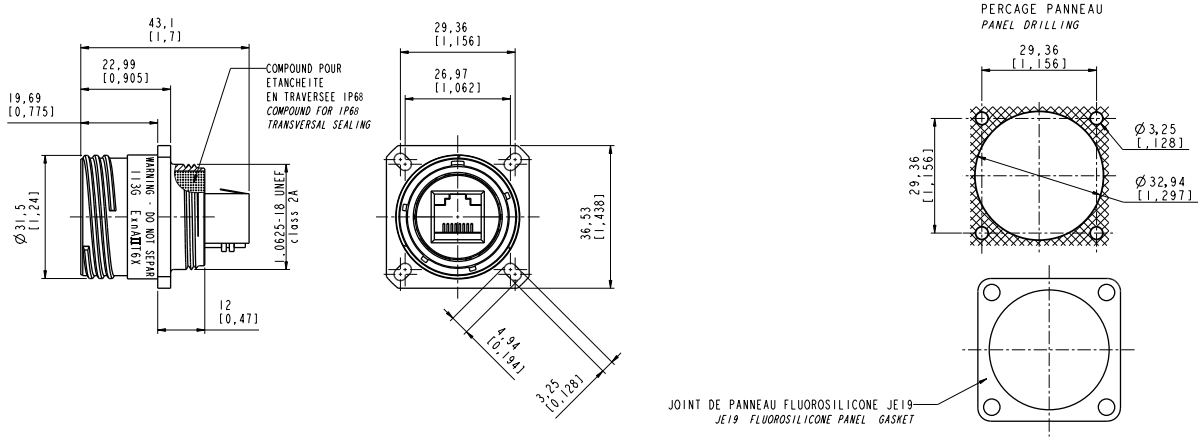

PART NUMBERS:

RECEPTACLE
Nickel Plated • RJ45 back termination • coding A-: **RJFTVX2SA1N**
Olive drab cadmium • RJ45 back termination • coding A: **RJFTVX2SA1G**

RECEPTACLE CAP
Nickel: **RJFTVC2N**
Olive drab cadmium: **RJFTVC2G**

RJFTVX7 receptacle

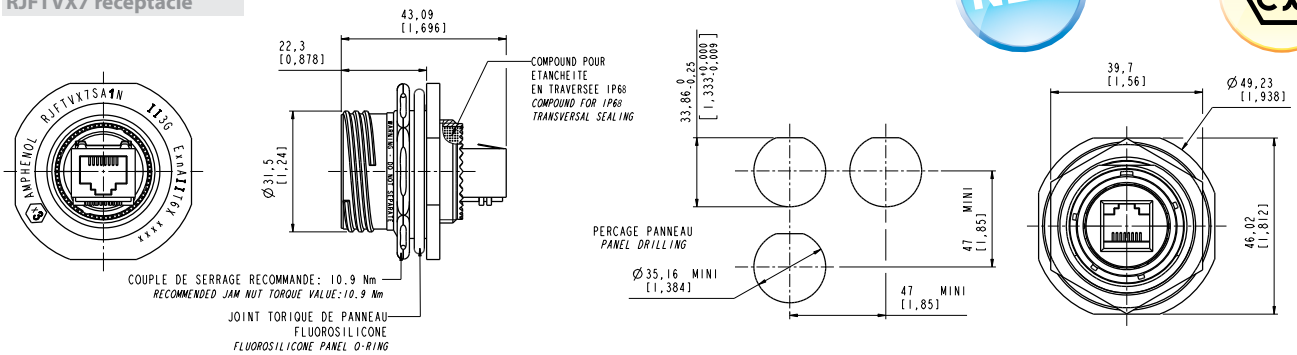

PART NUMBERS:

RECEPTACLE

Nickel Plated • RJ45 back termination • coding A-: **RJFTVX7SA1N**

Olive drab cadmium • RJ45 back termination • coding A: **RJFTVX7SA1G**

RECEPTACLE CAP

IP68 metallic cap: **RJFTVC7N**

IP68 metallic cap: **RJFTVC7G**

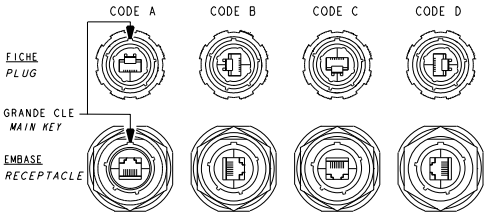

REMARK: As receptacles are compounded (IP68 transversally sealing), coding position has to be specified in the part number: "A" (standard), "B", "C" or "D".

Receptacles can be provided with RJ45 cordsets.
There are 4 standard lengths as described hereunder *(with coding "A")*:

Nickel plated / 0,3 meters RJ45 cordsets: RJFTVX2SA2**N**03100BTX

Nickel plated / 0,5 meters RJ45 cordsets: RJFTVX2SA2**N**05100BTX

Nickel plated / 1,0 meters RJ45 cordsets: RJFTVX2SA2**N**10100BTX

Nickel plated / 1,5 meters RJ45 cordsets: RJFTVX2SA2**N**15100BTX

For Olive Drab Cadmium plating replace the "N" with a "G" in the P/N.

USBFTVX • Rugged and sealed USB connector

With USBFTVX, you can insert a standard USB 2.0 cordset into a metallic plug which will protect it from shocks, dust and fluids. This range is fitted to be used in Atex zone 2 environments This metallic plug is connected into a receptacle, using a Tri Start Thread coupling mechanism (MIL-DTL-38999 series III type) with anti-decoupling device for high vibrations. USBFTVX features the same main characteristics than USBFTV series (see page 25)

CHARACTERISTICS

Ex marking	II3G ExnAIIT6 X
Operating temperature range	-40°C / +70°C
Voltage	60 Veff max
Power	20 W max
Outside cable diameter	4mm to 6mm
Sealing	IP68
Data transmission	USB 2.0 up to 480 Mb/s

USBFTVX6 PLUG

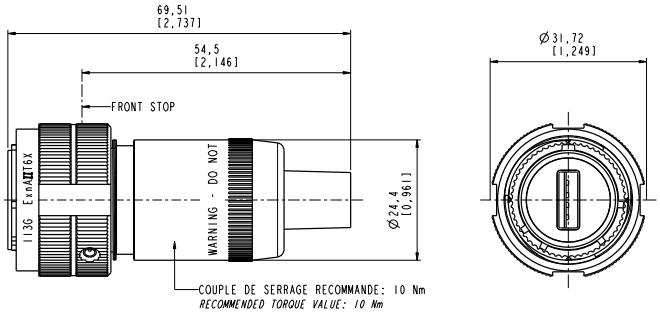

PART NUMBERS:

PLUG

Nickel: **USBFTVX6N**

Olive drab cadmium: **USBFTVX6G**

PLUG CAP

Nickel: **USBFTVC6N**

Olive drab cadmium: **USBFTVC6G**

USBTVX2 & USBTVX2 receptacles

Square Flange Receptacle Type USBFTV2

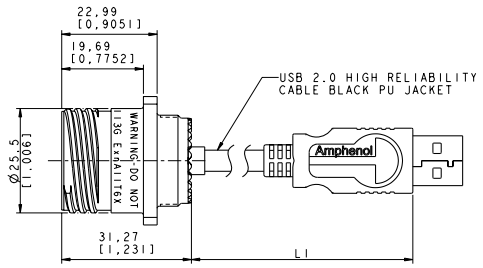

Cable end Type "A" (Standard USB "A" Plug)

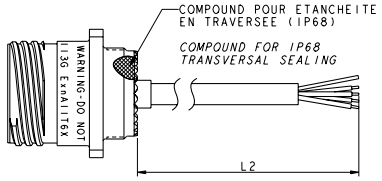

Cable end Type "OPEN" (No connector)

Jam Nut Receptacle Type USBFTV7

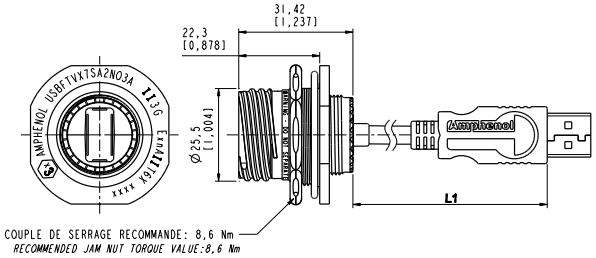

Cable end Type "A" (Standard USB "A" Plug)

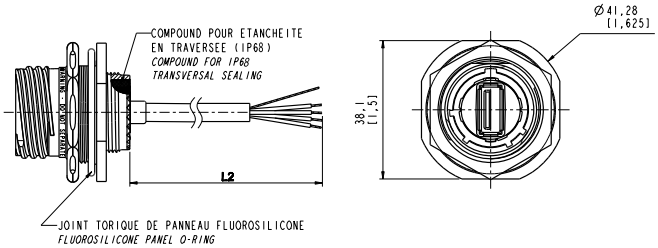

Cable end Type "OPEN" (No connector)

RECEPTACLE CAPS PART NUMBERS:

Nickel plated cap for USBFTVX2: **USBFTVC2N**
Nickel plated cap for USBFTVX7: **USBFTVC7N**

Olive drab cadmium cap for USBFTVX2: **USBFTVC2G**
Olive drab cadmium cap for USBFTVX7: **USBFTVC7G**

Series **USB Field TV**	**USBF TVX**	**2S**	**A**	**2**	**N**	**03**	**A**

Shell Type
2S : Square flange receptacle **7S:** Jam nut receptacle

Coding
"A" (Standard) or "B"

Back Terminations
2: Rugged USB cable

Shells Plating
N: Nickel **G:** Olive drab cadmium plating

USB cable length
03: 30 cm [11.81 inches] **05:** 50 cm [19.68 inches] **10:** 1 meter [39.37 inches]

USB cable end
A: Standard USB-A plug **OPEN:** Open cable (no connector)

RJ11FTVX • Rugged and sealed RJ11/12 connector

RJ11FTVX allows you to use a standard phone RJ11 / RJ12 connection in Atex zone 2 environments. With the patented RJStop® system you can use a standard RJ11 / RJ12 cordset in a metallic plug which will protect it from shocks, dust and fluids.

CHARACTERISTICS

Ex marking	II3G ExnAIIT6 X
Operating temperature range	-40°C / +60°C
Voltage	60 Veff max
Power	20 W max
Outside cable diameter	4mm to 5.5mm
Sealing	IP68
Coupling mechanism	Tri Start thread with anti-decoupling device (MIL-DTL-38999 series III)
Mating cycles	500 min
Salt spray	48h with nickel plating / 500 h with oliv drab cadmium plating
Coding	4 mechanical user-defined coding / Polarization settings (insert rotation)
Fire retardant / Low Smoke	UL94 V0 and NF16 101 & 16 102
R11 cordset retention in the plug	100 N in the Axis

RJ11FTVX6 PLUG

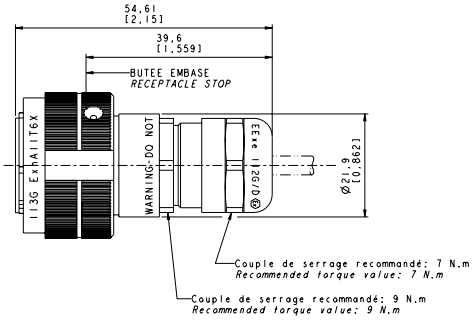

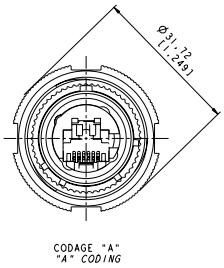

PART NUMBERS:

PLUG
Nickel plated: **RJF11TVX6MN**
Olive drab cadmium: **RJ11FTVX6MG**

CAP
Nickel plated: **RJ11FTVC6N**
Olive drab cadmium: **RJ11FTVC6G**

RJ11FTVX2

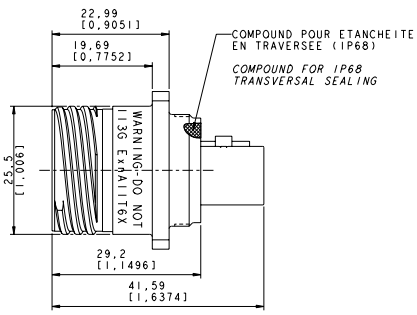

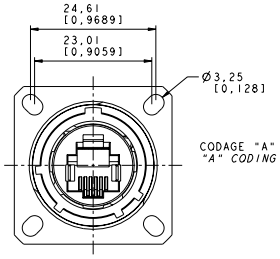

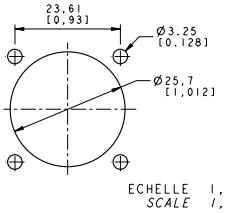

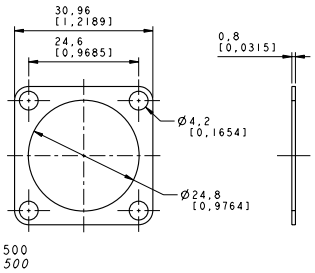

PART NUMBERS:

RECEPTACLE
Nickel Plated - Female RJ45 back termination – coding A-: **RJ11FTVX2SA1N**
Olive drab cadmium - Female RJ45 back termination – coding A: **RJ11FTVX2SA1G**

RECEPTACLE CAP
Nickel plated: **RJ11FTVC2N**
Olive drab cadmium: **RJ11FTVC2G**

RJ11FTVX7

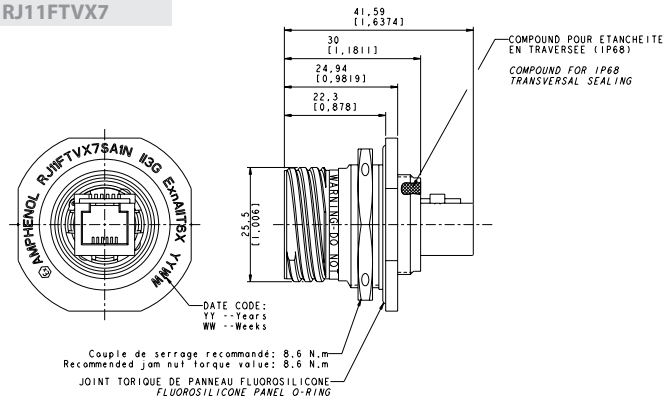

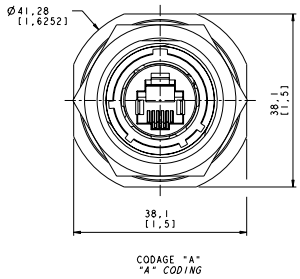

PART NUMBERS:

RECEPTACLE
Nickel Plated - Female RJ45 back termination - coding A-: **RJ11FTVX7SA1N**
Olive drab cadmium - Female RJ45 back termination - coding A: **RJ11FTVX7SA1G**

RECEPTACLE CAP
Nickel: **RJ11FTVC7N**
Olive drab cadmium: **R11JFTVC7G**

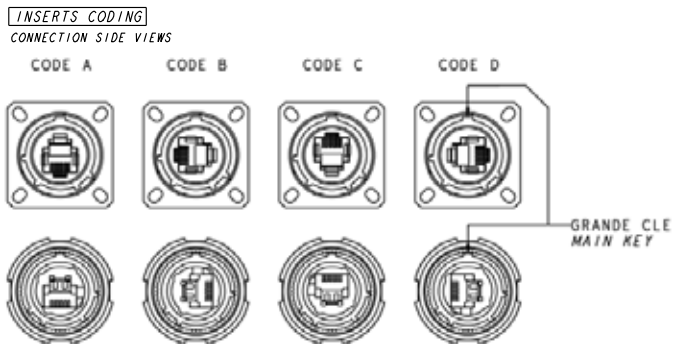

REMARK:

As receptacles are compounded (IP68 transversally sealing), coding position has to be specified in the part number: "A" (standard), "B", "C" or "D".

RJ SWITCH

Industrial Gigabit Ethernet Switch IP30

NEW

ROHS COMPLIANT

Applications

- Factory Automation
- Robotics
- Process Control
- Transportation Systems
- Data Acquisition & Transmission

INDUSTRIAL RUGGED ETHERNET SWITCH

Amphenol offers a full range of Rugged Ethernet switches for industrial use. These switches are specifically designed for industrial applications where Real-Time is a key requirement. The wide range, from unmanaged Plug & Play switches to those managed with fiber optics ports, will fulfill all your needs. This family of switches, IP30 rated, is suitable for both Din-Rail or flat panel mounting. This is an easy way to make the Ethernet networks of your manufacturing site, automation or control units deterministic.

This wide range of Ethernet switches is available with following features:

- Unmanaged, Real-Time Ring and Managed models
- RJ45 ports and up to two fiber optics ports (mutlimode or singlemode)
- 5 or 9 port models
- **Up to 3 Gigabit ports are offered**

Dimensions *(example for 5 Port Ring Models)*

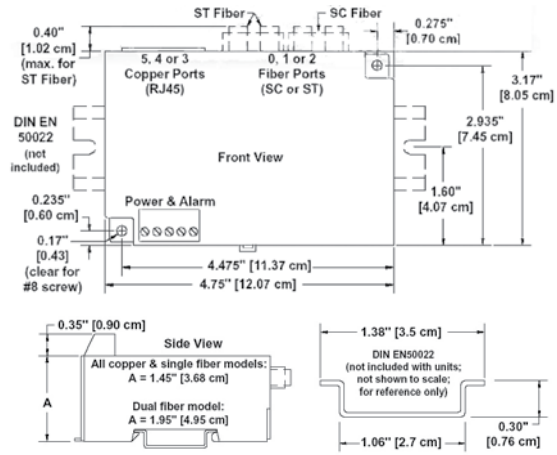

Power and alarm wiring

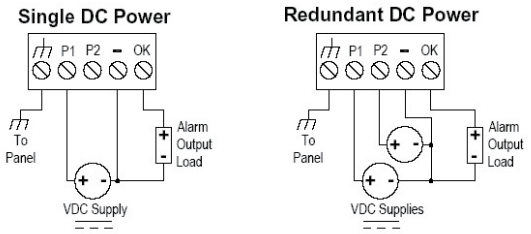

KEY FEATURES

- Redundant power inputs with surge/spike protection
- Ultra reliable 1,000,000 hours MTBF
- Hazardous location: operation in Zone 2
- Wide operating temperature range of –40°C to 70/85°C
- Rugged metal packaging with DIN rail or direct panel mounting
- Auto-detecting, auto-crossover and auto-polarity
- Full-Duplex operation with flow control (no collisions!)
- Ring Switch Networking Features
  - Real-Time Ring for ultra-fast fault-tolerant loops
  - Recovery time of 30 ms + 5 ms per hop!
  - Ideal for deterministic systems and PLCs
  - Real-time traffic prioritization
  - Port mirroring for traffic diagnostic
  - 3 ports 10/100/1000 - BaseT(X) (*)
- Managed Switch Networking Features
  - Rapid Spanning Tree (RSTP) for fast redundant rings
  - Priority queuing for real-time performance (QoS and CoS)
  - SNMP v1 and v2 for network management
  - SNMPv3 for authentication and encryption
  - IGMP for multicast filtering
  - VLAN for traffic segregation
  - User friendly configuration (web, Telnet, RS232)
  - Encryption using HTTPS, SSL, SSH, SNMPv3
  - Message filtering to stop broadcast storms
  - RMON and port mirroring for diagnostics
  - The Power of Linux Inside
  - 3 ports 10/100/1000 - BaseT(X) (*)

Description

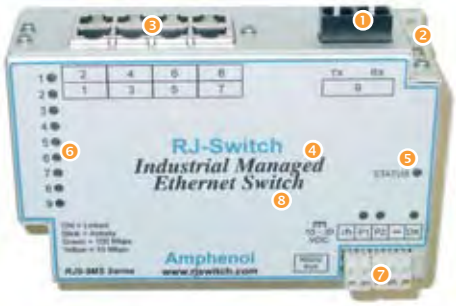

1. SC or ST fiber connector (1, 2 or none)
2. DIN-Rail or Panel Mounting Fixture
3. 5 or 9 connectors (RJ45, SC or ST fiber)
4. Unmanaged, Ring or Managed Capability
5. Indicators for Power, Alarm Output Status
6. Indicators for Link Status and Datarate
   - 10 Mbps
   - 100 Mbps
   - 1000 Mbps
7. Terminal block for Redundant Power Inputs + Alarm Output
8. IP30 Iridized Aluminum Enclosure

(*) depend on models

MANAGED, RING & UNMANAGED SWITCH FEATURES

IEEE Ethernet Standards

Models	Features	802.3/u	802.3x	802.3z	802.1p	802.1D	802.1w	802.1Q
RJS 9ES	Unmanaged	✓	✓					
RJS 9RS	RING	✓	✓		✓			
RJS 9RG	RING - Gigabit	✓	✓	✓	✓			
RJS 9MS	Managed	✓	✓		✓	✓	✓	✓
RJS 9MG	Managed - Gigabit	✓	✓	✓	✓	✓	✓	✓

IEEE 802.3 /u	10 Mbps Ethernet & 100 Mbps Fast Ethernet	IEEE 802.1p	Priority queuing – QoS, CoS, ToS/DS
IEEE 802.3x	Full-Duplex with Flow Control	IEEE 802.1D/w	Rapid Spanning Tree for redundant rings
IEEE 802.3z	1000 Mbps Gigabit Ethernet	IEEE 802.1Q	VLAN for traffic segregation

Regulatory Approvals

EMI emissions	EN55022, FCC part 15, ICES-003
EMC immunity	IEC61326-1, IEEE C37.90
Shocks	IEC60068-2-27
Vibrations	IEC60068-2-6
Free Fall	IEC60068-2-32
Hazardous Location	UL1604, CSA C22.2/213 *(Class 1, Div. 2)*, EN50021/Zone 2
	EN 60079-15 (Zone 2 locations - EEx nA II T4 x)

Ethernet features

RJ45 ports	5 or 9 Shielded RJ45 ports 10/100 or 1000 BaseT(x)
Fiber optic ports	LC or SC or ST connectors
	Datarate 100BaseFX *(100Mbps) or 1000 Mbps for 9RG & 9MG models*
	Wavelength 1300 nm center
	Fiber multimode (mm) optimal: 62.5/125 um
	Fiber singlemode (sm) optimal: 9/125 um
	Fiber max distance *(Full duplex)*: 2km *(mm)*, 15 or 40 km *(sm) (except gigabit)*
	0,5km (mm), 10km (sm) for 9RG & 9MG models
Ethernet switch type	Intelligent store & forward
Full / Half Duplex	Configurable
RJ45 speed	10, 100 or 1000 Mbps auto-negotiation
RJ45 MDI/MDIX	Auto-crossover connection
RJ45 TD and RD polarity	Auto-polarity
Typical latency	16 us + frame time @ 10 Mbps *(varies on load and settings)*
	5 us + frame time @ 100 Mbps
MAC addresses supported	8192 (MG & RG); 2048 for all other models
Memory bandwidth	32 Gbps (MG & RG); 3.2 Gbps for all other models

Environmental

Operating Temperature	- 40°C to +85°C *(5 ports model + RJS 9ES)*
	- 40°C to +70°C *(All other models)*
Storage Temperature	- 40°C to +85°C
Humidity (non-condensing)	5 to 95 % RH

EXCEEDS MIL-STD-1275

Power protection rating	Industrial	MIL-STD-1275 Available on: RJS-5RS / RJS-9RS RJS-9MS -4 & -5
Surge protection		100 V for 1s
Transient protection	15 KW peaks	15 KW peaks
Spike protection	5 KW *(10 times for 10 µs)*	5 KW *(10 times for 10 µs)* 250 V *(50 times for 100 µs)*

Status *Ring & Managed models only*

"OK" contact output	10 – 30V DC
(or 10 - 50V DC depends on models)	
	Maximum current 0.5 A

Power Supply

Input Power *(depends on models)*	2 W to 9W typical, all ports active at 100 Mbps
Redundant Inputs	10 - 50V DC *(models RJS-5RS ; RJS-9RS)*
	10 - 30V DC *(all other models)*

Part Number Code

Series	**RJS**	**5ES**	**1**	**-**	**-**
RJ-Switch					
Type of Electronics					
5ES: 5 ports total, Ethernet unmanaged switch					
9ES: 9 ports total, Ethernet unmanaged switch					
5RS: 5 ports total, Ethernet Ring switch					
9RS: 9 ports total, Ethernet Ring switch					
5MS: 5 ports total, Ethernet Managed switch					
9MS: 9 ports total, Ethernet Managed switch					
RJ45 or fiber ports					
1: RJ45 ports only, no fiber					
2: 1 multimode fiber ports					
3: 1 singlemode fiber ports					
4: 2 multimode fiber ports (except for 9ES- models)					
5: 2 singlemode fiber ports (except for 9ES- models)					
Style of Fiber connectors					
Blank: No fiber					
SC: SC style fiber connector(s)					
ST: ST style fiber connector(s)					
SCL: SC style fiber connector(s), long haul fiber (40km), on singlemode models					
STL: ST style fiber connector(s), long haul fiber (40km), on singlemode models					
Pre-set for Ring models only					
E0: Pre-set for 0 rings (special order)					
E1: Pre-set for 1 ring (standard order), configured on last 2 ports					
E2: Pre-set for 2 rings (special order), Ring 1 = last 2 ports, Ring 2 = ports 1 & 2.					

Example: RJ-Switch, 5 ports Ethernet Ring switch, with 1 multimode ST fiber port, pre-set for 1 ring: **RJS-5RS-2-ST-E1**

Series	**RJS**	**9RG**	**CC**
RJ-Switch			
Type of Electronics			
9RG: 9 ports, Unmanaged RING Ethernet Switch including 3 gigabit ports			
9MG: 9 ports, Managed Ethernet Switch including 3 gigabit ports			
RJ45 or fiber (FO) ports			
CC: 6 ports RJ45 100 Mbps + 3 gigabit RJ45 ports			
MM: 6 ports RJ45 100 Mbps + 1 port gigabit RJ45 + 2 ports FO multimode gigabit (LC connectors)			
SS: 6 ports RJ45 100 Mbps + 1 port gigabit RJ45 + 2 ports FO multimode gigabit (LC connectors)			

Note: 9RG models have ports 8&9 (FO or gigabit RJ45) pre-set for a ring.

ATEX ZONE 2 RUGGED & IP68 SEALED ETHERNET SWITCH

This Ethernet Switch is a combination of rugged packaging with locking device for Zone 2 hazardous location, with fault-tolerant network redundancy.

Outstanding features :

- IP65/68 Sealing
- ATEX Zone 2II3G ExnAII T4X *(EN60079-15 & EN60079-0)*
- Plug and Play simplicity
- Ring redundancy
- Operating temperature: -40°F to 170°F *(-40°C to +75°C)*

Industrial Applications

- Oil & Gas
- Process Control
- Factory Automation

P/N: RJSPC-EX-5ES1-PLG-CAPS

Note: this part number includes:

- One ATEX Zone 2 IP68 Plug and Play Ethernet switch equipped with caps on Ethernet connectors
- One power plug equipped with anti decoupling nut
- Five Ethernet plugs equipped with anti decoupling spring

P/N: RJSPC-EX-5RS1-PLG-CAPS

Note: this part number includes:

- One ATEX Zone 2 IP68 RING Ethernet switch equipped with caps on Ethernet connectors
- One power plug equipped with anti decoupling nut
- Five Ethernet plugs equipped with anti decoupling spring

Key Features

- Ring Switch Networking Features **(managed features available!)**
  - Real-Time Ring for ultra-fast fault-tolerant loops
    - Recovery time of 30 ms + 5 ms per hop!
  - Modbus monitoring over Ethernet
    - Ideal for deterministic systems and PLCs
  - Real-time traffic prioritization (QoS and CoS)
    - Assure delivery of real-time data
    - Improve network utilization
    - User settable priority assignments
  - Advanced switch features
    - User configurable port settings
    - Port mirroring for traffic diagnostics
    - Pre-configurable for Plug-And-Play simplicity

Description (example for Ring model)

- Waterproof IP68 Rating (NEMA 6)
- Reduced Installation Costs with the patented RJStop® system
- Use any standard RJ45 cordset
- Rugged Enclosure in Polyester reinforced with 30% glass fiber
- Redundant power inputs with surge/spike protection
- Ultra reliable 1,000,000 hours Mean Time Between Failure *(MTBF)*
- Zone 2 hazardous location (models RJSPC-EX)

1. LEDs indicating activity, link status, datarate (10/100 Mbps)
2. LED indicating ring status
3. 5 rugged IP68 RJ Field Ethernet ports
4. Real-time ring feature
5. IP68 polyester enclosure reinforced with glass fiber
6. OK power & ring status
7. LEDs indicating power
8. Anti-decoupling nut for power plug
9. Anti-decoupling spring for ethernet plugs

RJ SWITCH

Harsh Environment Industrial Ethernet Switch Plastic Enclosure - IP68

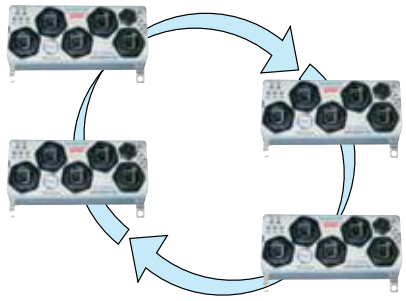

Rugged & Waterproof Switch

Amphenol offers a small size 5 port waterproof Ethernet Switch that can withstand a variety of extreme conditions - low & high temperatures, shocks & vibrations, dust particles or even liquid immersion. This is an easy way to make the Ethernet networks of your manufacturing site, automation or control units deterministic.

Amphenol IP68 Industrial Ring Switch

Amphenol IP68 Ring Ethernet switch is a combination of very fast, fault-tolerant network redundancy Sixnet technology and IP68 sealed & rugged packaging, specifically designed for the harshest environments.
Rings self-configure and just run, without any complex configuration.
The switch board is sealed within a waterproof IP68 polyester enclosure suitable for highly corrosive environments. The polyester material is glass fiber reinforced. This makes it very rugged against shocks and vibration.
The I/O interfaces are waterproof & rugged RJ45 connectors from the RJ FIELD plastic circular series.

Industrial Applications

- Factory Automation
- Robotics
- Process Control
- Transportation Systems
- Data Acquisition & Transmission

Key Features

- Ring Switch Networking Features (managed features available!)
  - Real-Time Ring for ultra-fast fault-tolerant loops
    - Recovery time of 30 ms + 5 ms per hop!
  - Modbus monitoring over Ethernet
    - Ideal for deterministic systems and PLCs
  - Real-time traffic prioritization (QoS and CoS)
    - Assure delivery of real-time data
    - Improve network utilization
    - User settable priority assignments
  - Advanced switch features
    - User configurable port settings
    - Port mirroring for traffic diagnostics
    - Pre-configurable for Plug-And-Play simplicity

1. LEDs indicating activity, link status, datarate (10/100 Mbps)
2. LED indicating ring status
3. 5 rugged IP68 RJ Field Ethernet ports
4. Real-time ring feature
5. IP68 polyester enclosure reinforced with glass fiber
6. OK power & ring status
7. LEDs indicating power
8. Redundant power inputs
9. OK contact output

IP68 Unmanaged and Ring Switch Features

IEEE Ethernet Standards

IEEE 802.3	10Mbps Ethernet
IEEE 802.3u	100Mbps Fast Ethernet
IEEE 802.3x	Full-Duplex with Flow Control
IEEE 802.1p standard	QoS/CoS - Quality/Class of Service for Ring model only

Regulatory Approvals

EMI emissions	EN55022, FCC part 15, ICES-003
EMC immunity:	IEC61326-1, IEEE C37.90
Shocks:	IEC60068-2-27
Vibrations:	IEC60068-2-6
Free Fall:	IEC60068-2-32

Ethernet features

Ports	5 Shielded RJ45 ports 10/100BaseTX
Ethernet switch type	Intelligent store & forward
Full / Half Duplex	Configurable
RJ45 speed	10 or 100 Mbps auto-negotiation
RJ45 MDI/MDIX	Auto-crossover connection
RJ45 TD and RD polarity	Auto-polarity
Typical latency	16 us + frame time @ 10 Mbps (varies on load and settings) 5 us + frame time @ 100 Mbps
MAC addresses supported	2048
Memory bandwidth	3.2 Gbps
Ethernet isolation	1500 Vrms 1 minute
Ring features (for Ring model only)	Link loss recovery time: 30 ms plus 5 ms per hop Maximum switches in ring: 50+ Dual Ring support

Power Supply

Input power (typical)	ES: 2,4 W ; RS: 2,7 W
Redundant inputs	10-30 VDC; 10-50 VDC for EP models

Status Reporting (for Ring model only)

"OK" contact output	Output current: 0.5 A max
"OK" contact State	OFF when a fail occurs ON when power and switching is OK

Environmental

Operating Temperature	- 40°C to +75°C
Storage Temperature	- 40°C to +85°C

Weight

0.54 kg

Real-Time Ring Switches

Amphenol Real-Time Ring switches combines the Plug&Play simplicity of an unmanaged switch with high performances of Sixnet Ring managed switches.

- **Real-Time fault-tolerant Ring**
  Recovery time of 30 ms + 5 ms per hop!
- **Real-Time traffic prioritization (QoS & CoS)**
  Assure delivery of real-time data
- **Available Managed features**
  User configurable port settings
  Port mirroring for traffic diagnostics
  Pre-configurable for Plug & Play simplicity

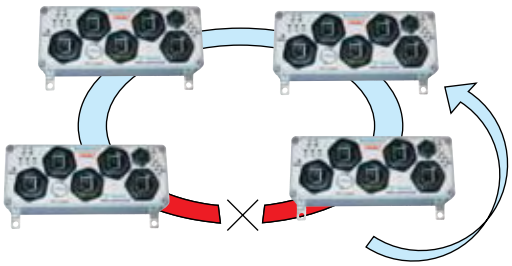

The use of such switches provides a fast network and avoids faults. When a break occurs, the switch instantly transfers data to new path. The link loss recovery is 30 ms plus 5 ms times the number of Ring switches in the ring. For example, 10 ring switches will recover in less than 80 ms. Rings can be pre-configured to "just run". They don't need an assigned IP address. But if you like, you can fine tune the performance of the ring by using a simple Windows wizard (which is free).
Ring networks can be divided into multiple "sub-rings" which enhance reliability and recovery speed through small ring paths.

The prioritization of messages assures delivery of real-time data. Some applications need to force no-real-time data (such as video information) to lower priority and force critical real-time data at higher priority. Network utilization is improved.

This combination of Ethernet technology associated with rugged and sealed protective enclosure is the ideal solution to deliver deterministic performance to your industrial systems even in the harshest environment!

Dimensions *(mm/inch)*

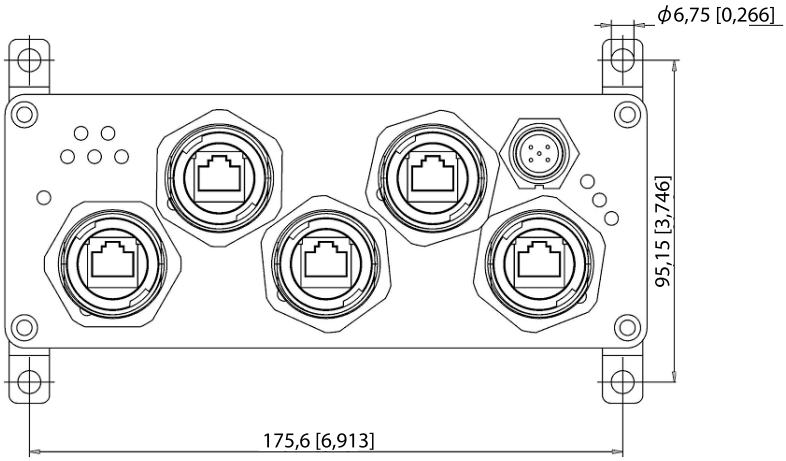

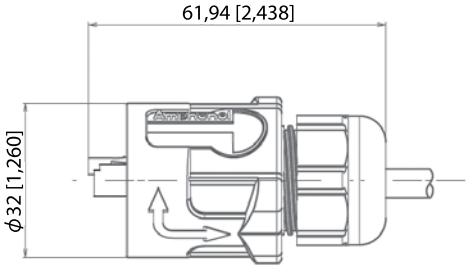

Accessory: Plugs for RJ45 ports

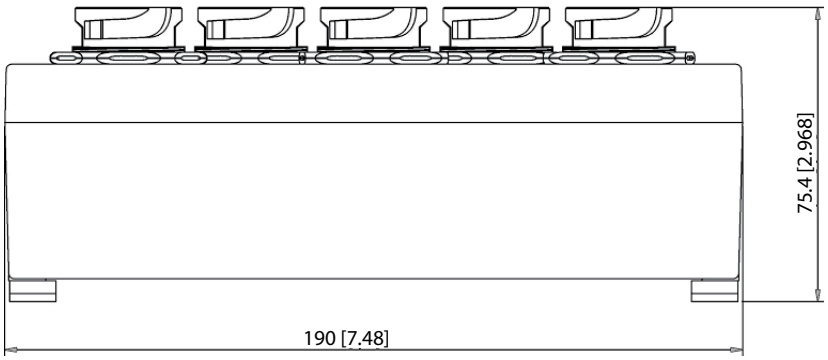

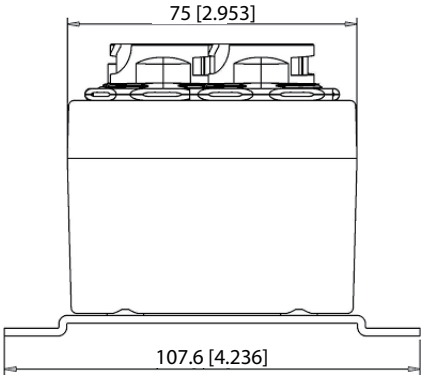

Part Numbers

Series IP68 RJ-Switch, with polyester body	RJS-PC	5ES	1
Type of Electronics 5RS: 5 ports 10/100 Mbps, Ring switch (standard order) 5ES: 5 ports 10/100 Mbps, Unmanaged switch (special order)			
Connectors 1: RJ45 ports, 10/100BaseT(X) 1CAPS: Caps are attached on both power and data receptacles			
Military Rated Protection Blank: Industrial protection (standard order) EP: Extended power protection exceeds MIL-STD-1275 (special order)			

Example IP68 Ethernet Ring switch, 5 ports 10/ 100 Mbps, with caps attached on the receptacles: RJS-PC-5RS-1CAPS

Note The Ring model is pre-set for 1 ring enabled on the ports 4 and 5.
You may change the configuration by using the free windows configuration tool.
Simply choose the desired pair of ports for your new enabled ring.

Accessories

- P/N: RJF PC5 PWR
  Plug for power port
  Sealing protection: IP68

- P/N: RJF RB 6
  Plugs for RJ45 ports
  Sealing protection: IP68

FREE WINDOWS CONFIGURATION TOOL
Download it at www.rjswitch.com

RJ SWITCH

Harsh Environment Gigabit IP68 sealed & rugged military ethernet switch

Sealed, Rugged & Waterproof Switch

Amphenol offers 9 ports managed, RING and unmanaged Ethernet Switches that can withstand a variety of extreme conditions. Whatever the situation - high temperatures, extreme shocks & vibrations, dust particles or even liquid immersion there is a solution available.

This is an easy way to make the Ethernet networks of your systems deterministic. **Up to 3 gigabit ports** are offered! The switch electronics are sealed within a waterproof IP68 metallic enclosure. The conductive cadmium plating is suitable for most demanding EMI-RFI environments. The I/O interface includes redundant power inputs as well as waterproof rugged RJ45 connectors from the RJF TV FIELD threaded product series based on MIL-DTL-38999 (Series III) metallic shell size 19. This serie enables the transformation without tooling of any standard RJ45 cordset into a robust and waterproof connection system.

Applications

Military Applications

- Data Acquisition & Transmission
- Battlefield Communication C4ISR
- Rugged Networks
- Mobile Communications
- Submarine
- Avionic & Shipboard Systems

1. IP68 Aluminium enclosure with cadmium conductive plating or black paint (RoHs)
2. Non-managed, Ring or Managed Capability
3. LEDs for Power
4. LEDs indicating activity, link status, datarate (10/100Mbps or Gigabit)
5. Redundant power inputs & OK output
6. Balance pressure vent
7. Fixture for vertical mounting
8. 9 rugged IP68 RJF TV Ethernet ports with cadmium or nickel plating

Optional Caps Available for Unused Ports

Key Features

Rugged environmental features

- Rugged metal packaging with cadmium or paint protection
- **MIL-DTL-38999 III** connectors for both power and Ethernet ports
- **IP65/IP68** rated
- **MIL-STD-461E (CE03) • MIL-STD 704A • RTCA/DO-160B** 600 V spike suppression (optional)
- **MIL-STD-1275** Surge and Spike protection (*)
- **MIL-STD-810F** shocks
- **RTCA/DO-160C** Vibrations
- Wide operating temperature range of **–40°C to 70°C**
- **MIL-STD-810F** Altitude 50,000 ft - 15,000 m

Ethernet features

- **3 ports 10/100/1000-BaseT(X)** + 6 ports 10/100-BaseT(X) (*)
- Unmanaged, RING unmanaged and **Managed** models
- Full-Duplex operation with flow control (no collisions!)
- Auto-detecting, auto-crossover and auto-polarity

Features for ring and managed models.

RING switch

- Ring for fast fault-tolerant loops
- Recovery time of 30 ms + 5 ms per hop!
- QoS and CoS priority queuing

MANAGED switch

- RSTP for redundant rings
- QoS and CoS priority queuing
- SNMPv3 authentication and encryption
- IGMP for multicast filtering
- VLAN for trafic segregation
- And much more!

(*): depend on models

Managed & Unmanaged Switch Features

IEEE Ethernet Standards

Models	Features	802.3/u	802.3x	802.3z	802.1p	802.1D	802.1w	802.1Q
RJS ML 9ES	Unmanaged	✓	✓					
RJS ML 9RS	RING	✓	✓		✓			
RJS ML 9RG	RING - Gigabit	✓	✓	✓	✓			
RJS ML 9MS	Managed	✓	✓		✓	✓	✓	✓
RJS ML 9MG	Managed - Gigabit	✓	✓	✓	✓	✓	✓	✓

IEEE 802.3 /u	10 Mbps Ethernet & 100 Mbps Fast Ethernet	IEEE 802.1p	Priority queuing – QoS, CoS, ToS/DS
IEEE 802.3x	Full-Duplex with Flow Control	IEEE 802.1D/w	Rapid Spanning Tree for redundant rings
IEEE 802.3z	Gigabit 1000 Mbps Ethernet	IEEE 802.1Q	VLAN for traffic segregation

Environmental specifications

EMI emissions	EN55022 class A, FCC part 15, ICES-003
EMC immunity	IEC61326-1, IEEE C37.90
Shocks	MIL-STD-810F: 40g, 11ms, 18 saw tooth shocks
Vibrations	RTCA/DO-160C Sinusoidal vibrations 5-55 Hz: 0.01 inch ; 55-500 Hz: 1.5 g
Altitude	MIL-STD-810F : 50,000 ft - 15,000 m
Temperature	Operating: - 40°C to +70°C
	Storage: - 40°C to +85°C
Weight	approx 2.2Kg

Power Supply

24V DC Input	10 - 30V DC for 9ES model (single power)
	10 - 50V DC redundant for 9RS models
	10 - 30V DC redundant for 9RG, 9MS and 9MG models
Input power	4 to 9 W typical (all ports active), depends on models
Connectors for power	MIL-DTL-38999 III Jam nut receptacle, olive drab cadmium or nickel plated
	9ES models: 1 connector TVx07xx 0998P: 3 cts # 20 (wire 0.6 mm^2 max)
	Other models: 2 connectors TVx07xx 0935P: 6 cts # 22D (wire 0.4 mm^2 max)
	The second connector facilitates the cabling for redundant power.
"OK" contact output	(Ring models only) Sourcing power; Maximum current: 0.5 A

Ethernet features

RJ45 ports	9 shielded RJ45 ports 10/100 Base T(X) or 1000 Base T(X)
Connectors for RJ45 ports	RJFTV 7 G: Jam nut receptacle based on MIL-DTL-38999 III
	Olive drab cadmium or nickel plated
RJ45 speed	10, 100 or 1000 Mbps auto-negotiation
Typical latency	16 us + frame time @ 10 Mbps (varies on load and settings)
	5 us + frame time @ 100 Mbps
Full / Half Duplex	Automatic or configurable
MDI / MDIX	Auto-crossover
MAC addresses supported	8192 (MG & RG); 2048 for all other models
Memory bandwidth	32 Gbps (gigabit); 3.2 Gbps for all other models

Power protection	Models ES; MS; RG & MG	Model RJS-ML-9RS1 MIL-STD-1275	Optional -704 Specifications Available for all models
Surge		100 V for 1s	100 V, 60 ms MIL-STD-1275A Fig. 8&9 of MIL-STD-704A
Transient	15 KW peaks	15 KW peaks	
Spike	5 KW (10x for 10 µs)	5 KW (10x for 10 µs) 250 V (50x for 100 µs)	400 V, 5 µs (DO160) 600 V, 10 µs (MIL-STD-461C CS06 limits) Protection against reverse voltages

Real-Time Ring Switches

Amphenol Real-Time Ring switches combines the Plug&Play **simplicity** of an unmanaged switch with **high performances** of managed switches.

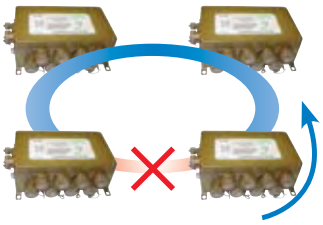

Real-Time fault-tolerant Ring
Recovery time of 30 ms + 5 ms per hop!
Real-Time traffic prioritization (QoS & CoS)
Assure delivery of real-time data
Available Managed features
User configurable port settings
Port mirroring for traffic diagnostics
Pre-configurable for Plug & Play simplicity

The use of such switches provides a fast network and avoids faults. When a break occurs, the switch instantly transfers data to new path. The link loss recovery is 30 ms plus 5 ms times the number of Ring switches in the ring. For example, 10 ring switches will recover in less than 80 ms. Rings can be pre-configured to "just run". They don't need an assigned IP address. But if you like, you can fine tune the performance of the ring by using a simple Windows wizard (which is free).
Ring networks can be divided into multiple "sub-rings" which enhance reliability and recovery speed through the small ring paths.

Dimensions (mm/inch) *Military Aluminum ML Enclosure*

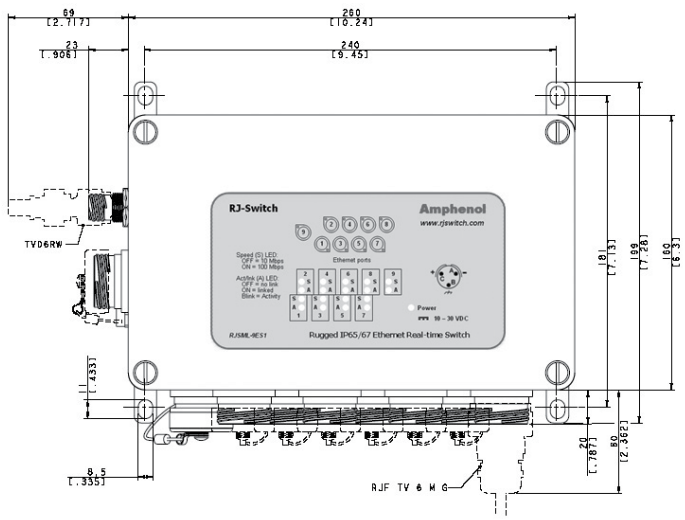

Pin-out for power

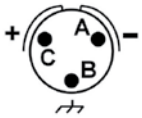

Pin-out for the 9ES1 models

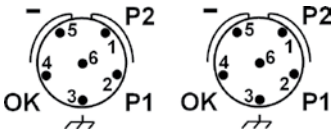

Pin-out for the 2 power connectors of the Ring and managed models
Note: The use of 2 connectors facilitates the cabling of redundant power inputs.

Part Numbers

Series RJ-Switch	RJS	ML	9ES1	-	-
Type of Enclosure					
ML	MIL-DTL-38999 (Series III) Receptacles, OD Cadmium Plating				
BKN	RAL 9005 (Jet black) Paint on Aluminum box, Nickel plated 38999 (Series III) Receptacles, Additional coating on PCB, RoHs compliant				
Type of Electronics					
9ES1	Unmanaged 9 ports 10/100 Base T(X)				
9RS1	Unmanaged RING 9 ports 10/100 Base T(X)				
9RG1	Unmanaged RING 6 ports 10/100 Base T(X) + 3 ports 10/100/1000 Base T(X)				
9MS1	Managed 9 ports 10/100 Base T(X)				
9MG1	Managed 6 ports 10/100 Base T(X) + 3 ports 10/100/1000 Base T(X)				
Optional	Transient suppression module; 600V spike suppressor				
Blank	No transient suppression module				
704	Switch equiped with additional transient suppression module				
Accessories	Caps for receptacles fixed with string directly to the receptacle				
Blank	No caps included. The Ethernet ports are still sealed but the contacts are not protected				
Caps	Attached caps for both power and data included				

EXAMPLES:
- **RJS ML 9MG1 CAPS:** Managed switch in an aluminum enclosure with olive drab green conductive cadmium plating, 6 ports 10/100 Base T(X) + 3 gigabit ports, RJF TV threaded coupling receptacles, caps are added to the switch
- **RJS BKN 9ES1 704 CAPS :** Unmanaged switch in a black paint enclosure, 9 ports 10/100 Base T(X), RJF TV threaded coupling receptacles, both power and Ethernet receptacles are Nickel plated, caps are added to the switch, additional transient suppression module included.

NOTES:
- All BKN Ethernet switches and nickel plated accessories are RoHs compliants.
- With the -704 option, a filter module is included inside the switch allowing to meet MIL-STD-461 and other aircraft standards.

ROHS COMPLIANT BKN

Accessories

■ Plugs for Ethernet ports

RJF TV 6 M G: Cadmium OD plating
RJF TV 6 M N: Nickel plating

Based on MIL-DTL-38999
No tool required!

■ Caps for Ethernet ports

RJSML C7G: Cadmium OD plating
RJSML C7N: Nickel plating

A simple screwdriver is needed!
Note: Do not order the caps in addition with pre-equipped RJS-xxxx- CAPS switches.

■ Plugs for I/O ports:

MIL-DTL-38999, cadmium plated, crimp contacts.

For 9ES1 model:
One plug (3 cts #20)
TV 06 RW 0998 S: Cadmium OD plating
TV S06 RF 0998 S: Nickel plating

For 9RS1, 9RG1, 9MS1 & 9MG1 models
Two plugs (6 cts # 22D)
TV 06 RW 0935 S: Cadmium OD plating
TV S06 RF 0935 S: Nickel plating

■ Backshells for I/O plugs

We suggest to use MIL-DTL-38999 III backshells.
Consult the dedicated catalog (E118) for details.

Examples:
TVNSA 09 014: shielding backshell, cadmium OD plating
TVNSA 09 023: shielding backshell, nickel plating
+ 804221 straight heat shrink for sealing

EXAMPLES:
with an **RJSML 9MG1 CAPS** switch, we suggest to use hereafter accessories:
RJF TV 6 M G (up to 9) for Ethernet ports
TV 06 RW 0935 S (x2) + **TVNSA 09 014** (x2) + **804221** (x2) for power ports

But Also: **We offer box assembly**

- Based on customer specification
- Using our IP68 box solutions
- Large range of waterproof connectors
  - For power supply > TV or PT series
  - For Ethernet network > RJField
  - For USB > USBField
  - For Fiber optic > TVOP, CTOS and others

Cabling box with RJF receptacles and self-closing caps

Kit with TVOP fiber connectors and RJFTV connectors

RJ FIELD GLOSSARY

10BASE-T
10 Mbps Ethernet on twisted-pair (Category 3) cable.

100BASE-T
The twisted pair version of 100 Mbps Ethernet. Requires Category 5 cabling.

1000BASE-T
A recent LAN standard for implementing 1000 Mbps Ethernet on Category 5 cable. Also called Gigabit Ethernet.

Auto-MDIX
A protocol which allows two Ethernet devices to negotiate their use of the Ethernet Transmit (Tx) and Receive (Rx) cable pairs. This allows two Ethernet devices with MDI or MDI-X connectors to connect without using a cross-over cable.

Baud
A unit of measurement that denotes the number of bits that can be transmitted per second. For example, if a modem is rated at 9600 baud it is capable of transmitting data at a rate of 9600 bits per second.

Bandwidth
The maximum capacity of a network channel. Usually expressed in bits per second (bps). Ethernet channels have bandwidths of 10, 100, and 1000 Mbps (Gigabit).

bps
Bits Per Second is the unit used for measuring line speed, the number of information units transmitted per second.

Broadcast
A transmission initiated by one station and sent to all stations on the network.

Byte
The amount of memory needed to store one character such as a letter or a number. Equal to 8 bits of digital information. The standard measurement unit of a file size.

Category 5
A performance classification for twisted pair cables, connectors and systems. Specified to 100 MHz. Suitable for voice and data applications up to 155 Mbps.

Category 5 e
Also called Enhanced Category 5. A performance classification for twisted pair cables, connectors and systems. Specified to 100 MHz. Suitable for voice and data applications up to 1000 Mbps.

Category 6
A performance classification for twisted pair cables, connectors and systems.Specified up to 250 MHz.

CSMA/CD
Carrier Sense Multiple Access/Collision Detect. The Medium Access Control (MAC) protocol used in Ethernet.

Data rate
The speed of the data transmission, measured in bps (bits per second) or Mbps.

Duplex (Full, Half)
Full duplex is a communications method that allows for the simultaneous transmission and reception of data. In Half Duplex communication, transmissions and receptions can occur in either direction but not at the same time.

Ethernet
The most common network protocol in use. A protocol is a set of rules enabling data communications. Ethernet can operate over several different media including fiber optic, coaxial cable and twisted-pair cable.

IEEE 802.3
IEEE Working Group for CSMA/CD, the protocol used in Ethernet transmissions.

IGMP snooping
The ability of a switch to observe Internet Group Multicast Protocol (IGMP) traffic in order to learn IP Multicast group membership. The purpose is to restrict multicast transmissions to only those ports which have requested them.

LAN
Local Area Network. A network of directly-connected machines (located in close proximity), providing high speed communication over physical media such as fiber optics, coaxial cable, or twisted pair wiring.

MAC Address
A unique address assigned to a station interface, identifying that station on the network. With Ethernet, this is the unique 48-bit station address. Same as the physical address.

Megabit (Mb)
Megabit. One million bits of information, usually used to express a data transfer rate ; 1 Megabit/ second = 1Mbps.

Megabyte (MB)
MegaByte. A unit of data storage size which represents one million characters of information.

Multicast
A transmission initiated by one station to many stations of the network.

Port Mirroring
Port mirroring allows a switch port to monitor packets from any or all of its ports so that traffic can be analysed.

Quality of Service (QoS)
Some switches support QoS (per 802.1p and 802.1Q standards) whereby messages can be assigned levels of priority. QoS is important where time-critical applications can be impaired by data delays.

RJ45
8-position modular jacks used on twisted pair links for Ethernet cabling.

RJ-Field
A wide range of connectors which allow to reinforce and seal standard RJ45 cable. See www.rjfield.com

SNMP
Simple Network Management Protocol. This is THE standard used for switch management programs.

Spanning Tree Protocol (STP)
A link management protocol providing path redundancy and preventing network loops by defining a tree to span all switches in a network. It forces redundant data paths into a standby (blocked) state. If a path malfunction occurs, the topology is reconfigured and the link reestablished by activating the standby path.

TCP/IP
Transmission Control Protocol/Internet Protocol. A set of protocols, resulting from ARPA efforts, used by the Internet to support services such as remote login (TELNET), file transfer (FTP) and mail (SMTP).

TELNET
The Internet standard protocol for remote login (terminal connection) service. TELNET allows a user at one site to interact with a remote timesharing system at another site as if the user's terminal were connected directly to the remote computer.

VLAN
Virtual Local Area Network. A LAN that maps stations on a basis other than location such as by department, user type or application. Managing traffic, workstations, and bandwidth can be easier with a VLAN and improve network efficiency.

NORTH AMERICA

Amphenol Pcd, Inc.
72 Cherry Hill Drive
Beverly, MA. 01915 - USA
Telephone: +1-978-624-3400
info@amphenolpcd.com

EUROPE

Amphenol AIR LB
10 Rue Champ Raymond
08110 Carignan - France
Telephone: +33-3-2422-3270
Fax: +33-3-2422-387

Amphenol AIR LB GmbH
Am Kleinbahnhof 4 - 66740 Saarlouis - Germany
Telephone: +49-6831-981-00
Fax: +49-6831-981-030

Amphenol BENELUX
Zadelmaker 121 NL - 2401 PD Alphen aan den Rijn
The Netherlands
Telephone: +31-172-444-903
Fax: +31-172-240-254

Amphenol IBERICA
Edificio "Burgosol"
c/Comunidad de Madrid, 35 bis Oficina No 55
ES - 28230 Las Rozas - Madrid - Spain
Telephone: +34-91-640-73-02/03/04
Fax: +34-91-640-73-07

Amphenol ITALIA
Via Barbaiana n.5, 20020 Lainate - Milano - Italy
Telephone: +39-02-93254-1
Fax: +39-02-93254-444

Amphenol LIMITED
Thanet Way, Whitstable - Kent, CT5 3JF
United Kingdom
Telephone: +44-1227-773-200
Fax: +44-1227-276-571

Amphenol MIDDLE & EASTERN EUROPE
Wiener gase 68 - 2380 Perchtoldsdorf - Austria
Telephone: +43-699-10396-071
Fax: +43-699-40396-071

SEFEE
ZI des Cazes - BP 243
12403 Saint Affrique - France
Telephone: +33-5-6598-1100
Fax: +33-5-6549-3712

Amphenol SCANDINAVIA
Ängsullsvägen 7 - S-187 51 Täby - Sweden
Telephone: +46-702-12-92-00
Fax: +46-702-63-46-77

Amphenol SOCAPEX
948 Promenade de l'Arve - BP29
74311 Thyez Cedex - France
Telephone: +33-4-5089-2800
Fax: +33-4-5096-1941

Amphenol SOUTH EASTERN EUROPE
948 Promenade de l'Arve - BP29
74311 Thyez Cedex - France
Telephone: +33-4-5089-2840
Fax: +33-4-5096-1941

ASIA

Amphenol DAESHIN
558 Sosa, SongNea
Bucheon-city, Kyunggi-Do
Korea 420-130
Telephone: +82-32-610-3800
Fax: +82-32-673-2507/665-6219

Amphenol INTERCONNECT INDIA PRIVATE LIMITED
105 Bhosari Industrial Area
Pune 411 026 - India
Telephone: +91-20-712-0363/0463/0155
Fax: +91-20-712-0581

Amphenol JAPAN
689-1, Iseochi
Ritto-shi Shiga 520-3044 - Japan
Telephone: +81-77-553-8501
Fax: +81-77-551-2200

Amphenol PCD CO.LTD
2/F Building A5,
Huafeng Technology Park
Guan Tian, Bei Huan Road,
Shi Yan Street
BaoAn District, Shenzhen,
China 518132
Tel: +86-755-8173-8281
Fax: +86-755-8173-8180
www.amphenolpcd.com.cn

OTHER AREAS

Amphenol ARGENTINA
Av. Callao 930 2do piso Oficina B "Plaza"
C1023 - AAP Buenos Aires - Argentina
Telephone: +54-11-4815-6886
Fax: +54-11-4814-5779

Amphenol AUSTRALIA PTY LIMITED
2 Fiveways Blvd, Keysborough
Melbourne, Victoria 3173 - Australia
Telephone: +61-3-8796-8888
Fax: +61-3-8796-8801

BAR TEC LTD
4 Hagavish St, PO Box 279
Kfar Saba 44102 - Israel
Telephone: +972-9-767-4097
Fax: +972-9-767-4324

Amphenol DO BRAZIL
Rua Diogo Moreira,132, 20 andar, rooms 2001-2-3
CEP: 05423-010 Sao Paulo SP - Brazil
Telephone: +55-11-3815-1003
Fax: +55-11-3815-1629

Amphenol MEXICO
Prolongacion Reforma 61 - 6 B2
Col. Paseo de las Lomas - C.P.013130 - Mexico
Telephone: +52-55-5258-9984
Fax: +52-55-5081-6890

Amphenol RUSSIA
8 bldg., 2 Yaroslavskaja Street,
129164 Moscow - Russia
Telephone: +7-495-937-6341
Fax: +7-495-937-6319

Amphenol SOUTH AFRICA
30 Impala Road
2196 Chislehurston-Sandton - South Africa
Telephone: +27-11-783-9517
Fax : +27-11-783-9519

Amphenol TURKEY
Ayazaga Mah. Meydan Sok
No:28 Beybi Giz Plaza Kat:26
34396 Maslak - Istanbul / Turkey
Telephone: +90-212-335-25-01
Fax: +90-212-335-25-00

Amphenol

The information given in this document are **as a guideline only.**
We reserve the right to **modify our products** in any way we deem necessary.
Any duplication is **prohibited**, unless approved in writing.
Design by **Steven Kilgallon** • January 2009
Gestion & Edition by **COMALYON**

Your local Contact:

DOC-000075-ANG

For more information, please visit our websites:
www.rjfield.com - www.usbfield.com - www.fwfield.com - www.rjswitch.com

Mouser Electronics

Authorized Distributor

Click to View Pricing, Inventory, Delivery & Lifecycle Information:

Amphenol:

USBFTVC7MRG USBF21B USBFKEY0256G USBFKEY1024G USBFTV7PE2G USBBF6100 USBBF6200 USBFTV7PE2N USBBF7 USBBFC7 USBF21NSCC USBFTVC2N USBFTVC6N USBFTVC7N USBF21BSCC USBFTVC7G USBFTVC6G USBFTVC2G USBFTV6G USBFTV72N USBFTV72G USBFODE USBFTV71N USBFTV7PE1N USBFTV71G USBFTV7PE1G USBFTV21G USBFTV2PE1N USBFTV2PE1G USBFTV21N USBFKEY0256B USBFKEY0256N USBFKEY0512B USBFKEY0512G USBFKEY0512N USBFKEY1024B USBFKEY1024N USBFKEY2048B USBFKEY2048G USBFKEY2048N USBFKEY4096B USBFKEY4096G USBFKEY4096N USBFKEY8192B USBFKEY8192G USBFKEY8192N USBF22BSCC USBF22GSCC USBBFTV21G USBBFTV21N USBBFTV22G USBBFTV22N USBBFTV2PE1G USBBFTV2PE1N USBBFTV2PE2G USBBFTV2PE2N USBBFTV6G USBBFTV6N USBBFTV71G USBBFTV71N USBBFTV72G USBBFTV72N USBBFTV7PE1G USBBFTV7PE1N USBBFTV7PE2G USBBFTV7PE2N USBBF21BSCC USBBF21NSCC USBF22NSCC USBFTVC7MG USBBFTV2S2N10OPEN USBBFTV7S2G10OPEN USBFTV2PEM2N USBBFTV7S2N10OPEN USBFTV72N03A USBBFTV7S2N10A USBBFTV2S2N10A USBBFTV2S2N05A USBBFTV2S2G10A USBBFTV2S2G05OPEN USBBFTV7S2G05A USBBFTV2S2G03A USBBFTV7S2N03OPEN USBBFTV7S2G03OPEN USBBFTV7S2N03A USBBFTV7S2G03A USBBFTV2S2G03OPEN USBFTV25GF459 USBBFTV7S2G10A USBFTVKEY6A4096G USBBFTV2S2G05A USBBFTV7S2G05OPEN USBBFTV2S2N03A USBBFTV7S2N05A USBBFTV2S2G10OPEN USBBFTV7S2N05OPEN USBBFTV2S2N03OPEN USBBFTV2S2N05OPEN USBFTVKEY6A0512G USBFTVKEY6A1024GCAP