Rugged Digital Networks Solutions

Reinforced Infocom Connectors for Harsh Environment

RJ Field - USB Field

Amphenol

January 2014 update

Connecting to people + technology

www.rjfield.com

TABLE OF CONTENTS

Rugged Ethernet Solutions

Field installable

RJFRB: Plastic circular shell - Reverse bayonet coupling 10
RJF544: Plastic circular shell - Push pull coupling 13
RJFEZ: Plastic rectangular shell - Lever coupling 15
RJF: Metallic circular shell based on MIL-DTL-26482 H - Bayonet coupling 17
RJF special receptacles: cable mount inline and PCB tails receptacles 20
NEW RJF receptacles and plug with 360° EMI backshells 21
RJF Environmentaly sealed receptacles, transversally sealed receptacles 22
RJF Hermetic receptacles 23
NEW RJF for big insulation wire up to 1.6 mm [0.062 inch] 24
RJ Field receptacle with Self Closing Cap 25
RJFTV: metallic circular shell based on MIL-DTL-38999 series III - Thread coupling with anti-decoupling device 26
RJFTV with Self Closing Cap (SCC) 29
RJFTV: Receptacles and plugs with 360° EMI backshells 30
RJFTV: Through bulkhead receptacles 32
RJFTV: Stand off receptacles 33
NEW RJF-RJFTV: Environmentaly & transversally sealed receptacles 36
NEW RJF/RJFTV: Hermetic receptacles 37
NEW RJFTV for big insulation wire up to 1.6 mm 38
RJ45/M12 adaptor 39
Special RJ45 adaptor for Military & Commercial Aeronautics 40
High Reliability Cat5E Ethernet cable and cordsets 41
NEW High Reliability Cat6 Ethernet cable and cordsets 42
NEW High Reliability Cat6A Ethernet cable and cordsets 43

NEW Cable assemblies

RJ45/M12 Railway cable solution 46
Jumper Railway intercoach 47

Rugged Electronics

Military Ethernet Media Converter for harsh environment, fully MIL-STD compliant

NEW RES-GMC with Expanded Beam technology: Unmanaged Military Ethernet Media Converter - 2 Gigabit ports 50
RES-GMC with Butt Joint Fiber connector: Unmanaged Military Ethernet Media Converter - 2 or 4 Gigabit ports 52
RES-GMC-1M-FORC: Military Ethernet Media Converter with Remote Control 54

Military Ethernet Switch for harsh environment, fully MIL-STD compliant

NEW RES-SCE-AC-8US: Unmanaged Miniature Portable Ethernet Switch - 8 Fast ports 56
RES-SCE-8MG: Managed Miniature Portable Ethernet Switch - 8 Gigabit ports 58
RESMLAC-8US-CAPS: Unmanaged Military Ethernet Switch, MIL-DTL-38999 connectors - 8 Fast ports 60
RJSMLAC-8UG-CAPS: Unmanaged Military Ethernet Switch, MIL-DTL-38999 connectors - 8 Gigabit ports 62
RJSMLAC-8MG-CAPS: Managed Military Ethernet Switch, RJFTV connectors - 8 Gigabit ports 64
RESMLAC-8MG-CAPS: Managed Military Ethernet Switch, MIL-DTL-38999 connectors - 8 Gigabit ports 66
RESMLAC-8MG-CAPS F35: Managed Military Ethernet Switch, MIL-DTL-38999 connectors - 8 Gigabit ports 68
RESMLAC-28MG: Managed Military Ethernet Switch - 24 Gigabit + 4 combo 10G ports 70

Military Ethernet Switch for harsh environment with industrial EMI compliancy

RJSML-8US1 and RJSML-8UG1: Unmanaged Military Ethernet Switch, Fast or Gigabit 73
RJSML-MG7F3G : Managed Military Ethernet Switch - 7 Fast ports + 3 Gigabit ports 77

Industrial Ethernet Switch for harsh environment

RJSPC: Unmanaged or Ring Industrial Ethernet Switch - 5 Fast ports 81

Rugged USB solutions (USB3.0 & USB2.0)

Field installable

USB3.0

NEW USB3FTV (USB-A) 86
NEW USB3F TV - Transversally sealed receptacles 90
NEW USB3F TV - Hermetic receptacles 93
NEW USB3 receptacle with Self Closing Cap 94
NEW Metallic Self Closing Cap (SCC) for USB3F TV square flange receptacles 95
NEW High reliability USB 3.0 cordsets 96

USB2.0

USBFTV (USB-A) 97
NEW USBF TV - Transversally sealed receptacles 100
USBF TV Hermetic receptacles 102
USBFTV - Receptacles with 360° EMI backshells 103
NEW USBF TV Through bulkhead 104
NEW USBF TV Stand off receptacles 105
USB 2.0 receptacle with Self Closing Cap (SCC) 107
Metallic Self Closing Cap (SCC) for USBF TV square flange receptacles 108
High reliability USB 2.0 cordsets 109
USBF SC - Quick release series 110
USBBF TV (USB-B) 112
USBBF TV Stand off receptacles 115
USBBF TV - Transversally sealed receptacles 117
NEW USBB receptacle with Self Closing Cap 118
Metallic Self Closing Cap (SCC) for USBB square flange receptacles 119
NEW Special USB adaptor for Military & Commercial Aeronautics 120

Cable assemblies

USB-A plastic & neoprene solutions with Self Closing Cap (SCC) 122
USB-B Field plastic - Overmolded cordset plug 125

Rugged Electronics

NEW Reinforced USBFTV memory keys 128
Reinforced USB memory keys 129
NEW Reinforced USB amplifier 130

ATEX Solutions

RJFTVX, USBFTVX, RJ11FTVX - RJ45, USB, RJ11/12 explosion proof solutions for Zone 2 132
RJSPCEX Atex Zone 2 Rugged & IP68 138

Other Rugged solutions

Field installable

FWFTV: metallic circular shell based on MIL-DTL-38999 series III - thread coupling with anti-decoupling device 140
IEEE1394 receptacle with Self Closing Cap 143
RJ11F: metallic circular shell based on MIL-DTL-26482 H - bayonet coupling 144
Special RJ11 adaptor for Military & Commercial Aeronautics 146
MTRJF TV: metallic circular shell based on MIL-DTL-38999 series III - thread coupling with anti-decoupling device 148
LC Field: metallic circular shell based on MIL-DTL-38999 series III - thread coupling with anti-decoupling device 150

Glossary 152

RUGGED ETHERNET SOLUTION SELECTION GUIDE

FIELD INSTALLABLE

Connectors	Series	Indust. Ethernet Spec.	Coupling Mechanism	Shape	Material	Specification	Prime Market	Page
	RJF RB		Reverse Bayonet	Circular	Plastic	N/A	Industrial & Telecom	10
	RJF544	IEC 60603-7 variant 12	Push Pull	Circular	Plastic	N/A	Industrial & Telecom	13
	RJF EZ	IEC 60603-7 variant 13	Lever	Rectangular	Plastic	N/A	Industrial & Telecom	15
	RJF	IEC 60603-7 variant 11	Bayonet	Circular	Metal	MIL-DTL-26482	Industrial Mil/Aero	17
	RJF Special	IEC 60603-7 variant 11	Bayonet	Circular	Metal	MIL-DTL-26482	Industrial Mil/Aero	20
NEW	RJF Receptacles - Plugs with 360° EMI backshells		Bayonet	Circular	Metal	MIL-DTL-26482	Industrial Mil/Aero	21
	RJF Environmentaly Sealed Transversally Sealed		Bayonet	Circular	Metal	MIL-DTL-26482	Mil/Aero & Industrial	22
	RJF Hermetic Receptacles		Bayonet	Circular	Metal	MIL-DTL-26482	Mil/Aero & Industria	23
NEW	RJF For big insulation wire up to 1.6mm [0.062 inch]		Bayonet	Circular	Metal	MIL-DTL-26482	Industrial Mil/Aero	24
	RJFTV		Thread	Circular	Metal	MIL-DTL-38999 Series III	Mil/Aero & Rail Mass Transit	26
	RJF TV Receptacles - Plugs with 360° EMI backshells		Thread	Circular	Metal	MIL-DTL-38999 Series III	Mil/Aero & Rail Mass Transit	30
	RJF TV Special Through bulkhead		Thread	Circular	Metal	MIL-DTL-38999 Series III	Mil/Aero & Rail Mass Transit	32
	RJF TV Special PCB Stand-Off		Thread	Circular	Metal	MIL-DTL-38999 Series III	Mil/Aero & Rail Mass Transit	33
	RJFTV Environmentaly Sealed, Transversally Sealed		Bayonet or Thread	Circular	Metal	MIL-DTL-38999 Series III	Mil/Aero & Industrial	36
	RJFTV Hermetic Receptacles		Bayonet or Thread	Circular	Metal	MIL-DTL-38999 Series III	Mil/Aero & Industrial	37
NEW	RJF TV For big insulation wire up to 1.6 mm		Bayonet or Thread	Circular	Metal	MIL-DTL-38999 Series III	Mil/Aero	38
NEW	RJ45/M12 Adaptors			Circular	Metal		Industrial & Rail Mass Transit	39
NEW	Special RJ45 adaptor for Military & Commercial Aeronautics			Circular	Metal		Industrial & Rail Mass Transit	40

FIELD INSTALLABLE

Cables	Series	Indust. Ethernet Spec.	Coupling Mechanism	Shape	Material	Specification	Prime Market	Page
	High reliability **Cat 5E** cable and cordsets						Mil/Aero & Industrial	41
NEW	High reliability **Cat 6** cable and cordsets						Mil/Aero & Industrial	42
NEW	High reliability **Cat 6A** cable and cordsets						Mil/Aero & Industrial	43

CABLE ASSEMBLIES

Connectors	Series	Indust. Ethernet Spec.	Coupling Mechanism	Shape	Material	Specification	Prime Market	Page
NEW	RJ45/M12 Railway Cable Solution		Bayonet	Circular	Metal	MIL-DTL-26482	Industrial & Rail Mass Transit	46
NEW	Jumper		Thread	Circular	Metal	MIL-DTL-38999 Series III	Rail Mass Transit	47

RUGGED ELECTRONICS

Connectors	Series	Sealing	Type	# of ports	Specification	Prime Market	Page
NEW	RES-GMC Media converter with Expanded Beam Tech.	IP67/68	Unmanaged	2 Gb ports		Mil/Aero	50
NEW	RES-GMC Media converter with Butt Joint Fiber connect.	IP67/68	Unmanaged	2 or 4 Gb ports		Mil/Aero	52
NEW	RES-GMC-1M-FORC Media converter with Remote Control	IP67/68	Unmanaged	1 Gb port + 1 Fiber port		Mil/Aero	54
NEW	RES-SCE-AC-8US miniature portable switch	IP67/68	Unmanaged	8 Fast ports		Mil/Aero	56
NEW	RES-SCE-AC-8MG miniature portable switch	IP67/68	Managed	8 Gb ports		Mil/Aero	58
NEW	RESMLAC-8US-CAPS military Ethernet switch MIL-DTL-38999 connectors	IP67/68	Unmanaged	8 Fast ports		Mil/Aero	60
NEW	RJSMLAC-8UG-CAPS military Ethernet switch MIL-DTL-38999 connectors	IP67/68	Unmanaged	8 Gb ports		Mil/Aero	62
NEW	RJSMLAC-8MG-CAPS military Ethernet switch RJFTV connectors	IP67/68	Managed	8 Gb ports		Mil/Aero	64
NEW	RESMLAC-8MG-CAPS military Ethernet switch MIL-DTL-38999 connectors	IP67/68	Managed	8 Gb ports		Mil/Aero	66
NEW	RESMLAC-8MG-CAPS-F35 military Ethernet switch MIL-DTL-38999 connectors	IP67/68	Managed	8 Gb ports		Mil/Aero	68
NEW	RESMLAC-28MG military Ethernet switch	IP67/68	Managed	24 Gb + 4 combo 10G ports		Mil/Aero	70
	RJSML-8US1 & RJSML-8UG1 military Ethernet switch	IP67/68	Unmanaged	8 Gb ports		Mil/Aero	73
	RJSML-MG7F3G military Ethernet switch	IP67/68	Managed	7 fast + 3 Gb ports		Mil/Aero	77
	RJSPC industrial Ethernet switch *For ATEX version, see page 138*	IP67/68	Unmanaged	5 fast ports		Industrial	81

RUGGED USB SOLUTION SELECTION GUIDE

FIELD INSTALLABLE

Connectors	Series	Coupling Mechanism	Shape	Material	Specification	Prime Market	Page
NEW	USB3FTV (USB-A)	Thread	Circular	Metal	MIL-DTL-38999 Series III	Mil/Aero, Rail Mass Transit & Industrial	86
NEW	USB3F TV Transversally Sealed Receptacles	Thread	Circular	Metal	MIL-DTL-38999 Series III	Mil/Aero, Rail Mass Transit & Industrial	90
NEW	USB3F TV Hermetic receptacles	Thread	Circular	Metal	MIL-DTL-38999 Series III	Mil/Aero & Industrial	93
NEW 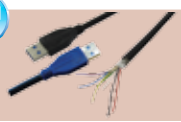	High reliability USB 3.0 Cordsets					Mil/Aero, Rail Mass Transit & Industrial	96
	USBFTV (USB-A)	Thread	Circular	Metal	MIL-DTL-38999 Series III	Mil/Aero, Rail Mass Transit & Industrial	97
	USBF TV Transversally Sealed Receptacles	Thread	Circular	Metal	MIL-DTL-38999 Series III	Mil/Aero, Rail Mass Transit & Industrial	100
	USBF TV Hermetic receptacles	Thread	Circular	Metal	MIL-DTL-38999 Series III	Mil/Aero & Industrial	102
	USBF TV special Receptacles with 360° EMI backshells	Thread	Circular	Metal	MIL-DTL-38999 Series III	Mil/Aero, Rail Mass Transit & Industrial	103
	Special USB version USB Through Bulkhead	Thread	Circular	Metal	MIL-DTL-38999 Series III	MII/Aero & Industrial	104
	USBF TV Stand-Off receptacles	Thread	Circular	Metal	MIL-DTL-38999 Series III	Mil/Aero, Rail Mass transit & Industrial	105
	High reliability USB 2.0 Cordsets					Mil/Aero, Rail Mass Transit & Industrial	109
	USBF SC Quick release series	Spring Release	Circular	Metal	N/A	Mil/Aero & Industrial	110
	USBBF TV (USB-B)	Thread	Circula	Metal	MIL-DTL-38999 Series III	Mil/Aero, Rail Mass Transit & Industrial	112
	USBBF TV Stand-off receptacles	Thread	Circular	Metal	MIL-DTL-38999 Series III	Mil/Aero, Rail Mass Transit & Industrial	115
	USBBF TV Transversally Sealed Receptacles	Thread	Circular	Metal	MIL-DTL-38999 Series III	Mil/Aero, Rail Mass Transit & Industrial	117
	Special USB adaptor for Military & Commercial Aeronautics	Circular	Metal			Aeronautic	120

	Connectors	Series	Coupling Mechanism	Shape	Material	Specification	Prime Market	Page
CABLE ASSEMBLIES		USB-A plastic with Self Closing Cap		Circular	Plastic	N/A	Industrial & Telecom	122
		USB B Field Plastic shell Overmolded cordset plug	Thread	Circular	Plastic	N/A	Industrial & Telecom	125
RUGGED ELECTRONICS		Reinforced USBF TV Memory Keys	Thread	Circular	Metal	MIL-DTL-38999 Series III	Mil/Aero & industrial	128
		Reinforced USB Memory Keys	Bayonet	Circular	Metal	N/A	Mil/Aero & Industrial	129
	NEW	Reinforced USB 2.0 amplifier	Thread	Circular	Metal	MIL-DTL-38999 Series III	Mil/Aero & Industrial	130

RUGGED ATEX ZONE 2 SOLUTION GUIDE

	Connectors	Series	Coupling mechanism	Shape	Material	Specification	Prime Market	Page
RUGGED ELECTRONICS		RJFTVX, USBFTVX RJ11FTVX	IP68	Metal & Plastic			Factory Automation, Video, Oil & Gaz	132

Connectors	Series	Sealing	Material	Number of ports	Unmanaged	Ring	Prime Market	Page
	RJSPCEX	IP68	Plastic	5	X	X	Oil & Gas	138

OTHER RUGGED SOLUTIONS

	Connectors	Series	Coupling Mechanism	Shape	Material	Specification	Prime Market	Page
FIELD INSTALLABLE		FWFTV (FireWire)	Thread	Circular	Metal	MIL-DTL-38999 Series III	Mil/Aero & Video	140
		RJ11F (RJ11)	Bayonet	Circular	Metal	MIL-C-26482	MIL/Aero & Industrial	144
	NEW	Special RJ11 adaptor for Military & Commercial Aeronautics		Circular	Metal		Aeronautic	146
		MTRJFTV (MTRJ)	Thread	Circular	Metal	MIL-DTL-38999 Series III	Mil/Aero & Rail Mass Transit	148
		LC Field	Thread	Circular	Metal	MIL-DTL-38999 Series III	Mil/Aero & Rail Mass Transit	150

NOTES

Rugged Ethernet Solutions

Field installable

Table of contents

RJF RB: plastic circular shell - reverse bayonet coupling 10
RJF544: plastic circular shell - push pull coupling 13
RJF EZ: plastic rectangular shell - lever coupling 15
RJF: metallic circular shell based on MIL-DTL-26482 H - bayonet coupling 17
RJF special receptacles: cable mount inline & PCB tails receptacles 20
NEW RJF - Receptacles & plugs with 360° EMI backshells 21
NEW RJF - Environmentaly sealed, transversally sealed receptacles 22
RJF - Hermetic receptacles 23
RJF for big insulation wire up to 1.6 mm [0.062 inch] 24
Self Closing Cap (SCC) for RJ Field receptacles 25
RJF TV: metallic circular shell based on MIL-DTL-38999 series III - thread coupling with anti-decoupling device 26
RJF TV Self Closing Cap (SCC) 29
RJF TV receptacles and plugs with 360° EMI backshells 30
RJF TV Through bulkhead receptacles 32
RJF TV Stand off receptacles 33
NEW RJF TV - Environmentaly sealed, Transversally sealed receptacles 36
NEW RJF TV Hermetic receptacles 37
NEW RJF TV for big insulation wire up to 1.6 mm 38
RJ45/M12 adaptators 39
Special RJ45 adaptators for Military & Commercial Aeronautics 40
High reliability Cat 5E Ethernet cable & cordsets 41
NEW High reliability Cat 6 Ethernet cable & cordsets 42
NEW High reliability Cat 6A Ethernet cable & cordsets 43

RJF RB

Ethernet connection system for harsh environment – Industrial Ethernet

IDC Receptacle
CAT 6

PCB Receptacle

RJFRB allows you to use an Ethernet Class D / Cat 5e and Class E / Cat 6 connection for 10 BaseT, 100 BaseTX or 1000 BaseT networks in harsh environments.
With the patented RJStop® system you can use a standard RJ45 cordset in a protective **composite** plug which will protect it from shocks, dust and fluids.
No hazardous on-field cabling and grounding!

Applications

- Telecom equipments
- Video control
- Robotics
- Industrial process control
- CNC machines
- Special machines
- Motion control

Main characteristics

- Sealed against fluids and dust (IP68)
- Shock, vibration and traction resistant
- No cabling operation in field, no tools required
- **Reverse bayonet coupling**
- RJ45 cordset retention in the plug: 70 N in the axis
- Mating cycles: 500 min
- Compatible with cable diameter from 5,5 mm [0.216 in] to 7 mm [0.275 in]

Environmental protection

- Sealing: IP68
- Salt spray > 1000 h
- Fire retardant / Low smoke: UL94 V0 and NFF 16102, DIN 5510-2
- Thermal shock: 5 cycles at - 40°C / +100°C
- Operating temperature: - 40°C / +85°C

Data transmission

10 BaseT, 100 BaseTX and 1000 BaseT networks
Cat 5e per TIA/EIA 568B and ClassD per ISO/IEC 11801
Cat6 per TIA/EIA 568B and ClassE per ISO/IEC 11801

Part number code

RJF RB	7	1RA
Shell type **6**: composite reverse bayonet plug, plastic gland **7**: composite jam nut receptacle		
Back terminations *(for receptacles only)* **1**: female RJ45 **1RA**: right angle female RJ45 **2**: RJ45 Cordset **3U**: IDC cat6 - unshielded **3F**: IDC cat6 - partial shielding **3S**: IDC cat6 - 100% shielded **5**: straight PCB		
Cordset length *(for receptacles with "2" back termination only)* **03 100BTX**: 0.3m *[11.81 inches]* **05 100BTX**: 0.5m *[19.68 inches]* **10 100BTX**: 1m *[39.37 inches]* **15 100BTX**: 1.5m *[59.05 inches]*		
Remark: cabling configuration → 100 BTX = 568B (Ethernet specification)		

Examples:
- Plug: RJF RB 6
- Receptacle, female RJ45 Back termination: RJF RB 71
- Receptacle, right angle female RJ45 back termination: RJF RB 71RA
- Receptacle, 1,5m [59.05"] RJ45 cordset termination: RJF RB 72 15 100BTX

Plug

■ Type 6 shell with plastic gland

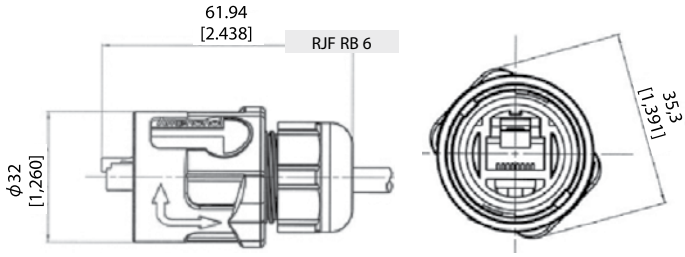

Receptacles

■ Type 1: female RJ45
(front mounting)

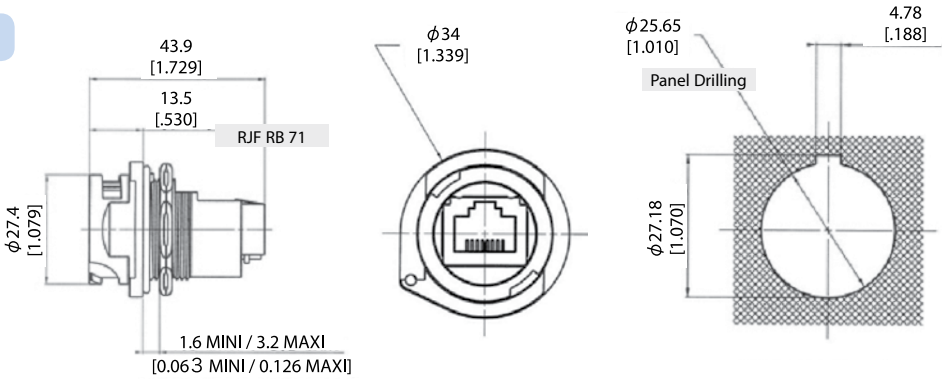

■ Type 1RA: right angle female RJ45
(front mounting)

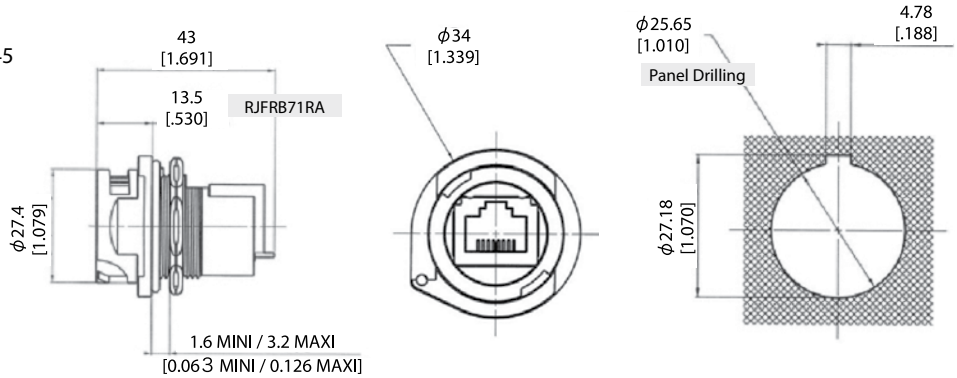

■ Type 2: RJ45 cordset
(front mounting)

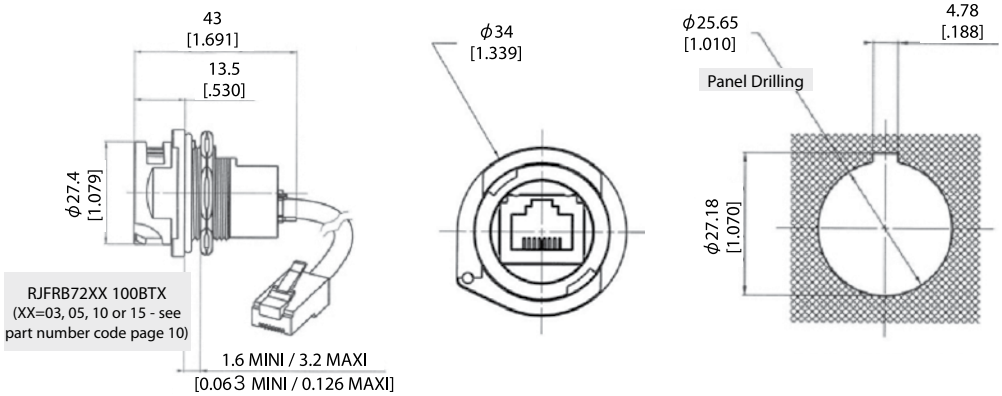

■ Type 3: IDC **CAT 6** termination
(rear mounting)

Unshielded: **RJF RB 73U**
Partial shielding **RJF RB 73F**

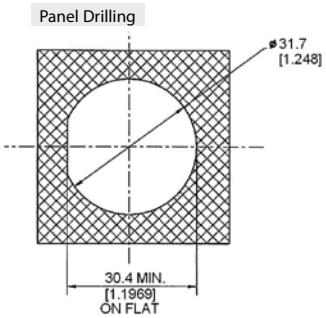

Shielded: **RJFRB73S**

Amphenol

■ Straight PCB termination receptacle:
(rear mounting)

Part number: RJF RB 75

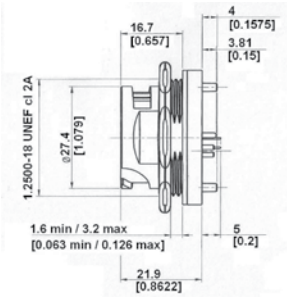

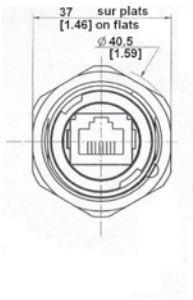

Panel Drilling

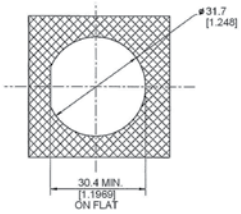

PCB drilling RJFRB

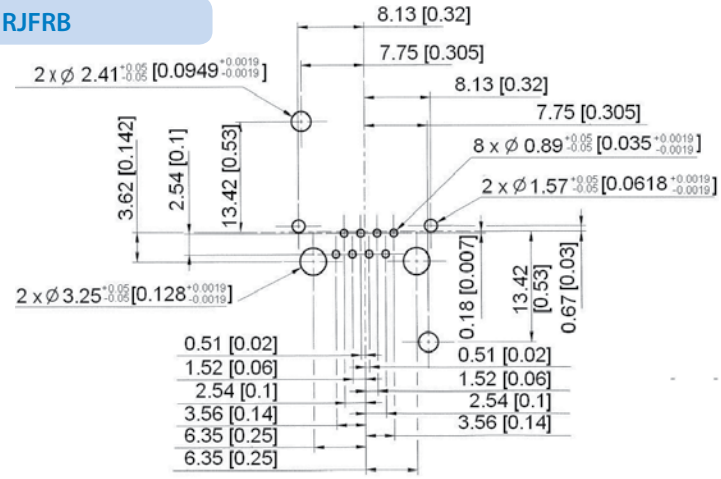

IMPORTANT NOTE
The customer's PCB design will determine the receptacle category.

Assembly instructions

1

2

3

4

5

6

7

8

Accessories

■ **IP68 Dust caps**

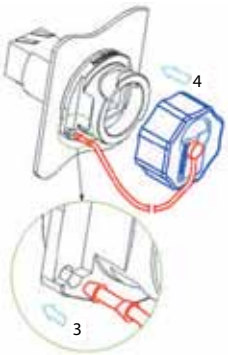

RJF RB C7
Cap for receptacles RJFRB71 / 71RA / 72xxx

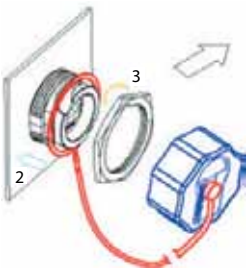

RJF RB C75
Cap for receptacles RJFRB75 and RJFRB73x

RJF 544

Ethernet connection system for harsh environment – Industrial Ethernet

RJF544 allows you to use an Ethernet Class D / Cat 5e connection for 10 BaseT, 100 Base TX or 1000 BaseT networks in harsh environments.
With the patented RJStop® system you can use a standard RJ45 cordset in a protective **composite** plug which will protect it from shocks, dust and fluids.

No hazardous on-field cabling and grounding !

Applications

- Telecom equipment
- Video control
- Robotics
- Industrial process control
- CNC machines
- Special machines
- Motion control
- Tele-maintenance

Now available with tranversal sealing*
***Seald in unmated condition**

Main characteristics

- Compliant with IEC 60603-7 variante 12
- Shock, vibration and traction resistant
- No cabling operation in field and no tools required
- Sealed against fluids and dust (IP68)
- **Quick push pull coupling**
- RJ45 cordset retention in the plug: 100 N in the axis
- Mating cycles: 500 min
- Improved EMI Protection
- Compatible with cable diameter from 6 mm [0.236 in] to 13 mm [0.512 in]

Environmental Protection

- Sealing: IP68
- Salt spray > 1000 h
- Fire retardant / Low smoke: UL94 V0 and NFF 16102, DIN 5510-2
- Vibrations: 10 – 500 Hz, 10 g, 3 axes: no discontinuity > 10 nano s.
- Thermal shock: 5 cycles at - 40°C / +100°C
- Operating temperature: - 40°C / +85°C

Data Transmission

10 BaseT, 100 BaseTX and 1000 BaseT networks
Cat 5e per TIA/EIA 568B and ClassD per ISO/IEC 11801

Part number code

RJF 544	2	2	03 100BTX
Shell type **6**: composite push pull plug, plastic gland **2**: composite square flange receptacle **2S**: composite square flange receptacle transversally sealed **2M**: metallized (Ni) composite square flange receptacle **2SM**: metallized (Ni) composite square flange receptacle transversally sealed			
Back terminations *(for receptacles only)* **1**: female RJ45 **1RA**: right angle female RJ45 **2**: RJ45 cordset			
Cordset length *(for receptacles with "2" back termination only) - Other lengths are available on demand* **03 100BTX**: 0.3 meters *[11.81 inches]* **05 100BTX**: 0.5 meters *[19.68 inches]* **10 100BTX**: 1 meter *[39.37 inches]* **15 100BTX**: 1.5 meters *[59.05 inches]* **00**: 8 tinned holes at the rear of the PCB to solder the cable			
Remark: cabling configuration → 100 BTX = 568B (Ethernet specification)			

Examples:
- Plug: RJF 544 6
- Square flange receptacle, female RJ45 back termination: RJF 544 21
- Metallized square flange receptacle, female RJ45 back termination: RJF 544 2M 1
- Square flange receptacle, 1,5m [59.05"] 100 BTX cordset termination: RJF 544 22 15 100BTX
- Square flange receptacle, solder termination: RJF 544 22 00
- Transversally sealed receptacle female RJ45 back termination: RJF544 2S1

Plug

- Type 6 shell with plastic gland

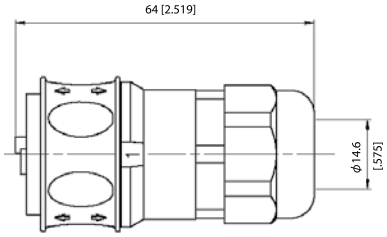

RJF 544 6

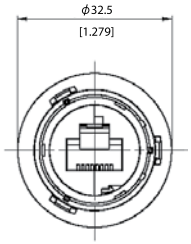

Receptacle

- Type 2S/2M/2SM shell: square flange receptacle with 4 mounting holes

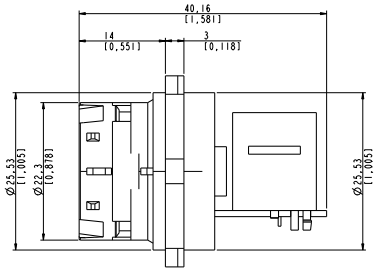

RJF 544 2x 1 RA

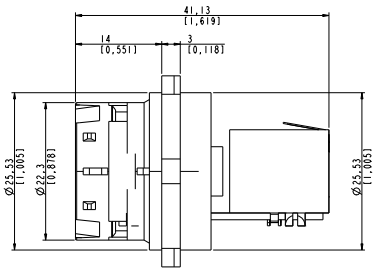

RJF 544 2x 1

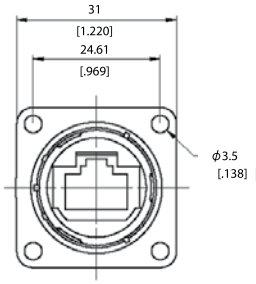

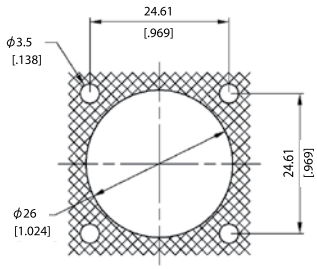

Panel Drilling
(same as#16 MIL-C-5015)

Back terminations

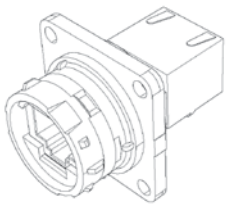

Type1: female RJ45

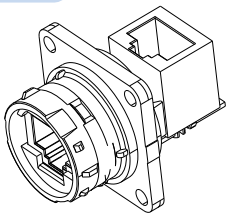

Type1RA: right angle female RJ45

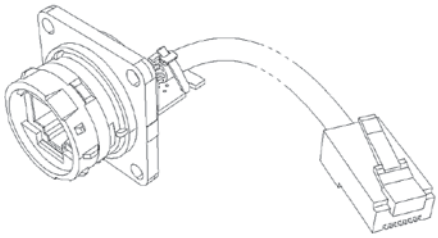

Type2: RJ45 cordset

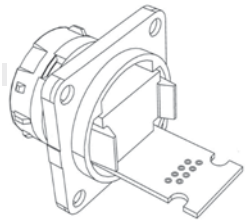

Type 2 - 00: solder - 8 tinned holes

Notes: type 2 without RJ45 plug at the end of the cable is also available: consult factory

Accessories

- **Rubber IP68 receptacle cap p/n RJF 544BESC**

- **Panel gasket p/n RJF 544 02JE**

- **IP68 caps for plug p/n 544 02 BM**

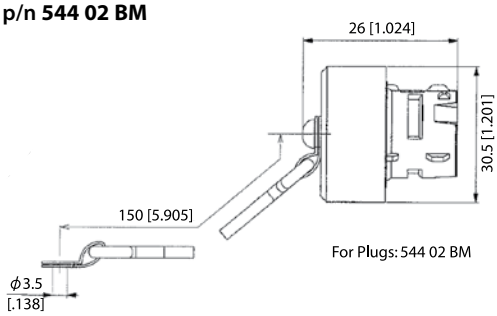

For Plugs: 544 02 BM

- Panel gasket (thickness: 0.6mm [.039]): p/n **RJF 544 02 JE**
- Plug Insert removal tool: p/n **5440 OT 02**

RJF EZ

Ethernet connection system for harsh environment – Industrial Ethernet

RJFEZ allows you to use an Ethernet Class D / Cat. 5e connection for 10 BaseT,100 BaseTX or 1000 BaseT networks in harsh environments. With the patented RJStop® system you can use a standard RJ45 cordset in a protective **composite** plug which will protect it from shocks, dust and fluids.
No hazardous on-field cabling and grounding!

Applications

- Telecom equipment
- Video control
- Robotics
- Industrial process control
- CNC machines
- Special machines
- Motion control
- Tele-maintenance

Main characteristics

- Compliant with IEC 60603-7 variante 13
- Sealed against fluids and dust (IP68)
- Shock, vibration and traction resistant
- No cabling operation in field and no tools required
- **Quick lever coupling**
- RJ45 cordset retention in the plug: 70 N in the axis
- Mating cycles: 500 min
- Compatible with cable diameter from 5,5 mm [0.216 in] to 7 mm [0.275 in]

Environmental protection

- Sealing: IP68
- Salt spray > 1000 h
- Fire retardant / Low smoke: UL94 V0 and NFF 16102, DIN 5510-2
- Thermal shock: 5 cycles at - 40°C / +100°C
- Operating temperature: - 40°C / +85°C

Data transmission

10 BaseT, 100 BaseTX and 1000 BaseT networks
Cat 5e per TIA/EIA 568B and ClassD per ISO/IEC 11801

Part number code

	RJF EZ	2	2	03 100BTX
Shell type **6**: composite lever plug, plastic gland **2**: composite square flange receptacle				
Back terminations *(for receptacles only)* **1**: female RJ45 **2**: RJ45 cordset				
Cordset length *(for receptacles with "2" back termination only)* **03 100BTX**: 0.3m [11.81 inches] **05 100BTX**: 0.5m [19.68 inches] **10 100BTX**: 1m [39.37 inches] **15 100BTX**: 1.5m [59.05 inches]				
Remark: Cabling configuration → 100 BTX = 568B (Ethernet specification)				

Examples:
- Plug: RJF EZ 6
- Receptacle, female RJ45 back termination: RJF EZ 21
- Receptacle, 1,5m [59.05"] 100 BTX cordset termination: RJF EZ 22 15 100BTX

Plug

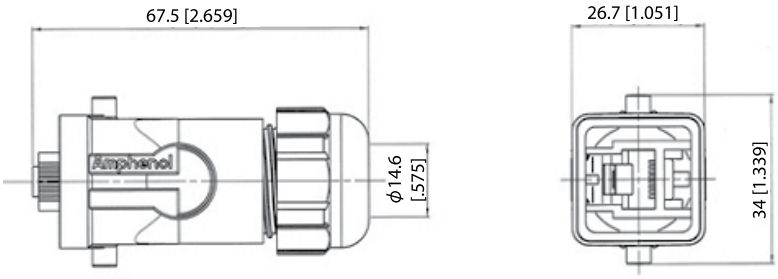

Receptacles

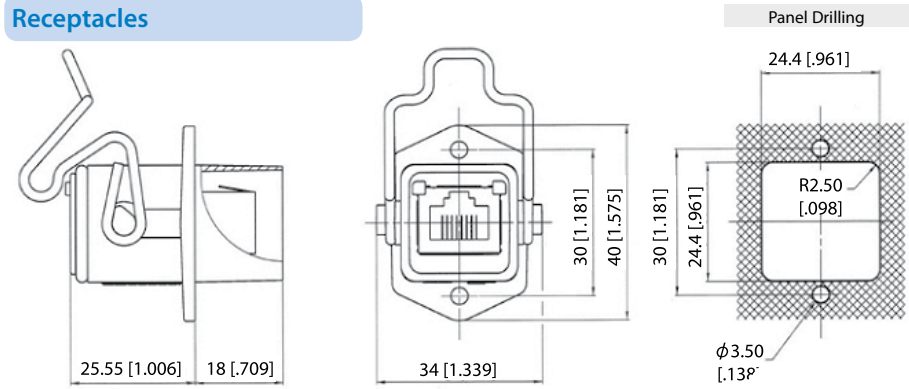

Back terminations

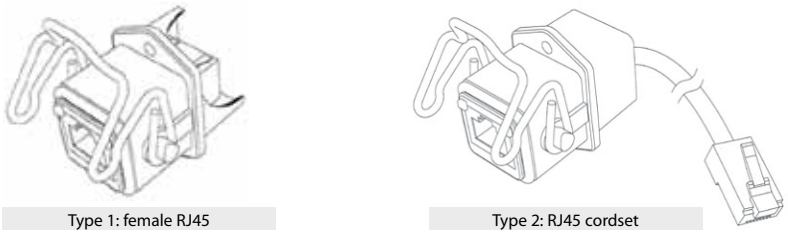

Type 1: female RJ45

Type 2: RJ45 cordset

Notes: type 2 without RJ45 plug at the end of the cable is also available: consult factory

Assembly instructions

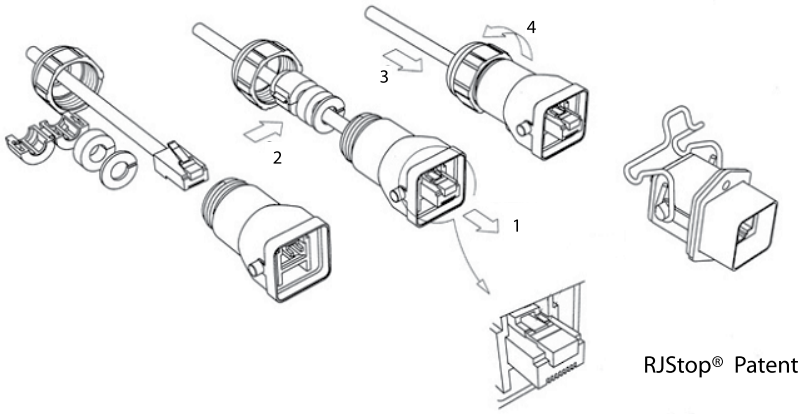

Accessories

- **IP68 dust caps**
  For plugs: **not available**
  For receptacles: **RJF EZ BE**

- **Panel gasket**
  Thickness: 1 mm [.039]
  Part No. **RJF EZ JE**

RJF

Ethernet connection system for harsh environment – Industrial Ethernet

RJF allows you to use an Ethernet Class D / Cat. 5e connection for 10 BaseT,100 BaseTX or 1000 BaseT networks in harsh environments.
With the patented RJStop®system you can use a standard RJ45 cordset in a **metallic** plug which will protect it from shocks, dust and fluids.
No hazardous on-field cabling and grounding!

Main characteristics

- Compliant with IEC 60603-7 variante 11
- **Bayonet coupling** ("Audible & Visual" coupling signal)
- **Robust metallic shells based on MIL-DTL-26482 H - Shell size 18**
- RJ45 cordset retention in the plug: 100 N in the axis
- Mating cycles: 500 min
- Sealed against fluids and dust (IP68)
- Shock, vibration and traction resistant
- No cabling operation in field and no tools required
- Mechanical coding / polarization (4 positions)
- Compatible with cable diameter from 6 mm [0.236 in] to 13 mm [0.512 in]
  For smaller diameters, please consult us.

Environmental protection

- Sealing: IP68
- Salt spray: 48 h with nickel plating
  > 96 h with black coating
  < 500 h with olive drab cadmium
- Fire retardant/Low smoke: UL94 V0 and NF F 16 101 & 16 102
- Vibrations: 10-500Hz, 10g, 3 axes: no discontinuity >10 nano s
- Shocks: IK06 ►weight of 250 g drop from 40cm
  [15.75 in] onto connectors (mated pair)
- Humidity: 21 days, 43°C, 98% humidity
- Thermal shock: 5 cycles at -40°C / +100°C
- Temperature range: -40°C / +85°C
- Storage temperature:

Applications

- Robotics
- Industrial process control
- CNC machines
- Special machines
- Oil & Gas
- Motion control
- Data acquisition and transmission in harsh environment
- Tele-maintenance

Data transmission

10 BaseT, 100 BaseTX and 1000 BaseT networks Cat 5e per TIA/EIA 568B and ClassD per ISO/IEC 11801

Part number code

RJF	2	2	B	03 100BTX

Shell type
6: plug, plastic gland
6M: plug, metal gland
2: square flange receptacle
2PE: square flange receptacle, IP68 backshell, plastic gland
2PEM: square flange receptacle, IP68 backshell, metal gland
7: jam nut receptacle
7PE: jam nut receptacle, IP68 backshell, plastic gland
7PEM: jam nut receptacle, IP68 backshell, metal gland
Nota: *also available a transversally sealed receptacle (unmated)* ► *see page 22*

Back terminations *(for receptacles only)*
1: female RJ45
1RA: right angle female RJ45
2: RJ45 cordset

Shell finishes
B: black Coating - *ROHS compliant*
N: nickel *(note: with this version, the inserts are metallized) - ROHS compliant*
G: olive drab cadmium *(note: with this version, the inserts are metallized)*
BZC: aluminium shell - black zinc cobalt plating
ZC: aluminium shell - green zinc cobalt plating - *ROHS compliant*

Cordset length *(for receptacles with "2" back termination only) - Other lengths are available on demand*
03 100 BTX: 0.3m *[11.81 inches]*
05 100 BTX: 0.5m *[19.68 inches]*
10 100 BTX: 1m *[39.37 inches]*
15 100 BTX: 1.5m *[59.05 inches]*
00: 8 tinned holes at the rear of the PCB to solder the cable
OPEN: open cable - with no plug at the end

Remark: Cabling configuration → 100 BTX = 568B (Ethernet specification)

Examples:
- Nickel plug: RJF 6 N
- Black square flange receptacle, female RJ45 back termination: RJF 2 1 B
- Olive drab cadmium jam nut receptacle, 1.5m [59.05"] 100 BTX cordset termination: RJF 7 2 G 15 100BTX
- Black in line square flange receptacle, 30cm [11.81"] 100BTX cordset termination: RJF 2PE 2 B 03 100BTX
- Nickel jam nut receptacle, solder termination: RJF 72 N 00

Plug

■ Shell type 6 with plastic or metal gland

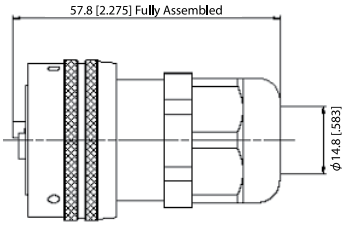

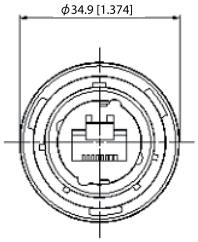

Receptacles

■ Square flange receptacle • 4 mounting holes: shell type 2

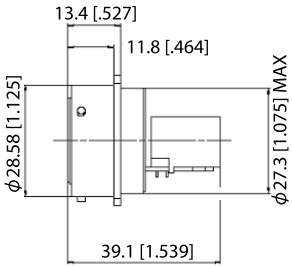

RJF 21 X (Straight Female RJ45)

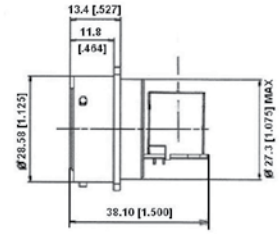

RJF 21 RA X (Right Angle Female RJ45)

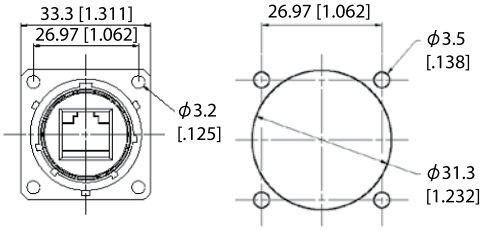

Panel Drilling

■ Jam nut receptacle • Hexagonal nut mounting: shell type 7

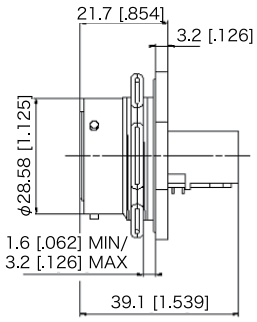

RJF 71 X (straight female RJ45)

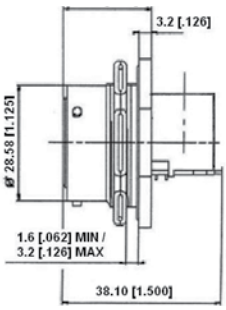

RJF 71 RA X (right angle female RJ45)

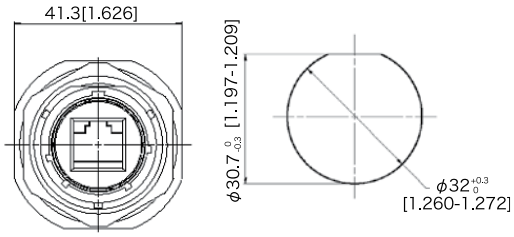

Panel drilling

■ Receptacles with IP68 backshell : shell type 2PE and 7PE with plastic or metal gland

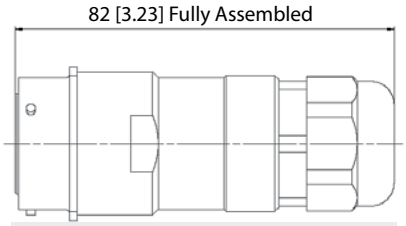

RJF 2PE/2PEM

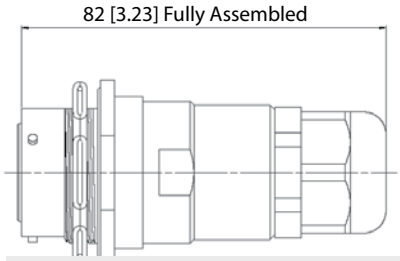

RJF 7PE/7PEM

Back terminations

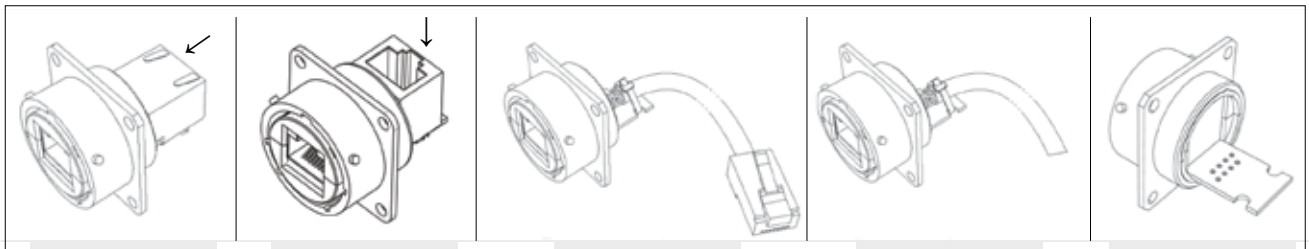

Type **1** *Female RJ45*	Type **1RA** *Right angle female RJ45*	Type **2** *RJ45 cordset*	Type **OPEN** *No plug at the end*	Type **2 - 00** *Solder - 8 tinned holes*

Universal: can be used with all standard RJ45 Cat.5e cordset brands.

Assembly instructions of the RJ Stop

1. Push down the RJ45 cordset latch, and fix it inside the insert
2. Press in and click the other part of the insert
3. Insert in the metallic housing

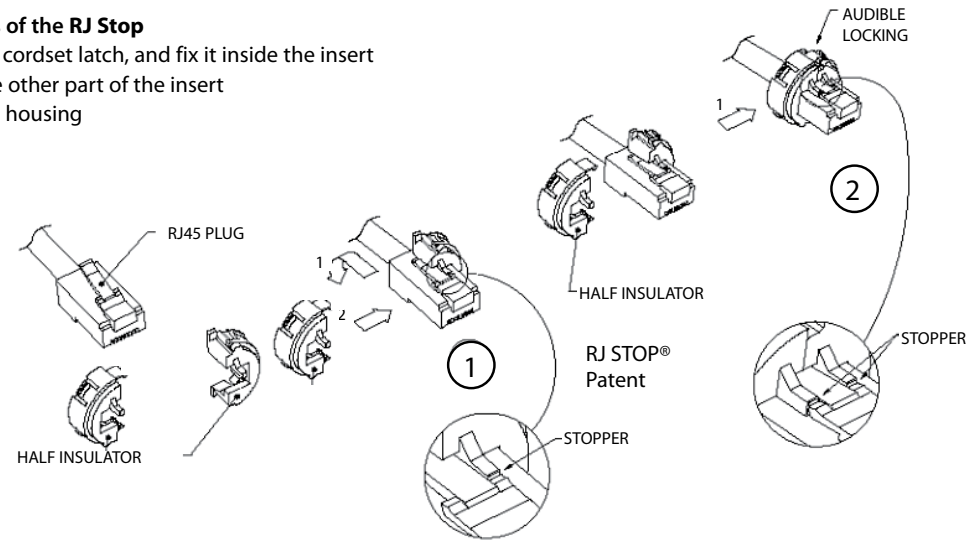

Easy and safe - No field cabling tools required for cabling

Assembling of the plug.

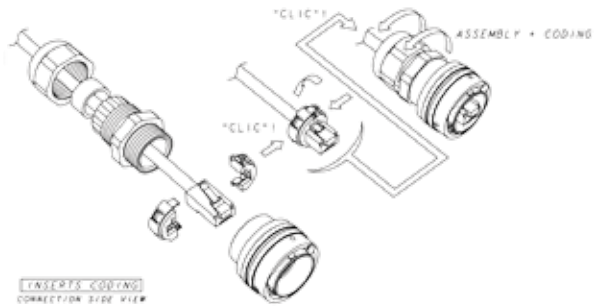

4 codings possibilities
(defined by the customer during the assembling).

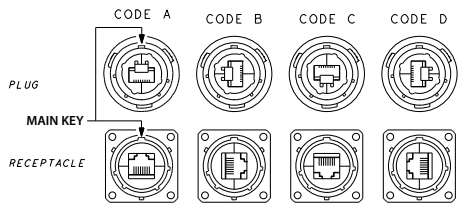

Assembling of the receptacle.

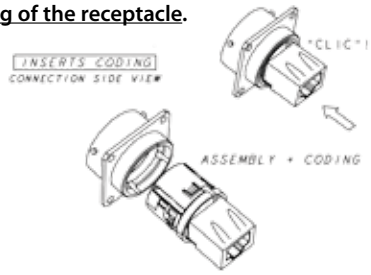

IMPORTANT NOTE: to remove the insert, use the

- **Insert removal tool for receptacle and plug**

P/N: **RJF ODE**

Accessories

- **Metallic cap**

	RJFC	2	G
Connector type **6**: plug **2**: square Flange Receptacle **7**: jam Nut Receptacle			
Shell material & finish **B**: black coating - *ROHS compliant* **N**: aluminium shell - nickel plating - *ROHS compliant* **G**: aluminium shell - olive drab cadmium plating			

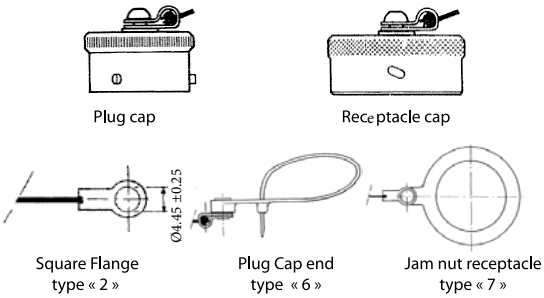

- **Panel gasket for square flange 2 »thickness - 0,6 mm**

P/N: **JE 18**

Amphenol

RJF

Special receptacles: cable mount inline & PC tails

Inline cable mount receptacles

Inline receptacles allow you to make cable extensions in the field by using them with rugged RJ Field series plugs.

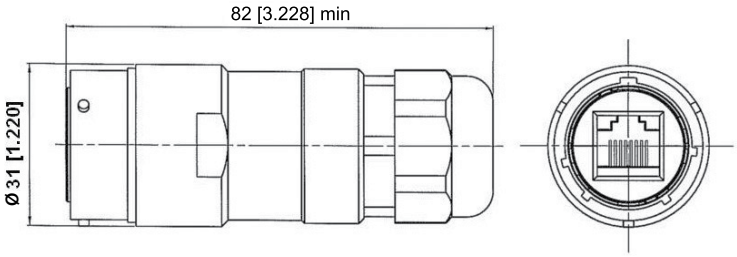

	Plating	Plastic gland	Metallic gland
Part number	Black coating - *ROHS compliant*	**RJF2PEWF1B**	**RJF2PEMWF1B**
	Nickel - *ROHS compliant*	**RJF2PEWF1N**	**RJF2PEMWF1N**
	Olive drab cadmium	**RJF2PEWF1G**	**RJF2PEMWF1G**

PC tails receptacles

These receptacles can be soldered directly on your PCB. A compound insures a transversal sealing and good performance in high vibration environments. They can be connected with rugged RJField series plugs.

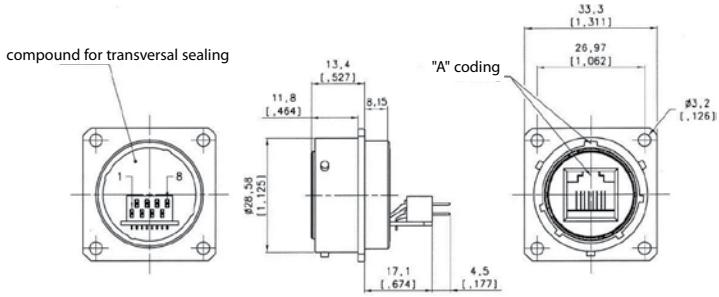

PCB LAYOUT – SOLDER FACE VIEW

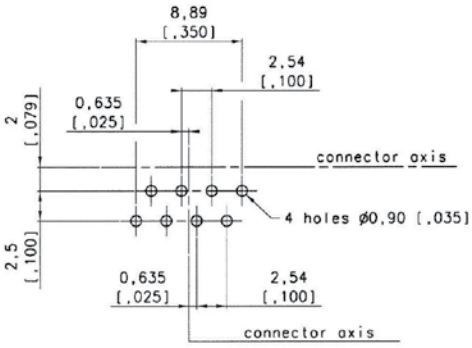

Panel Drilling

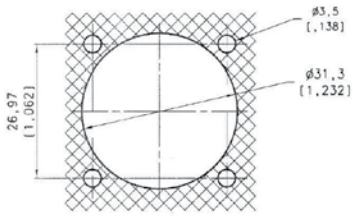

	Plating	Part number
Part number	Black coating - *ROHS compliant*	**RJF 2S X 5B**
	Nickel - *ROHS compliant*	**RJF 2S X 5N**
	Olive drab cadmium	**RJF 2S X 5G**

X to be replaced by the letter of the coding position you need (A, B, C, or D) ▷

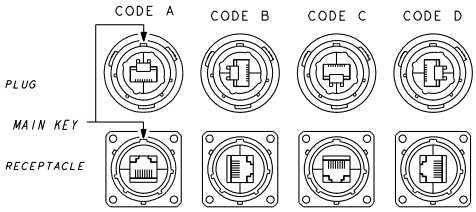

RJF

Receptacles & plugs with 360° EMI backshell

RJF series receptacles and plugs with EMI backshells provide a solution with 360° shielding: same protection than the one proposed by standard MIL-DTL-26482H connectors. With those solutions we recommend using our reinforced and double shielded Cat5E, Cat6, or Cat6A cable ▶ *see pages 41-42-43*.

Square flange receptacle - *Straight backshell*

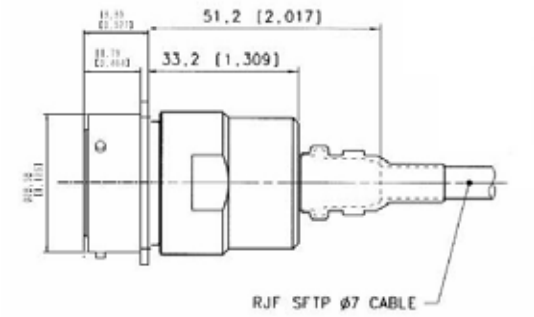

Panel Drilling

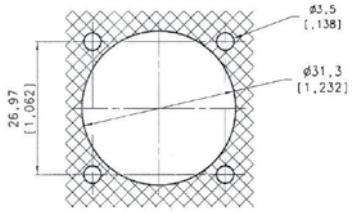

Part number	Plating	Part number
	Nickel - *ROHS compliant*	**Kit30439NI**
	Olive drab cadmium	**Kit30439**

Kit30439 & Kit30439NI include:

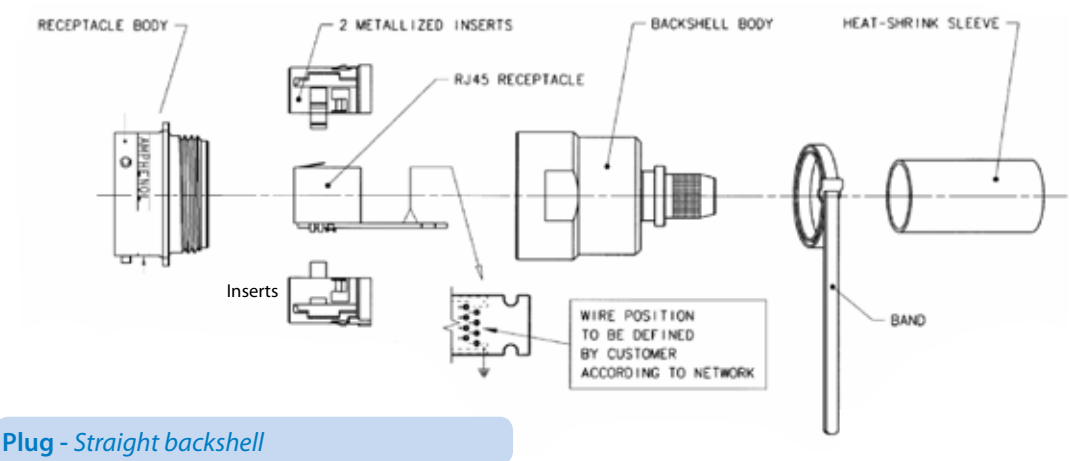

Plug - *Straight backshell*

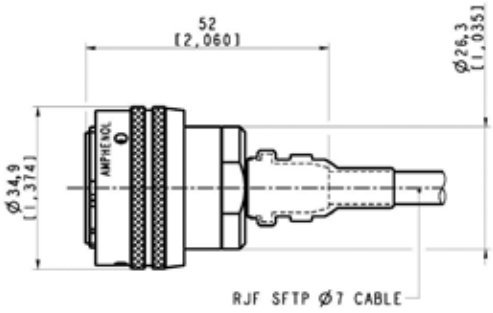

Part number	Plating	Part number
	Nickel - *ROHS compliant*	**Kit30394NI**
	Olive drab cadmium	**Kit30394**

Kit30394 & Kit30394NI include:

ROHS COMPLIANT
N, B & BZ

RJF

Environmentaly sealed receptacles, transversally sealed receptacles

In some applications, a transversal sealing for the receptacle is a « must ». This will prevent fluids and dust from going through the receptacle when plug or cap are not mated to the receptacle.
The sealed solution (version "S") has a compound at the rear of the receptacle as shown on the examples below. This feature is available both in RJF and RJF TV shells (please consult the relevant data sheet for product details and accessories).
In addition, the Sealed RJF TV has been successfully tested in very high vibration corresponding to airplane applications.

Applications

- Outdoor equipment
- Airplanes equipment
- Tactical radios
- Shelters
- Rugged computers
- Data acquisition and transmission in harsh environments

Data transmission

10 BaseT, 100 BaseTX and 1000 BaseT networks
Cat 5e per TIA/EIA 568B and ClassD per ISO/IEC 11801

Main characteristics

- Same as the RJF and RJF TV series.
- A complete IP68 sealing of the receptacle (even with no plug or no protective cap mated) is added.
- Outside dimensions are the same as the standard RJF and RJF TV series.
- Vibrations: the compounded versions of the RJF TV have been tested in vibration following the NAS 1599 Aeronautic specification (Ambient temperature):
  5 - 3000 Hz, 20g, 2,5 mm [.1 inch] double amplitude, 3 axes, 12 hours
  Note: this specification exceeds MIL-C-26500 requirements.

IMPORTANT NOTE

Due to the compound, the coding of the connector must be done in the factory : use the codes A, B, C or D in the part number: **see below**.

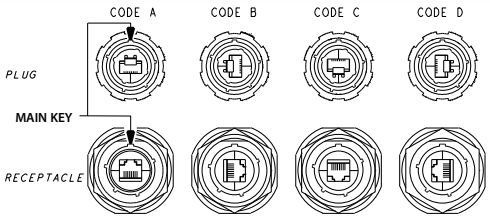

Example :
RJFTV 2S **A**2 G 15 100BTX

Part number code

	RJF	7S	A	2	G	03 100BTX
Series **RJF:** MIL-DTL-26482 H bayonet						
Shell type **2S:** sealed square flange receptacle **7S:** sealed jam nut receptacle						
Coding **A,B,C,D**						
Back terminations *(for receptacles only)* **1:** female RJ45 **1RA:** right angle female RJ45 **2:** RJ45 Cordset						
Shell material & finish **B:** aluminium shell - black coating - *ROHS compliant* **N:** aluminium shell - nickel plating - *ROHS compliant* **G:** aluminium shell - olive drab cadmium plating ***Nota**: for nickel and olive drab cadmium plating, receptacle inserts are metallized.*						
Cordset length *(For Receptacles with "2" Back Termination only) - Other lengths are available on demand* **03 100 BTX:** 0.3m [11.81 inches] **05 100 BTX:** 0.5m [19.68 inches] **10 100 BTX:** 1m [39.37 inches] **15 100 BTX:** 1.5m [59.05 inches] **OPEN**: open cable - with no plug at the end						

Remark: cabling configuration: 100 BTX = 568B (Ethernet specification)

Examples:
- *bayonet, sealed jam nut receptacle, A coding, with female RJ45 back termination, olive drab cadmium plating:* ***RJF 7SA 1 G***
- *bayonet, sealed square flange receptacle, A coding, with female RJ45 back termination, black plating:* ***RJF 2SA 1 B***
- *bayonet, sealed jam nut receptacle, A coding, 1.5m [59.05"] 100 BTX cordset, olive drab cadmium plating:* ***RJF 7SA 2 G15 100BTX***

RJF
Hermetic receptacles

ROHS COMPLIANT
N, B & BZ

In some applications, a transversal hermiticity for the receptacle is a « must ». This will prevent gas from going through the receptacle when plug or cap are not mated to the receptacle.
The hermetic solution (version "H") has a compound at the rear of the receptacle as shown on the examples below.
This feature is available both in RJF and RJF TV shells (please consult the relevant data sheet for product details and accessories).
Helium leakage is less than 1.10^{-6} cm^3 per second [0.1 micron cubic ft per hour] at one bar [15 psi] pressure differential.

Applications
- Outdoor equipment
- Airplanes equipment
- Tactical radios
- Shelters
- Rugged computers
- Data acquisition and transmission in harsh environments

Data Transmission
10 BaseT, 100 BaseTX and 1000 BaseT networks
Cat 5e per TIA/EIA 568B and ClassD per ISO/IEC 11801

Main characteristics
- Same as the RJF and RJF TV series.
- A complete IP68 sealing of the receptacle (even with no plug or no protective cap mated) is added.
- Outside dimensions are the same as the standard RJF and RJF TV series.
- Vibrations: the compounded versions of the RJF TV have been tested in vibration following the NAS 1599 Aeronautic specification (Ambient temperature):
  5 - 3000 Hz, 20g, 2,5 mm [.1 inch] double amplitude, 3 axes, 12 hours
  Note: this specification exceeds MIL-C-26500 requirements.

IMPORTANT NOTE
Due to the compound, the coding of the connector must be done in the factory: use the codes A, B, C or D in the part number: **see below**.

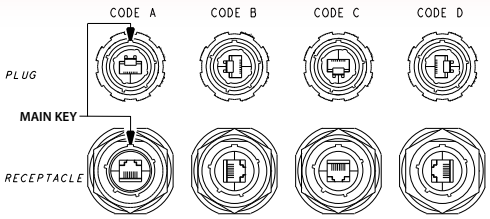

Example :
RJFTV 2H **A**2 N 15 100BTX

Part number code

Series **RJF:** MIL-DTL-26482 H bayonet	**RJF**	**7H**	**A**	**2**	**G**	**03 100BTX**
Shell type **2H:** transversally sealed and hermetic square flange receptacle **7H:** transversally sealed and hermetic jam nut receptacle						
Coding **A,B,C,D**						
Back terminations *(for receptacles only)* **1:** female RJ45 **1RA:** right angle female RJ45 **2:** RJ45 Cordset						
Shell material & finish **B:** aluminium shell - black coating - *ROHS compliant* **N:** aluminium shell - nickel plating - *ROHS compliant* **G:** aluminium shell - olive drab cadmium plating ***Nota**: for nickel and olive drab cadmium plating, receptacle inserts are metallized.*						
Cordset length *(for receptacles with "2" back termination only) - Other lengths are available on demand* **03 100 BTX:** 0.3m [11.81 inches] **05 100 BTX:** 0.5m [19.68 inches] **10 100 BTX:** 1m [39.37 inches] **15 100 BTX:** 1.5m [59.05 inches] **OPEN**: open cable - with no plug at the end						

Remark: cabling configuration: 100 BTX = 568B (Ethernet specification)

Examples:
- *bayonet, sealed jam nut receptacle, A coding, with female RJ45 Back termination, olive drab cadmium plating:* ***RJF 7HA 1 G***
- *bayonet, sealed square flange receptacle, A coding, with female RJ45 back termination, black plating:* ***RJF 2HA 1 B***
- *bayonet, sealed jam nut receptacle, A coding, 1.5m [59.05"] 100 BTX cordset, olive drab cadmium plating :* ***RJF 7HA 2 G15 100BTX***

RJF

Special plug for big insulation wire up to 1.6 mm [0.062 in]

Rugged plug dedicated to cable with insulation wire from 1,1 to 1,6 mm [from 0.043 in to 0.062 in]

Remark:
- Solution compatible with any RJF receptacle
- For cables which are not compatible with standard RJ45 plug.

Applications

- Robotics
- Industrial process control
- CNC machines
- Special machines
- Oil & Gas
- Motion control
- Data acquisition and transmission in harsh environment
- Tele-maintenance

Main characteristics

- **Bayonet coupling** ("Audible & Visual" coupling signal)
- **Robust metallic shells based on MIL-DTL-26482 H - Shell size 18**
- RJ45 cordset retention in the plug: 100 N in the axis
- Mating cycles: 500 min
- Sealed against fluids and dust (IP68)
- Shock, vibration and traction resistant
- Mechanical coding / polarization (4 positions)
- Compatible with cable diameter from 6 mm [0.216 in] to 13 mm [0.512 in], for smaller diameters, please consult us

Environmental protection

- Sealing: IP68
- Salt Spray: 48 h with nickel plating
  > 96 h with black coating
  > 500 h with oliv drab cadmium
- Fire retardant/Low smoke: UL94 V0 and NF F 16 101 & 16 102
- Vibrations: 10 – 500 Hz, 10 g, 3 axes: no discontinuity >10 nano s.
- Shocks: IK06 ► weight of 250 g drop from 40 cm [15.75 in] onto connectors (mated pair)
- Humidity: 21 days, 43°C, 98% humidity
- Thermal shock: 5 cycles at - 40°C / +100°C
- Temperature range: - 40°C / +85°C

Data transmission

10 BaseT, 100 BaseTX and 1000 BaseT networks
Cat 5e per TIA/EIA 568B and ClassD per ISO/IEC 11801

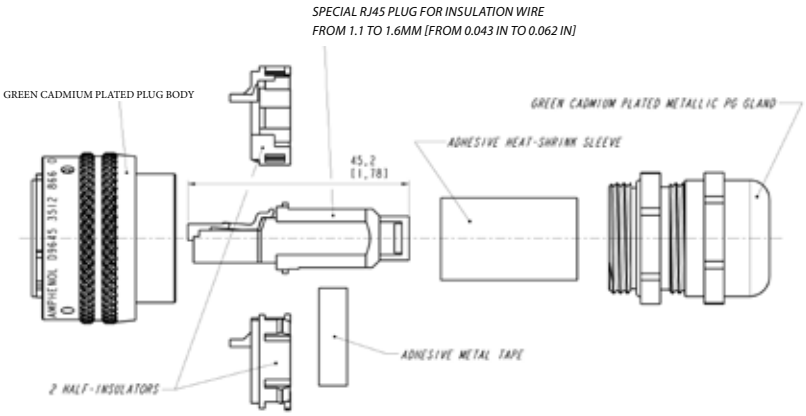

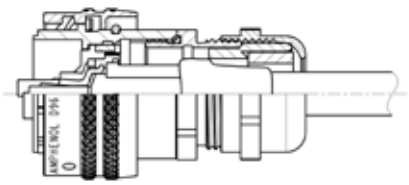

Part number	Plating	Part number
	Nickel - *ROHS compliant*	**Kit39992NI**
	Olive drab cadmium	**Kit39992G**

RJ Field Receptacle with Self Closing Cap

This kit includes a receptacle and a Self Closing Cap which protects the RJ Field square flange receptacles (MIL-C-26482 type).
This cap offers a protection against dust and water projections.
A spring automatically closes the upper part of the cap when either the RJfield plug, USB or IEEE1394 cordset, or USB key are removed from the receptacle.

Sealing level IP54
(Splash and dust Proof)

RJF 21 X SCC

RJ45 version

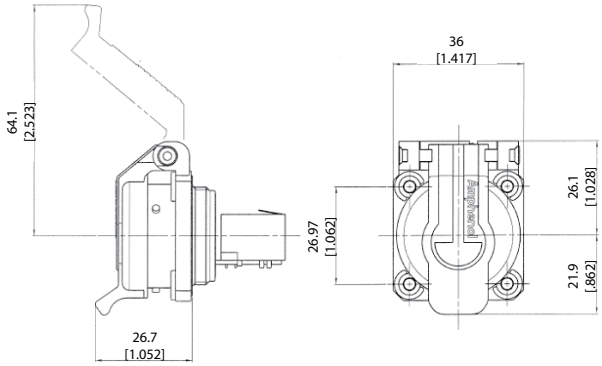

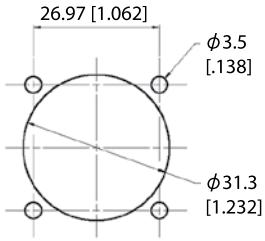

Panel Drilling

	Plating	Metallized insert (EMI)	Part number
Part number *	Black coating - *ROHS compliant*	No	**RJF 21B SCC**
	Nickel - *ROHS compliant*	Yes	**RJF 21N SCC**
	Olive drab cadmium	Yes	**RJF 21G SCC**

* *The part number includes the receptacle + the self closing cap*

Remarks:
- the back termination is female RJ45
- it could be used with our RJF series plug *(part number RJF6xx ► see page 17)*

■ **Note**: Panel gasket with any of these receptacles: **JE18**

USBF 21 x SCC, USBBF 21 x SCC, & IEEE1394

USB2.0 & 3.0 - A version
(see pages 94 & 107)

USB-B version
(see page 118)

IEEE1394 version
(see page 143)

Amphenol

RJF TV

Ethernet connection system for harsh environment

ROHS COMPLIANT N & BZ

RJFTV allows you to use an Ethernet Class D / Cat. 5e connection for 10 BaseT, 100 BaseTx or 1000 BaseT networks in harsh environments.
With the patented RJStop system you can use a standard RJ45 cordset in a **metallic** plug which will protect it from shocks, dust and fluids.
No hazardous on-field cabling and grounding!

Applications

- Data acquisition and transmission in harsh environment
- Railways
- Radars
- Shelters
- Battlefield communication
- Systems
- Navy

Data Transmission

10 BaseT, 100 BaseTX and 1000 BaseT networks
Cat 5e per TIA/EIA 568B and ClassD per ISO/IEC 11801

Main characteristics

- Sealed against fluids and dusts (IP68)
- Shock, vibration and traction resistant
- No cabling operation in field and no tools required
- Mechanical coding / Polarization (4 positions)
- Improved EMI protection
- **Tri Start Thread coupling mechanism (MIL-DTL-38999 series III type) with anti-decoupling device - Shell size 19**
- **Robust metallic shells**
- RJ45 cordset retention in the plug: 100 N in the axis
- Mating cycles: 500 min
- Compatible with cable diameter from 6 mm [0.236 in] to 13 mm [0.512 in], for smaller diameters please consult us

Environmental protection

- Sealing: IP68
- Salt spray: 48h with aluminium shell - Nickel, & black zinc cobalt plating
  > 500h with aluminium shell - Olive drab cadmium plating
  500 h with marine bronze shell
- Fire retardant/Low smoke : UL94 V0 and NF F 16 101 & 16 102
- Vibrations : 10 - 500 Hz, 10 g, 3 axes: no discontinuity > 10 nano s.
- Compounded versions tested per NAS 1599 (5-3000 Hz, 20g, 12h)
- Shocks: IK06 ▸weight of 250 g drop from 40 cm [15.75 in] onto connectors (mated pair)
- Humidity: 21 days, 43°C, 98% humidity
- Thermal shock: 5 cycles at -40°C / +100°C
- Temperature range: -40°C / +85°C

Part number code

RJF TV	2	2	G	03 100 BTX

Shell type
6: plug with plastic gland
6M: plug with metal gland
2: square flange receptacle
2PE: square flange receptacle, IP68 backshell, plastic gland
2PEM: square flange receptacle, IP68 backshell, metal gland
7: jam nut receptacle
7PE: jam nut receptacle, IP68 backshell, plastic gland
7PEM: jam nut receptacle, IP68 backshell, metal gland
Nota: *also available a transversally sealed receptacle (unmated)* ▶ *See page 36*

Back terminations *(receptacles only)*
1: female RJ45
1RA: right angle female RJ45
2: RJ45 Cordset

Shells material & Finish
N: aluminium shell - nickel plating *(receptacle inserts are metallized) - ROHS compliant*
G: aluminium shell - olive drab cadmium plating *(receptacle inserts are metallized)*
BZ: marine bronze shell *(receptacle inserts are metallized) - ROHS compliant*
BZC: aluminium shell - black zinc cobalt plating
ZC: aluminium shell - green zinc cobalt plating - *ROHS compliant*
ZN: aluminium shell - black zinc nickel plating - *ROHS compliant*

Cordset length *(type 2 back termination only) - Other lengths are available on demand*
03 100 BTX: 0.3m *[11.81 inches]*
05 100 BTX: 0.5m *[19.68 inches]*
10 100 BTX: 1m *[39.37 inches]*
00: 8 tinned holes at the rear of the PCB to solder the cable
OPEN: open cable - with no plug at the end

Remark: cabling configuration → 100 BTX = 568B (Ethernet specification)

Examples:
- Olive crab cadmium plug with plastic gland: RJF TV 6G
- Olive drab cadmium jam nut receptacle, female RJ45 back termination: RJF TV 71G
- Nickel jam nut receptacle, 1,5 m 100 BTX cordset back termination: RJF TV 72N 15 100BTX
- Olive drab cadmium in line square flange recept., 0,3 m 100 BTX cordset back termination: RJF TV 2PE 2 G 03 100BTX
- Nickel jam nut receptacle solder termination 8 tinned holes: RJF TV 22 N 00

Plug

■ Shell type 6 with plastic or metal gland

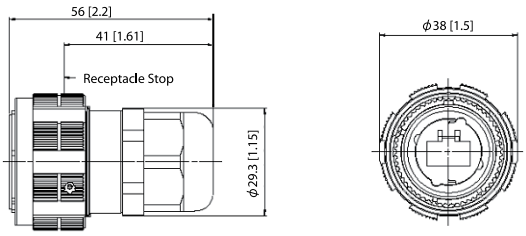

RJF TV 6 X

Receptacles

■ Square flange receptacle - 4 mounting holes: shell type 2

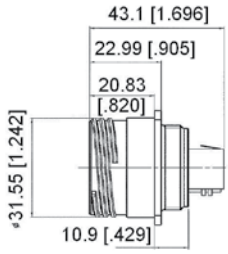

RJFTV 21 X (straight female RJ45)

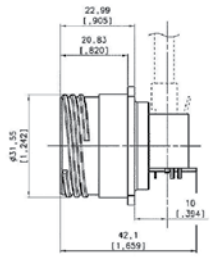

RJFTV 21 RA X (right angle female RJ45)

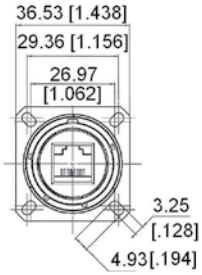

Panel Drilling

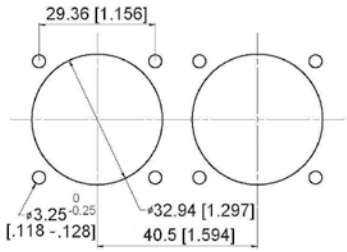

■ Jam nut receptacle - Hexagonal nut mounting: shell type 7

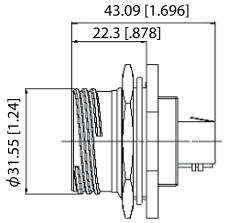

RJFTV 71 X (straight female RJ45)

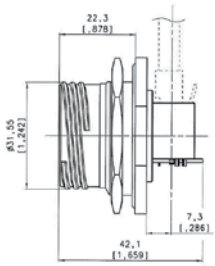

RJFTV 71 RA X (right angle female RJ45)

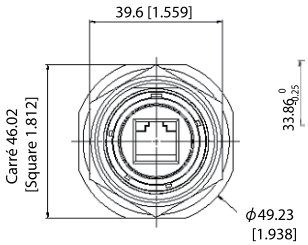

Panel drilling

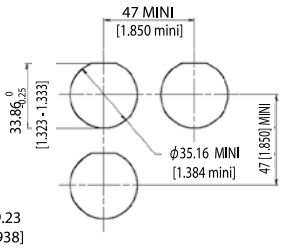

■ Receptacles with IP68 backshell: Shell type 2PE and 7PE with plastic or metal gland

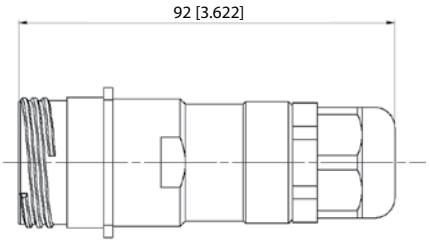

RJF TV 2PE/2PEM/7PE/7PEM

Back terminations

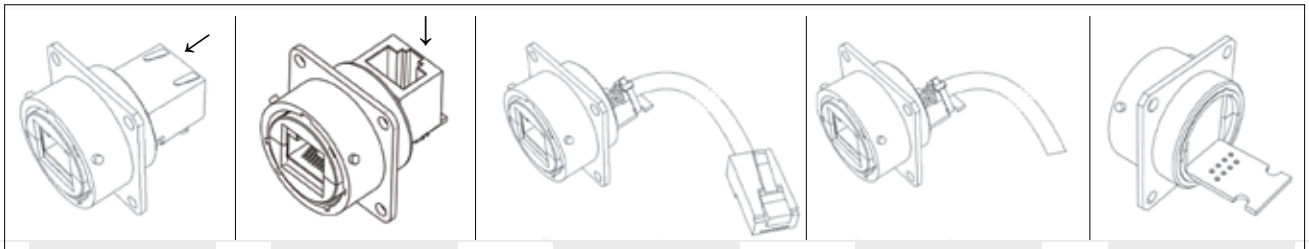

Type **1** *Female RJ45*	Type **1RA** *Right angle female RJ45*	Type **2** *RJ45 cordset*	Type **OPEN** *No plug at the end*	Type **2 - 00** *Solder - 8 tinned holes*

Amphenol

Assembly instructions

Insert codings

Assembling of the plug.

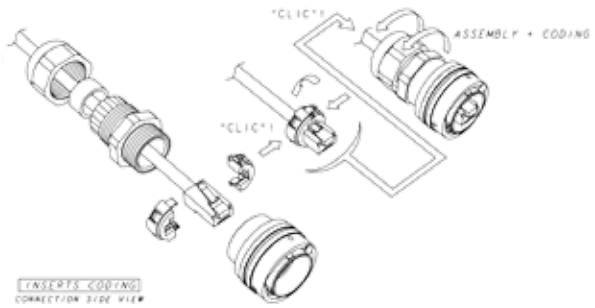

4 codings possibilities
(defined by the customer during the assembling).

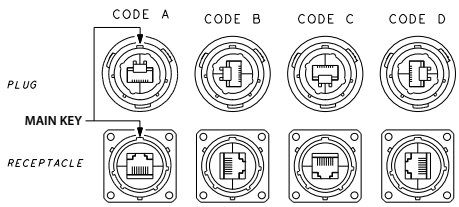

Assembling of the receptacle.

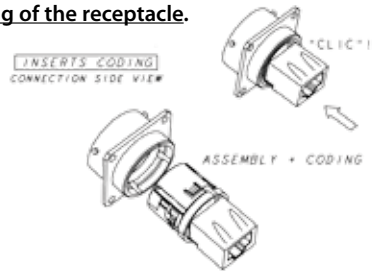

IMPORTANT NOTE: to remove the insert, use the

- **Insert removal tool for receptacle and plug**

P/N: **RJF ODE**

Accessories

- **Metallic Caps**

	RJFTVC	2	G
Connector type **6**: plug **2**: square flange receptacle **7**: jam nut receptacle			
Shell material & finish **N**: aluminium shell - nickel plating - *ROHS compliant* **G**: aluminium shell - olive drab cadmium plating **BZ**: marine bronze shell - *ROHS compliant* **ZC**: aluminium shell - green zinc cobalt plating - *ROHS compliant* **ZN**: aluminium shell - black zinc nickel plating - *ROHS compliant*			

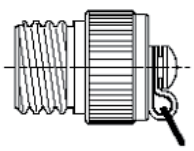

Plug Cap

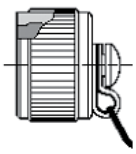

Receptacle Cap

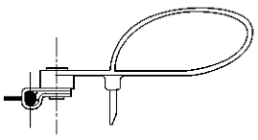

Plug Cap end

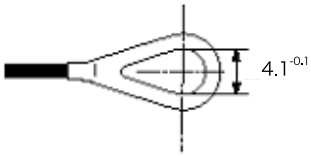

Square flange receptacle cap end

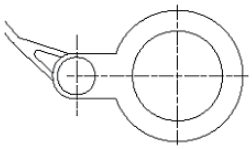

Jam Nut receptacle cap end

- **Panel gasket for square flange receptacle**
  Thickness: 0,8 mm [.031]):
  P/n: JE19

RJFTV

Self Closing Cap (SCC series)

This Self Closing cap automatically protects the RJF TV square flange receptacle (MIL-DTL-38999 type), protecting your system from dust and water projection. A spring automatically closes the upper part of the cap when the RJF TV plug is removed from the receptacle.

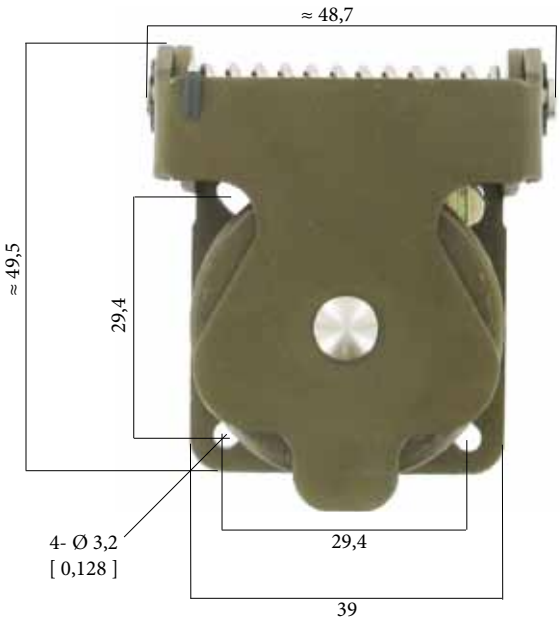

IMPORTANT NOTE
Metal Self Closing cap are sold separately (without receptacle).

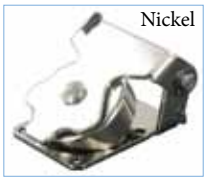

	Plating	Part number
Part number	Black coating - *ROHS compliant*	**RJF TV SCC B**
	Nickel - *ROHS compliant*	**RJF TV SCC N**
	Olive drab cadmium	**RJFTV SCC G**

Remark: compatible with RJFTV square flange receptacle type RJFTV**2**xxx only *(see page 26)*.

RJF TV

Receptacles & plugs with 360° EMI backshells

RJFTV series receptacles and plugs with EMI backshells provide a solution with 360° shielding: same protection than the one proposed by standard MIL-DTL-38999 series III connectors. With those solutions we recommend using our reinforced and double shielded Cat5E, Cat6, or Ca6A cable.
► *see pages 41-42-43*

Square flange receptacle - *Straight backshell*

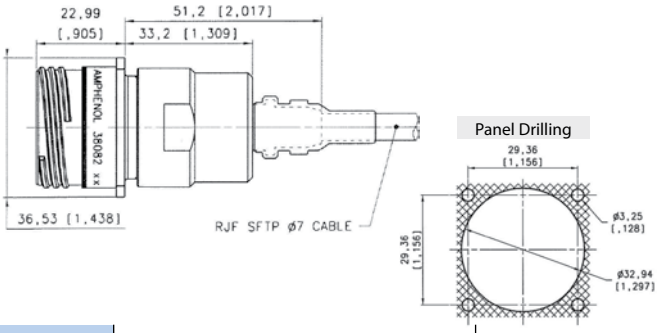

Part number	Plating	P/N
	Nickel - *ROHS compliant*	**Kit38082NI**
	Olive drab cadmium	**Kit38082**
	Green zinc cobalt - *ROHS compliant*	**Kit38082ZC**
	Black zinc cobalt - *ROHS compliant*	**Kit38082ZN**

Square flange receptacle - *Right angle backshell*

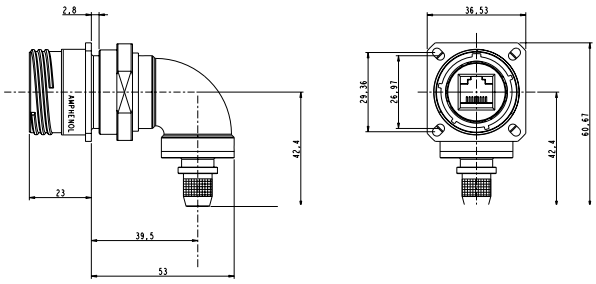

Part number	Plating	P/N
	Nickel - *ROHS compliant*	**Kit40791NI**
	Olive drab cadmium	**Kit40791**
	Green zinc cobalt - *ROHS compliant*	**Kit40791ZC**
	Black zinc cobalt - *ROHS compliant*	**Kit40791ZN**

Kit38082 and Kit40791 include:

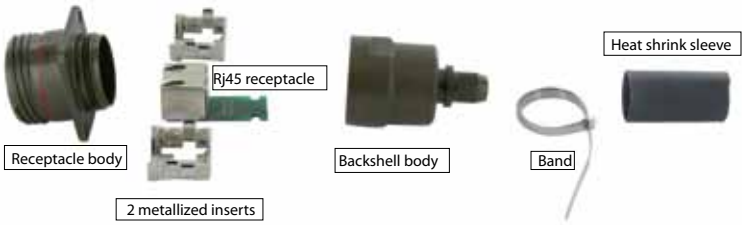

- **Panel gasket for square flange receptacle (thickness: 0,8 mm [.031])**

P/n: JE19

Jam nut receptacle - *Straight backshell*

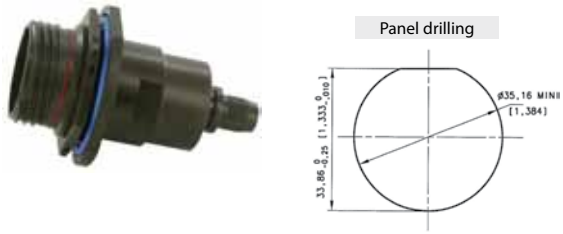

Part number	Plating	P/N
	Nickel - *ROHS compliant*	**Kit38204NI**
	Olive drab cadmium	**Kit38204**
	Green zinc cobalt - *ROHS compliant*	**Kit38204ZC**
	Black zinc cobalt - *ROHS compliant*	**Kit38204ZN**

Jam nut receptacle - *Right angle backshell*

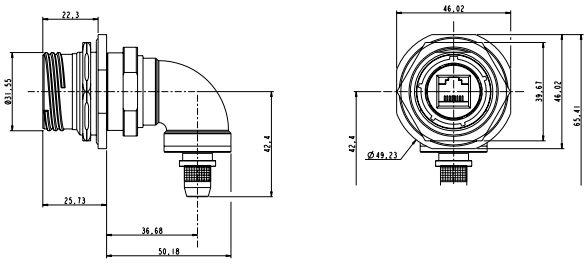

Part number	Plating	P/N
	Nickel - *ROHS compliant*	**Kit40771NI**
	Olive drab cadmium	**Kit40771**
	Green zinc cobalt - *ROHS compliant*	**Kit40771ZC**
	Black zinc cobalt - *ROHS compliant*	**Kit40771ZN**

Kit38204 and Kit40771 include:

IMPORTANT NOTE

With these receptacles, you will have to solder your own cable on the PCB.
So the wire positions have to be defined according to your network.

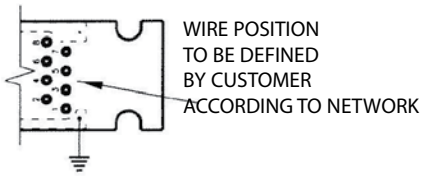

Plug - *Straight backshell*

Part number	Plating	P/N
	Nickel - *ROHS compliant*	**Kit38081NI**
	Olive drab cadmium	**Kit38081**
	Green zinc cobalt - *ROHS compliant*	**Kit38081ZC**
	Black zinc cobalt - *ROHS compliant*	**Kit38081ZN**

Plug - *Right angle backshell*

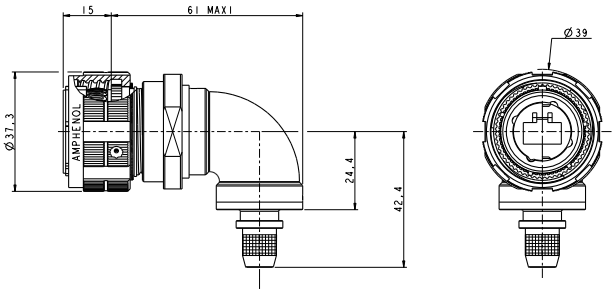

Part number	Plating	P/N
	Nickel - *ROHS compliant*	**Kit40792NI**
	Olive drab cadmium	**Kit40792**
	Green zinc cobalt - *ROHS compliant*	**Kit40792ZC**
	Black zinc cobalt - *ROHS compliant*	**Kit40792ZN**

Kit38081 and Kit40792 include:

IMPORTANT NOTE

With these plugs, the standard RJ45 plug is not provided.
Customer will have to crimp a standard RJ45 on the cable by himself.

Remark: we advise using our double shielded, reinforced Cat5E, Cat6, or Cat6A cables (see pages 41-42-43) with these RJFTV series EMI connectors.
If customer wants to use his own cable, please check with us regarding compatibility with our backshells: **contact@rjfield.com**.
We also provide assembled cordsets ***(see examples below)***.
For this type of solution please provide the configuration needed: length, description of second end…

Example of assembled cordset:

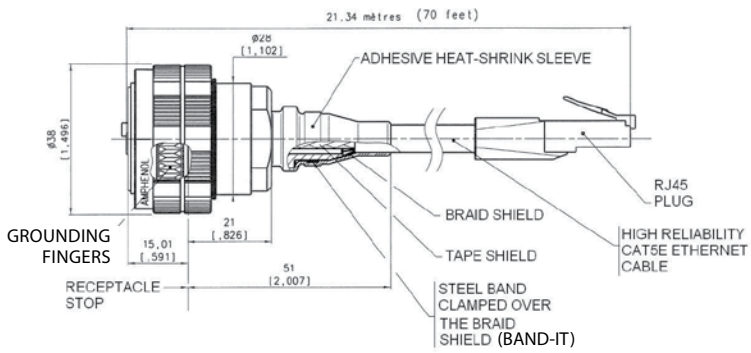

Amphenol

RJF TV

Through bulkhead receptacles

Our RJFTV through bulkhead receptacles can be connected on each side with rugged RJFTV plugs.
This system allows mechanical protection and a sealing (IP68 when mated) inside and outside the equipement, and keeps the flexibility offered by panel mount and plug connectors.
They can be connected with RJFTV series plugs.

Square flange receptacle

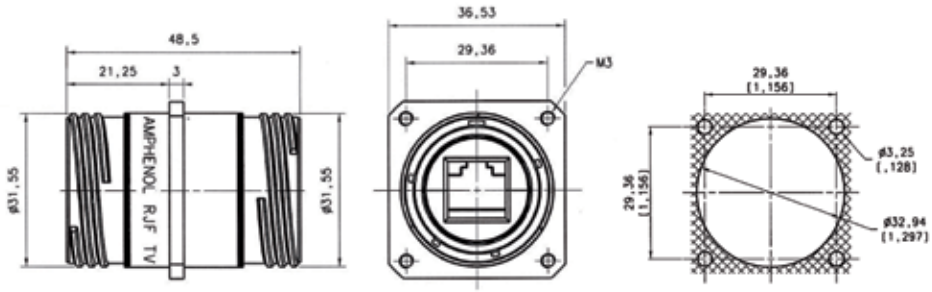

	Plating	Metallized insert	For coding A
Part number	Nickel - *ROHS compliant*	No	**RJF TV B 2 N ISO BRUT ***
	Nickel - *ROHS compliant*	Yes	**RJF TV B 2 N ISO NI ***
	Olive drab cadmium	No	**RJF TV B 2 G ISO BRUT ***
	Olive drab cadmium	Yes	**RJF TV B 2 G ISO NI ***

*** ISO BRUT = non conductive insert**
ISO NI = conductive insert

IMPORTANT NOTE
Possibility of other codings - Please consult us

Jam nut receptacle

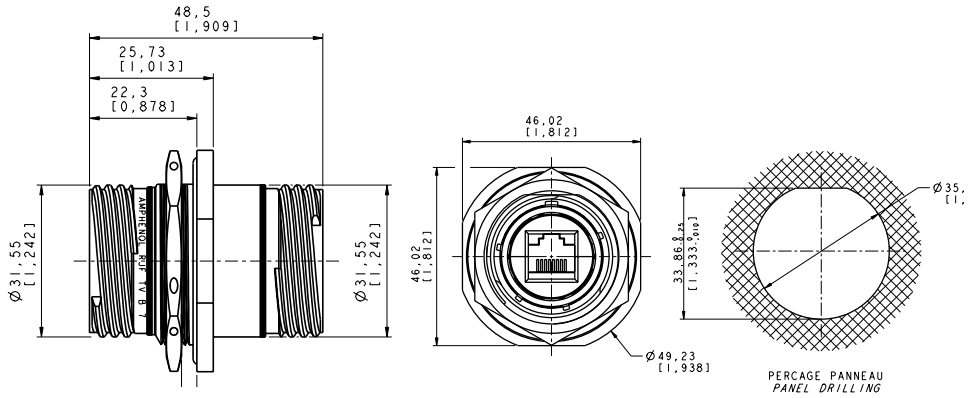

	Plating	Metallized insert	Part number
Part number	Nickel - *ROHS compliant*	No	**RJF TV B 7 N ISO BRUT ***
	Nickel - *ROHS compliant*	Yes	**RJF TV B 7 N ISO NI ***
	Olive drab cadmium	No	**RJF TV B 7 G ISO BRUT ***
	Olive drab cadmium	Yes	**RJF TV B 7 G ISO NI ***

*** ISO BRUT = non conductive insert**
ISO NI = conductive insert

RJF TV

Stand off receptacles

These receptacles can be sold directly to your PCB.
A compound insures a transversal sealing and good performance in high-vibration environments.
The shell of those receptacles are in the "Stand Off" style.
They can be connected with RJFTV series plugs.

Square flange receptacle

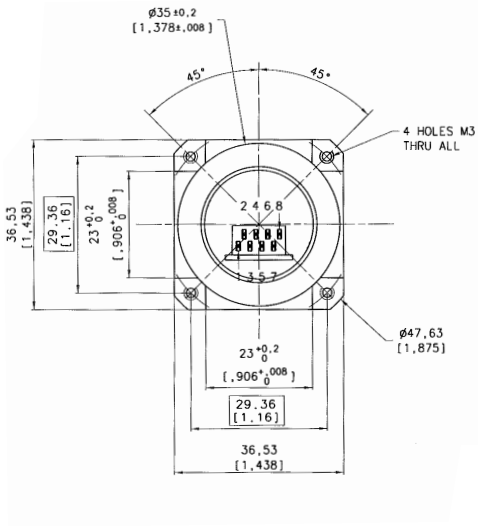

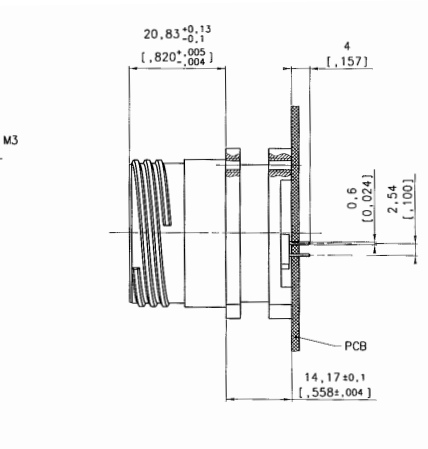

Part number *	Plating available	Part number
	Nickel - *ROHS compliant*	**RJF TV 2S X 5N F459**
	Olive drab cadmium	**RJF TV 2S X 5G F459**

** new p/n - before it was RJFTV25GF459 or RJFTV25NF459*

X to be replaced by the letter of the coding position you need (A, B, C, or D)

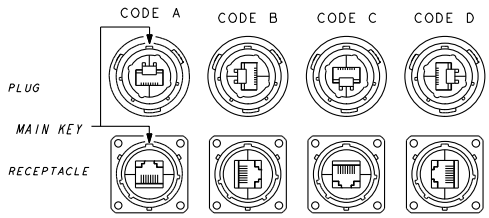

PCB LAYOUT

Solder face view

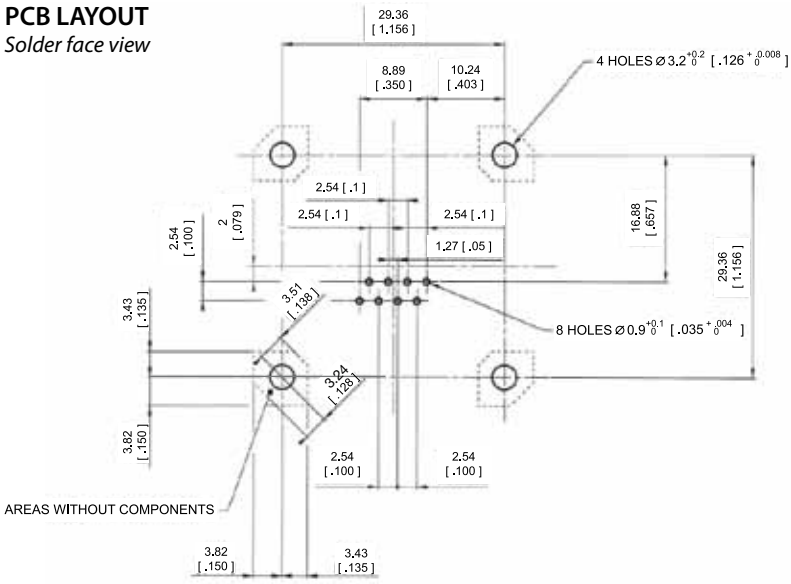

Panel drilling

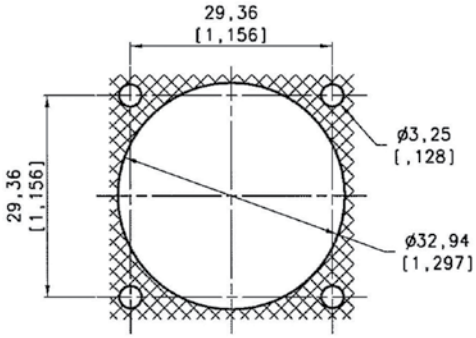

Amphenol

NEW

Now available with same distance between flange and PCB than the 38999 stand off one.
So you can use a 38999 stand off and a RJ45 stand off in the same implementation.

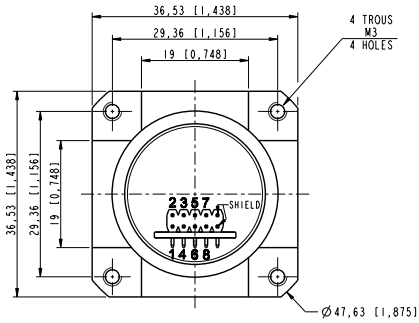

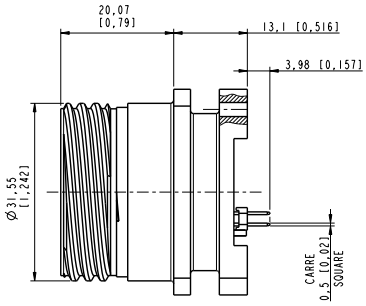

Part number: 36542
Plating: olive drab cadmium

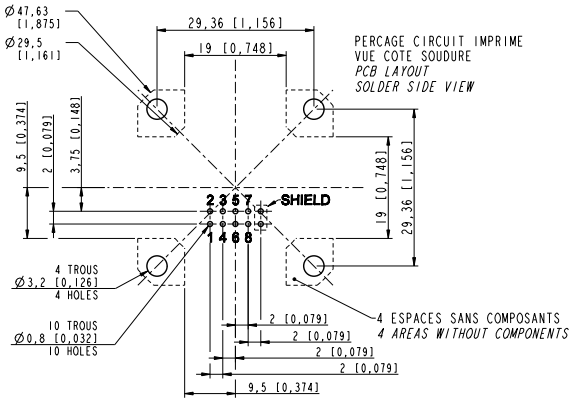

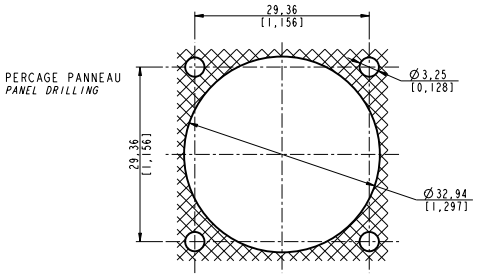

Jam nut receptacle

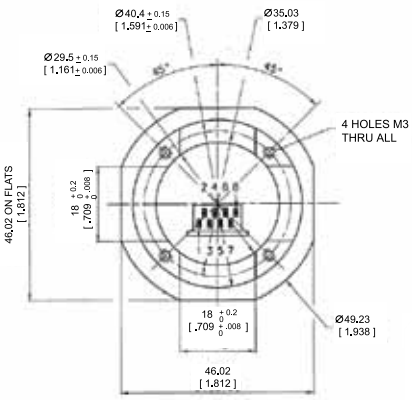

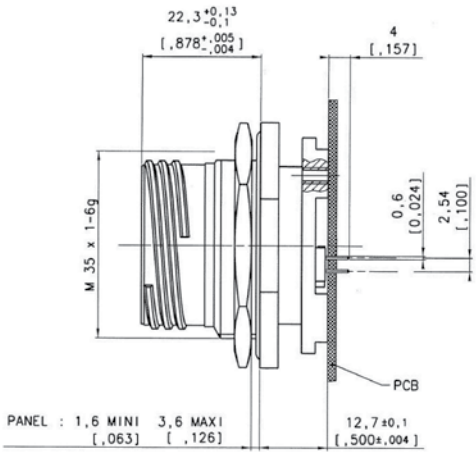

Part number	Plating	Part number
	Nickel - *ROHS compliant*	**RJF TV 7S X 5N F459**
	Olive drab cadmium	**RJF TV 7S X 5G F459**

X to be replaced by the letter of the coding position you need (A, B, C, or D)

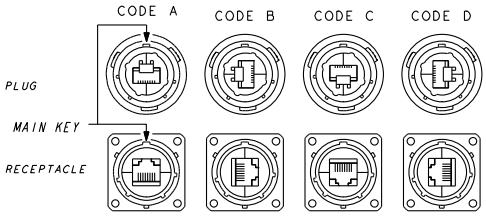

PCB LAYOUT

Solder side view

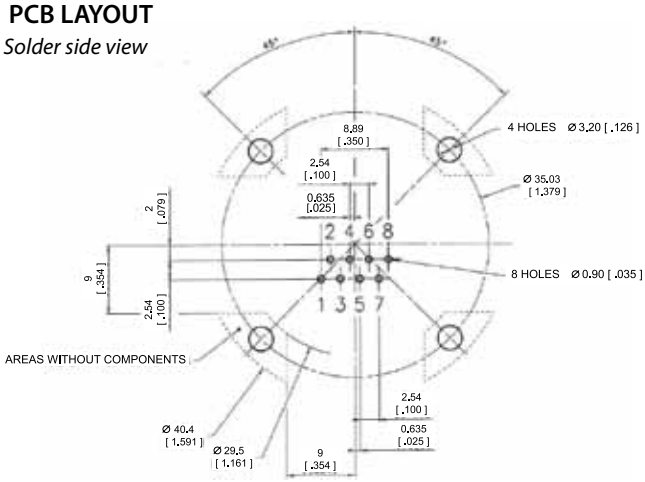

Panel Drilling

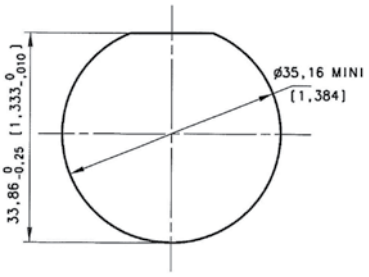

NEW

Now available with same distance between flange and PCB than the 38999 stand off one. So you can use a 38999 stand off and a RJ45 stand off in the same implementation.

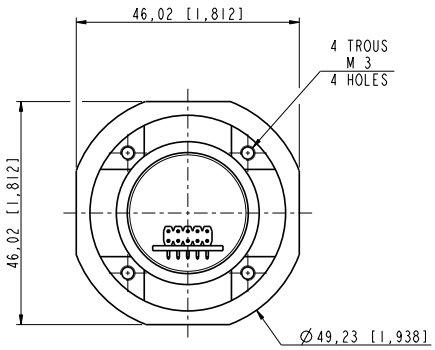

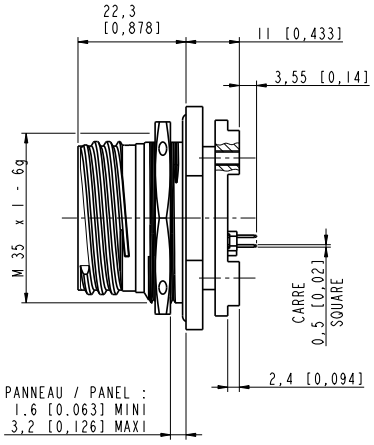

Part number: 36540

Jam nut receptacle, olive drab cadmium plating.

PCB LAYOUT

Solder side view

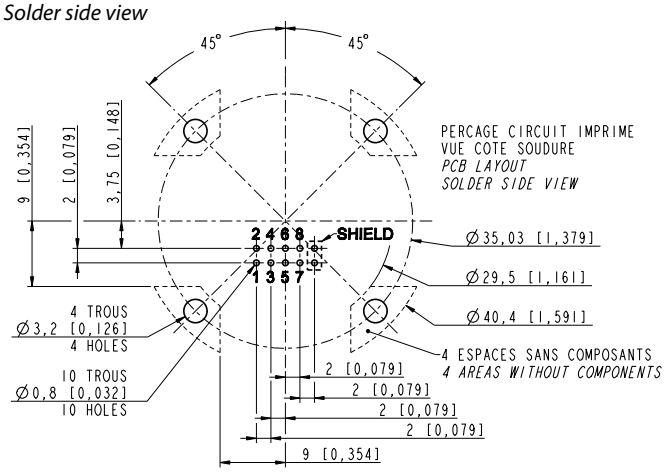

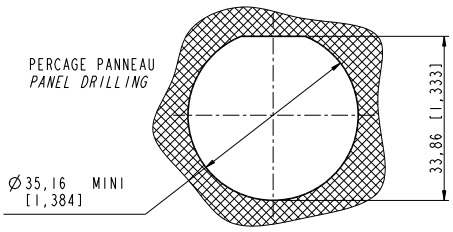

Amphenol

ROHS COMPLIANT
N, B & BZ

RJF TV

Environmentaly sealed receptacles, transversally sealed receptacles

In some applications, a transversal sealing for the receptacle is a « must ». This will prevent fluids and dust from going through the receptacle when plug or cap are not mated to the receptacle.
The sealed solution (version "S") has a compound at the rear of the receptacle as shown on the examples below. This feature is available both in RJF and RJF TV shells (please consult the relevant data sheet for product details and accessories).
In addition, the Sealed RJF TV has been successfully tested in very high vibration corresponding to airplane applications.

Applications

- Outdoor equipment
- Airplanes equipment
- Tactical radios
- Shelters
- Rugged computers
- Data acquisition and transmission in harsh environments

Data transmission

10 BaseT, 100 BaseTX and 1000 BaseT networks
Cat 5e per TIA/EIA 568B and ClassD per ISO/IEC 11801

Main characteristics

- Same as the RJF and RJF TV series.
- A complete IP68 sealing of the receptacle (even with no plug or no protective cap mated) is added.
- Outside dimensions are the same as the standard RJF and RJF TV series.
- Vibrations: the compounded versions of the RJF TV have been tested in vibration following the NAS 1599 Aeronautic specification (Ambient temperature):
  5 - 3000 Hz, 20g, 2,5 mm [.1 inch] double amplitude, 3 axes, 12 hours
  Note: this specification exceeds MIL-C-26500 requirements.

IMPORTANT NOTE

Due to the compound, the coding of the connector must be done in the factory : use the codes A, B, C or D in the part number: **see below**.

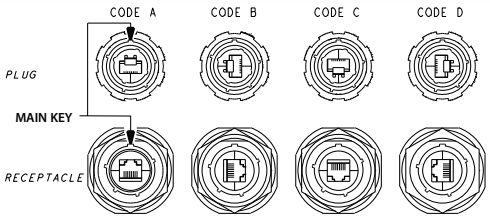

Example :
RJFTV 2S **A**2 G 15 100BTX

Part number code

Series **RJFTV:** MIL-DTL-38999 Series III	**RJF TV**	**7S**	**A**	**2**	**G**	**03 100BTX**
Shell type **2S:** sealed square flange receptacle **7S:** sealed jam nut receptacle						
Coding **A,B,C,D**						
Back terminations *(for receptacles only)* **1:** female RJ45 **1RA:** right angle female RJ45 **2:** RJ45 Cordset						
Shell material & finish **N:** aluminium shell - nickel plating - *ROHS compliant* **G:** aluminium shell - olive drab cadmium plating **BZ:** marine bronze shell - *ROHS compliant* ***Nota**: receptacle inserts are metallized*						
Cordset length *(For Receptacles with "2" Back Termination only) - Other lengths are available on demand* **03 100 BTX:** 0.3m [11.81 inches] **05 100 BTX:** 0.5m [19.68 inches] **10 100 BTX:** 1m [39.37 inches] **15 100 BTX:** 1.5m [59.05 inches] **OPEN**: open cable - with no plug at the end						

Remark: cabling configuration: 100 BTX = 568B (Ethernet specification)

Examples:
- *series III, sealed jam nut receptacle, A coding, with female RJ45 back termination, olive drab cadmium plating:* ***RJF TV 7SA 1 G***
- *series III, sealed square flange receptacle, A coding, with female RJ45 back termination, nickel plating:* ***RJF TV 2SA 1 N***
- *series III, sealed jam nut receptacle, A coding, 1.5m [59.05"] 100 BTX cordset, olive drab cadmium plating:* ***RJF TV 7SA 2 G15 100BTX***

RJF TV

Hermetic receptacles

ROHS COMPLIANT
N, B & BZ

In some applications, a transversal hermiticity for the receptacle is a « must ». This will prevent gas from going through the receptacle when plug or cap are not mated to the receptacle.
The hermetic solution (version "H") has a compound at the rear of the receptacle as shown on the examples below.
This feature is available both in RJF and RJF TV shells (please consult the relevant data sheet for product details and accessories).
Helium leakage is less than 1.10^{-6} cm^3 per second [0.1 micron cubic ft per hour] at one bar [15 psi] pressure differential.

Applications

- Outdoor equipment
- Airplanes equipment
- Tactical radios
- Shelters
- Rugged computers
- Data acquisition and transmission in harsh environments

Data Transmission

10 BaseT, 100 BaseTX and 1000 BaseT networks
Cat 5e per TIA/EIA 568B and ClassD per ISO/IEC 11801

Main characteristics

- Same as the RJF and RJF TV series.
- A complete IP68 sealing of the receptacle (even with no plug or no protective cap mated) is added.
- Outside dimensions are the same as the standard RJF and RJF TV series.
- Vibrations: the compounded versions of the RJF TV have been tested in vibration following the NAS 1599 Aeronautic specification (Ambient temperature):
  5 - 3000 Hz, 20g, 2,5 mm [.1 inch] double amplitude, 3 axes, 12 hours
  Note: this specification exceeds MIL-C-26500 requirements.

IMPORTANT NOTE

Due to the compound, the coding of the connector must be done in the factory: use the codes A, B, C or D in the part number: **see below**.

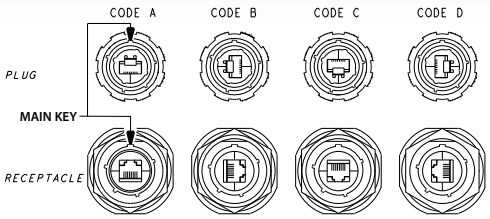

Example :
RJFTV 2H **A**2 N 15 100BTX

Part number code

Series **RJFTV:** MIL-DTL-38999 series III	**RJF TV**	**7H**	**A**	**2**	**G**	**03 100BTX**
Shell type **2H:** transversally sealed and hermetic square flange receptacle **7H:** transversally sealed and hermetic jam nut receptacle						
Coding **A,B,C,D**						
Back terminations *(for receptacles only)* **1:** female RJ45 **1RA:** right angle female RJ45 **2:** RJ45 Cordset						
Shell material & finish **N:** aluminium shell - nickel plating - *ROHS compliant* **G:** aluminium shell - olive drab cadmium plating **BZ:** marine bronze shell - *ROHS compliant* ***Nota**: receptacle inserts are metallized*						
Cordset length *(for receptacles with "2" back termination only) - Other lengths are available on demand* **03 100 BTX:** 0.3m [11.81 inches] **05 100 BTX:** 0.5m [19.68 inches] **10 100 BTX:** 1m [39.37 inches] **15 100 BTX:** 1.5m [59.05 inches] **OPEN**: open cable - with no plug at the end						

Remark: cabling configuration: 100 BTX = 568B (Ethernet specification)

Examples:
- *Series III, sealed jam nut receptacle, A coding, with female RJ45 Back termination, olive drab cadmium plating:* ***RJF TV 7HA 1 G***
- *Series III, sealed square flange receptacle, A coding, with female RJ45 back termination, nickel plating:* ***RJF TV 2HA 1 N***
- *Series III, sealed jam nut receptacle, A coding, 1.5m [59.05"] 100 BTX cordset, olive drab cadmium plating :* ***RJF TV 7HA 2 G15 100BTX***

Amphenol

RJF TV

For big insulation wire up to 1.6 mm

NEW

Special RJF TV plug dedicated to Ethernet cable with insulation wire from 1,1 to 1,6 mm.

Remark:
- compatible with any RJF TV receptacle
- for cables which are not compatible with standard RJ45 plug

Applications
- Robotics
- Industrial process control
- CNC machines
- Special machines
- Oil & Gas
- Motion control
- Data acquisition and transmission in harsh environment
- Tele-maintenance

Data transmission
10 BaseT, 100 BaseTX and 1000 BaseT networks
Cat 5e per TIA/EIA 568B and ClassD per ISO/IEC 11801

Main characteristics
- Sealed against fluids and dusts (IP68)
- Shock, vibration and traction resistant
- No cabling operation in field and no tools required
- Mechanical coding / Polarization (4 positions)
- Improved EMI protection
- **Tri Start Thread coupling mechanism (MIL-DTL-38999 series III type) with anti-decoupling device - Shell size 19**
- **Robust metallic shells**
- RJ45 cordset retention in the plug: 100 N in the axis
- Mating cycles: 500 min
- Compatible with cable diameter from 6 mm [0.236 in] to 13 mm [0.512 in], for smaller diameters please consult us

Environmental protection
- Sealing: IP68
- Salt spray: 48 h with nickel plating
  > 96 h with black coating
  > 500 h with olive drab cadmium
- Fire retardant/Low smoke: UL94 V0 and NF F 16 101 & 16 102
- Vibrations: 10 – 500 Hz, 10 g, 3 axes: no discontinuity > 10 nano s.
- Shocks: IK06 ▸weight of 250 g drop from 40 cm [15.75 in] onto connectors (mated pair)
- Humidity: 21 days, 43°C, 98% humidity
- Thermal shock: 5 cycles at - 40°C / +100°C
- Temperature range: - 40°C / +85°C

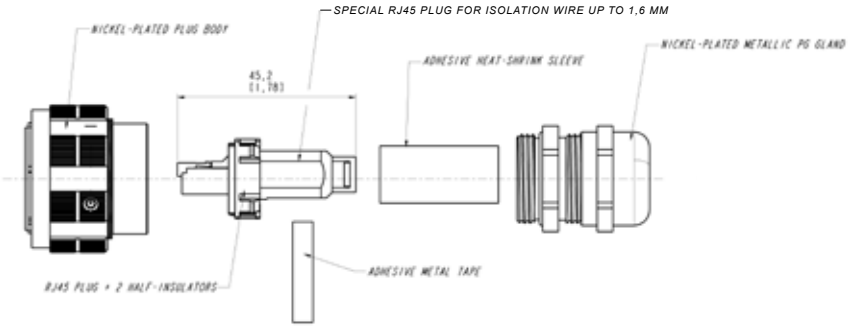

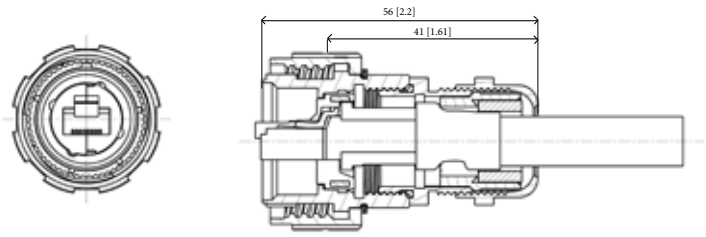

Part number	Plating	P/N
	Nickel - *ROHS compliant*	**35660**
	Olive drab cadmium	**35660G**

RJ45/M12 adaptor

NEW

RJ45/M12 adaptors allow to give an access point with RJ45 on M12 D coded based networks.
Especially used in Railway applications.

Part number : 35655
Nickel plating.

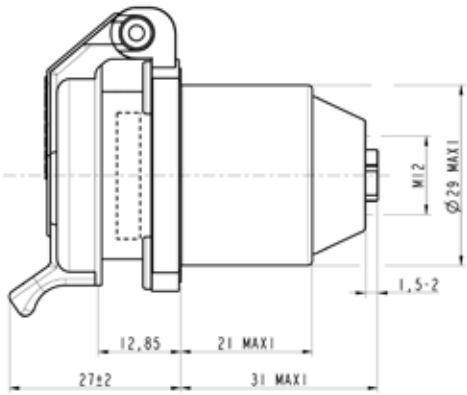

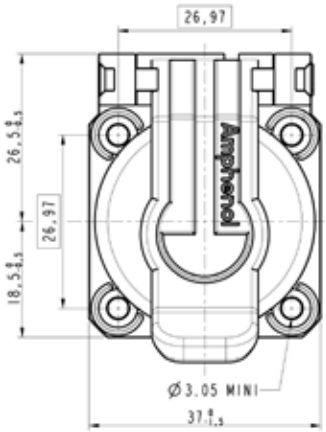

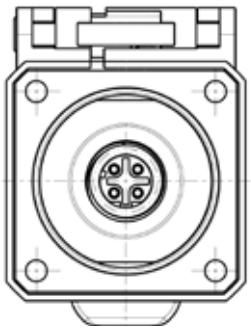

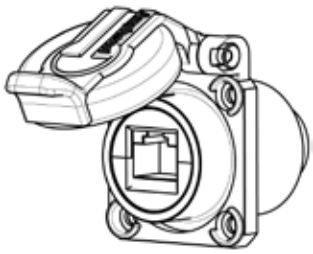

M12-D	RJ45 contact position
1	1
2	3
3	2
4	6

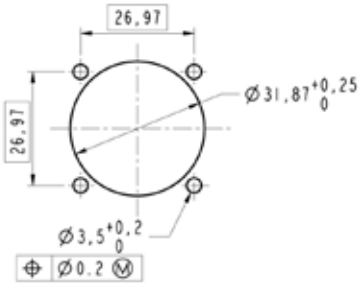

Amphenol

Special RJ45 adaptor

NEW

For Military & Commercial Aeronautics

At the rear of the adaptor, the connection is for connectors type EN3646.

Adaptor RJ45 only

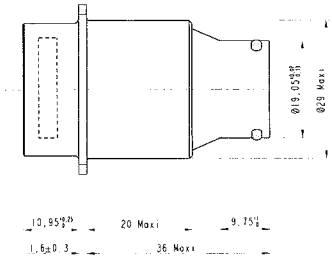

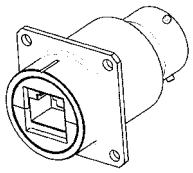

Part number		Coding
	35629	N
	35632	Y

Adaptor RJ45 + Self Closing Cap

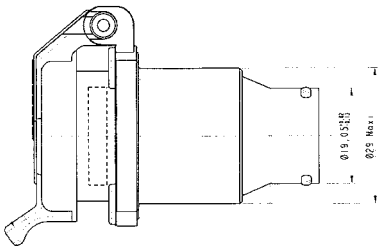

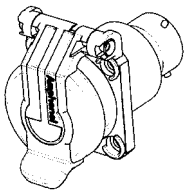

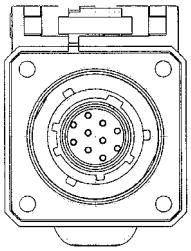

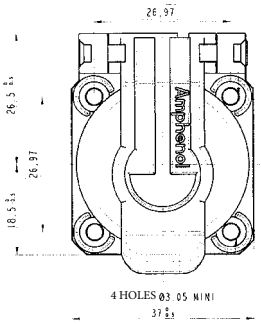

Part number		Coding
	35630	N
	35631	Y

For all options:

Panel Drilling

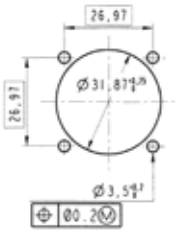

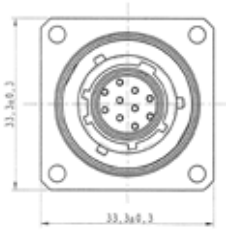

12-10 Male contact EN3155

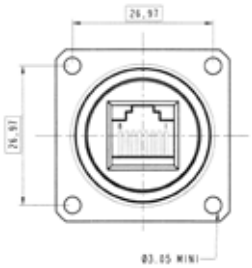

Coding N

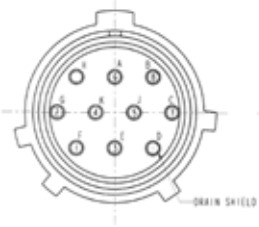

Coding Y

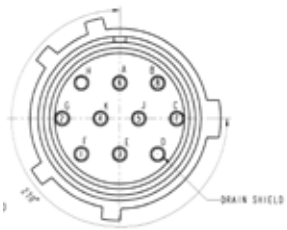

CAT 5E CABLE

High reliability Cat 5e Ethernet cable & cordsets

General construction

A 4 pair, 24 AWG, 100 Ohm SFTP round patch cable, designed to the ISO / IEC 11801 Category 5e requirements (cat 5e on 76m). The cable contains 4 twisted pairs, cabled, double shielded with kevlar reinforcement strands, jacketed in black UV resistant Polyurethane HFFR. Designed for fixed or portable applications in harsh environments.

HFFR: Halogen Free Flame Retardant

Jacket compound specification:

- Halogen free flame retardant polyether-based polyurethane
- Excellent hydrolysis resistance
- High microbial resistance
- Glossy finish
- UV resistant
- High flexibility

Applications

- Robotics
- Motion control
- Railways
- CNC machines
- Battelfield communication
- Industrial process control

Datas for the cable alone only (without RJ45 plug)

Physical characteristics

CONDUCTORS	24 AWG (0,25 mm²) tinned copper, 7x0.20 mm
INSULATION	Color coded 568-B, linear low Density Polyethylene, Nom. Dia. 0,039" (1mm)
ASSEMBLY	Pairs cabled with Kevlar strength members and separation tape wrapped
SHIELDS	Inner: aluminium mylar 100% coverage Outer: tinned copper braid 80% coverage
JACKET	Black, special PUR compound
WEIGHT	40 lbs / mft (59 kg/km)
OUTSIDE DIAM.	0.28" (7.1 mm) nom.
MIN BEND RADIUS *(During installation)*	67.5mm (9x O. D.)
MIN BEND RADIUS *(During operation)*	37.5mm (5 x O.D.)
MIN FLEXES TO FAILURE	Passes IEC 61156-6 requirements
TEMPERATURE	Plus 85°C, minus 40°C

Cordsets with a RJ45 plug overmolded on each end

Length (m/ft)	Part number
0,76 m / 2,5 ft	RJF SFTP 5E 0076
1,00 m / 3.28 ft	RJF SFTP 5E 0100
1,52 m / 5 ft	RJF SFTP 5E 0152
3,05 m / 10 ft	RJF SFTP 5E 0305
4,57 m / 15 ft	RJF SFTP 5E 0457
5,00 m / 16.4 ft	RJF SFTP 5E 0500
6,00 m / 19.68 ft	RJF SFTP 5E 0600
6,24 m / 20.46 ft	RJF SFTP 5E 0624
7,62 m / 25 ft	RJF SFTP 5E 0762
8,00 m / 26.24 ft	RJF SFTP 5E 0800
10,00 m / 32.78 ft	RJF SFTP 5E 1000
14,00 m / 45.92 ft	RJF SFTP 5E 1400
15,25 m / 50 ft	RJF SFTP 5E 1525
22,87 m / 75 ft	RJF SFTP 5E 2287
30,5 m / 100 ft	RJF SFTP 5E 3050
45,75 m / 150 ft	RJF SFTP 5E 4575
50,00 m / 164 ft	RJF SFTP 5E 5000
61,00 m / 200.08 ft	RJF SFTP 5E 6100

Electrical characteristics *(at 20°C - 68°F)*

DC Resistance	96 Ohms/Km
Impedance *(1-100 MHz)*	100 +/- 15 Ohms

Frequency	Attenuation *(dB/100m)*	N.E.X.T. *(Near-End Crosstalk Loss)*
772 KHz	2.70 dB	64 dB min.
1 MHz	3.15 dB	62 dB min.
4 MHz	6.45 dB	53 dB min.
10 MHz	9.90 dB	47 dB min.
16 MHz	12.3 dB	44 dB min.
20 MHz	13.8 dB	42 dB min.
31.25 MHz	17.7 dB	40 dB min.
62.5 MHz	25.6 dB	35 dB min.
100 MHz	33 dB	32 dB min.

Capacitance (1 kHz)	46nF/km nom.
LCL	43 dB min. @ 64 KHz
Capacitance unbalance	3.4 pF/m max. @ 1KHz (wire to ground)
Insulation resistance	150 M Ohm min.
Voltage rating	230 VMS
Dielectric strength	VAC/1 min - 700 V/Min
Propagation delay (100 MHz)	5.2 ns/m max.
Delay skew	20 ns/100m max. @ 1-100 MHz
Resistance unbalance	3% max.
Structural return loss (1-20 MHz)	23db/100m min.
Spark test (tested during production)	3 KV
Velocity of propagation	67% nom.

Reel of cable *(without RJ45 plug on ends)*

Length (m / ft)	Part number
100 m / ~328 ft	190-038045-00
300 m / ~984 ft	190-038045-01

CAT 6 CABLE

High reliability Cat 6 Ethernet cable & cordsets

NEW

ROHS COMPLIANT

General construction

A 4 pairs, 26 AWG, 100 Ohm SFTP round patch cable, designed to the ISO / IEC 11801 Category 6 requirements. The cable contains 4 twisted pairs individually shielded, cabled, double shielded with kevlar reinforcement strands, jacketed in black UV resistant Polyurethane HFFR. Designed for fixed or portable applications in harsh environments.

HFFR: Halogen Free Flame Retardant

Jacket compound specification:

- Halogen free flame retardant polyether-based polyurethane
- Excellent hydrolysis resistance
- High microbial resistance
- Glossy finish
- UV resistant
- High flexibility

Applications

- Robotics
- Motion control
- Railways
- CNC machines
- Battlefield communication
- Industrial process control

Electrical characteristics *(at 20°C - 68°F)*

DC Resistance	290 Ohm/Km
Impedance *(100 MHz)*	100 +/- 5 Ohm

Frequency	Attenuation *(dB/100m)*	N.E.X.T. *(Near-End Crosstalk Loss)*
1 MHz	3.1 dB	75.3 dB min.
4 MHz	5.8 dB	66.3 dB min.
8 MHz	8.0 dB	61.8 dB min.
10 MHz	9.0 dB	60.3 dB min.
16 MHz	11.4 dB	57.2 dB min.
20 MHz	12.8 dB	55.8 dB min.
25 MHz	14.1 dB	54.3 dB min.
31.25 MHz	16.1 dB	52.8 dB min.
62.5 MHz	23.2 dB	48.4 dB min.
100 MHz	29.9 dB	45.3 dB min.
200 MHz	43.7 dB	40.8 dB min.
250 MHz	49.7 dB	39.3 dB min.

Capacitance (1 kHz)	50nF/km nom.
Capacitance unbalance	1600 pF/km max.
Insulation resistance	5 GOhm/km
Voltage rating (peak)	230 V
Dielectric strength	VAC/1 min - 700 V/Min
Propagation delay	4.6 ns/m
Skew	45 ns/100m
Resistance unbalance	2%
Return loss (250 MHz)	15.6dB
Velocity of propagation	72% nom.

Reel of cable *(without RJ45 plug on ends)*

Length (m / ft)	Part number
100 m / ~328 ft	191-031179-00
300 m / ~984 ft	191-031179-01

Physical characteristics

Datas for the cable alone only (without RJ45 plug)

Conductors	26 AWG (0,14 mm^2) tinned copper
Insulation	Polyethylene Nom. Dia. 0,039" (1mm)
Assembly	Pairs cabled with Kevlar strength members and separation tape wrapped
Shields	Inner: aluminium mylar 100% coverage Outer: tinned copper braid 80% coverage
Jacket	Black, special PUR compound
Weight	36.9 lbs / mft (55 kg/km)
Outside diam.	0.272" (6.9 mm) nom.
Min bend radius *(During installation)*	72mm (10x O. D.)
MIn bend radius *(During operation)*	36mm (5 x O.D.)
Min flexes to failure	Passes IEC 61156-6 requirements
Temperature	-40°C *(-40°F)* / + 85°C *(185°F)*

Cordsets with a RJ45 plug overmolded on each end

Length (m/ft)	Part number
0,75 m / *2,46 ft*	RJF SFTP 6 0075
1,00 m / *3,28 ft*	RJF SFTP 6 0100
1,50 m / *4,92 ft*	RJF SFTP 6 0150
2,00 m / *6,56 ft*	RJF SFTP 6 0200
2,50 m / *8,20 ft*	RJF SFTP 6 0250
3,00 m / *9,84 ft*	RJF SFTP 6 0300
3,50 m / *11,48 ft*	RJF SFTP 6 0350
4,00 m / *13,12 ft*	RJF SFTP 6 0400
4,50 m / *14,76 ft*	RJF SFTP 6 0450
5,00 m / *16,40 ft*	RJF SFTP 6 0500
6,00 m / *19,68 ft*	RJF SFTP 6 0600
7,00 m / *22,96ft*	RJF SFTP 6 0700
8,00 m / *26,24 ft*	RJF SFTP 6 0800
9,00 m / *29,52 ft*	RJF SFTP 6 0900
10,00 m / *32,80 ft*	RJF SFTP 6 1000
15,00 m / *49,20 ft*	RJF SFTP 6 1500
20,00 m / *65,60 ft*	RJF SFTP 6 2000
25,00 m / *82,00 ft*	RJF SFTP 6 2500
30,00 m / *98,40 ft*	RJF SFTP 6 3000
35,00 m / *114,80 ft*	RJF SFTP 6 3500
40,00 m / *131,20 ft*	RJF SFTP 6 4000
45,00 m / *147,60 ft*	RJF SFTP 6 4500
50,00 m / *164,00 ft*	RJF SFTP 6 5000
60,00 m / *196,80 ft*	RJF SFTP 6 6000

CAT 6A CABLE

High reliability Cat 6A Ethernet cable & cordsets

NEW

ROHS COMPLIANT

General construction

A 4 pairs, 26 AWG, 100 Ohm SFTP round patch cable, designed to the ISO / IEC 11801 Category 6A requirements. The cable contains 4 twisted pairs individually shielded, cabled, double shielded with kevlar reinforcement strands, jacketed in black UV resistant Polyurethane HFFR. Designed for fixed or portable applications in harsh environments.

HFFR: Halogen Free Flame Retardant

Jacket compound specification:

- Halogen free flame retardant polyether-based polyurethane
- Excellent hydrolysis resistance
- High microbial resistance
- Glossy finish
- UV resistant
- High flexibility

Applications

- Robotics
- Motion control
- Railways
- CNC machines
- Battlefield communication
- Industrial process control

Datas for the cable alone only (without RJ45 plug)

Electrical characteristics *(at 20°C - 68°F)*

DC Resistance	290 Ohm/Km
Impedance *(100 MHz)*	100 +/- 5 Ohm

Frequency	Attenuation *(dB/100m)*	N.E.X.T. *(Near-End Crosstalk Loss)*
1 MHz	3.1 dB	75.3 dB min.
4 MHz	5.7 dB	66.3 dB min.
8 MHz	8.0 dB	61.8 dB min.
10 MHz	8.9 dB	60.3 dB min.
16 MHz	11.2 dB	57.2 dB min.
20 MHz	12.6 dB	55.8 dB min.
25 MHz	14.1 dB	54.3 dB min.
31.25 MHz	15.8 dB	52.8 dB min.
62.5 MHz	22.5 dB	48.4 dB min.
100 MHz	28.7 dB	45.3 dB min.
200 MHz	41.4 dB	40.8 dB min.
250 MHz	46.6 dB	39.3 dB min.
300 MHz	51.4 dB	38.1 dB min.
400 MHz	60.1 dB	36.3 dB min.
500 MHz	67.9 dB	34.8 dB min.

Capacitance (1 kHz)	50nF/km nom.
Capacitance unbalance	1600 pF/km max.
Insulation resistance	5 GOhm/km
Voltage rating (peak)	230 V
Dielectric strength	VAC/1 min - 700 V/Min
Propagation delay	4.6 ns/m
Skew	45 ns/100m
Resistance unbalance	2%
Return loss (500 MHz)	15.6dB
Velocity of propagation	72% nom.

Reel of cable *(without RJ45 plug on ends)*

Length (m / ft)	Part number
100 m / ~328 ft	191-031190-00
300 m / ~984 ft	191-031190-01

Physical characteristics

Conductors	26 AWG (0,14 mm²) tinned copper
Insulation	Density Polyethylene, Nom. Dia. 0,039" (1mm)
Assembly	Pairs cabled with Kevlar strength members and separation tape wrapped
Shields	Inner: aluminium mylar 100% coverage Outer: tinned copper braid 80% coverage
Jacket	Black, special PUR compound
Weight	36.9 lbs / mft (55 kg/km)
Outside diam.	0.272" (6.9 mm) nom.
Min bend radius *(During installation)*	72mm (10x O. D.)
MIn bend radius *(During operation)*	36mm (5 x O.D.)
Min flexes to failure	Passes IEC 61156-6 requirements
Temperature	-40°C *(-40°F)* / + 85°C *(185°F)*

Cordsets with a RJ45 plug overmolded on each end

Length (m/ft)	Part number
0,75 m / *2,46 ft*	RJF SFTP 6A 0075
1,00 m / *3,28 ft*	RJF SFTP 6A 0100
1,50 m / *4,92 ft*	RJF SFTP 6A 0150
2,00 m / *6,56 ft*	RJF SFTP 6A 0200
2,50 m / *8,20 ft*	RJF SFTP 6A 0250
3,00 m / *9,84 ft*	RJF SFTP 6A 0300
3,50 m / *11,48 ft*	RJF SFTP 6A 0350
4,00 m / *13,12 ft*	RJF SFTP 6A 0400
4,50 m / *14,76 ft*	RJF SFTP 6A 0450
5,00 m / *16,40 ft*	RJF SFTP 6A 0500
6,00 m / *19,68 ft*	RJF SFTP 6A 0600
7,00 m / *22,96ft*	RJF SFTP 6A 0700
8,00 m / *26,24 ft*	RJF SFTP 6A 0800
9,00 m / *29,52 ft*	RJF SFTP 6A 0900
10,00 m / *32,80 ft*	RJF SFTP 6A 1000
15,00 m / *49,20 ft*	RJF SFTP 6A 1500
20,00 m / *65,60 ft*	RJF SFTP 6A 2000
25,00 m / *82,00 ft*	RJF SFTP 6A 2500
30,00 m / *98,40 ft*	RJF SFTP 6A 3000
35,00 m / *114,80 ft*	RJF SFTP 6A 3500
40,00 m / *131,20 ft*	RJF SFTP 6A 4000
45,00 m / *147,60 ft*	RJF SFTP 6A 4500
50,00 m / *164,00 ft*	RJF SFTP 6A 5000
60,00 m / *196,80 ft*	RJF SFTP 6A 6000

NOTES

Rugged Ethernet Solutions

Cable assemblies

Table of contents

NEW RJ45/M12: Ethernet Railway cable solution 46

NEW JUMPER Railway intercoach 47

RJ45/M12: Ethernet railway cable solution

Part number: **Kit 36516** - *Length 7 m [22.96 ft]*

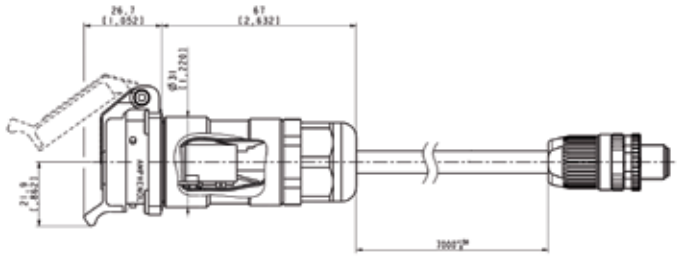

Part number: **Kit 36520** - *Length 1 m [3.28 ft]*

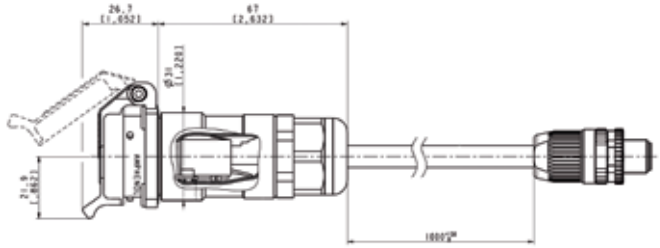

Part number: **Kit 36530** - *Length 4 m [13.12 ft]*

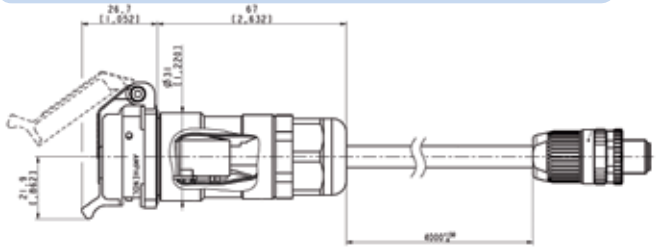

M12 D Coding

For all options:

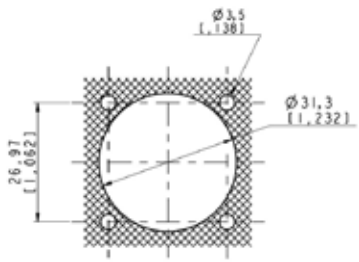

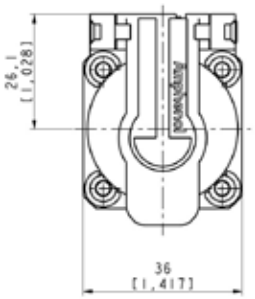

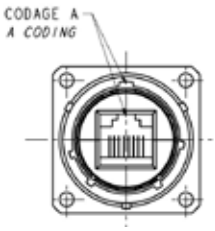

JUMPER railway intercoach

Derived from RJFTV Series

NEW

ROHS COMPLIANT N

Note: for technical characteristics, please refer to RJFTV page 26.

Kit 40426 includes:

- 2 RJF TV plugs with EMI backshell assembled (coding A)
- 1 RJF SFTP cable cat 5E high reliability
- 1 conduit PCST-17B
- 2 PMAFIX straight, PG metal thread

Part number	L^{+100}_{0}	P/N
	2465	**Kit 40426 Rep 101**
	3010	**Kit 40426 Rep 102**

For any other lenght, please consult us: contact@rjfield.com

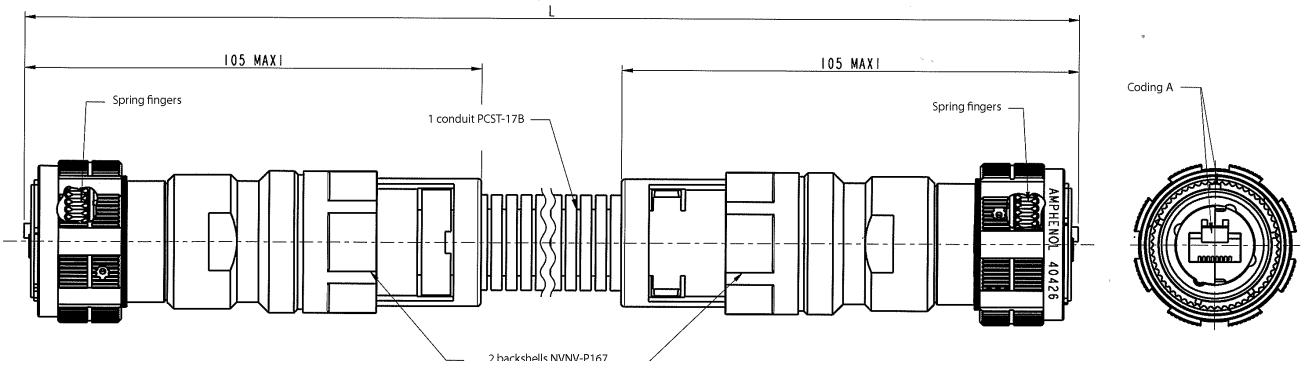

Amphenol

NOTES

Rugged Ethernet Solutions

Rugged electronics

Amphenol

Table of contents

Military Ethernet Media Converter for harsh environment, fully MIL-STD compliant

NEW

RES-GMC with Expanded Beam technology: Military Ethernet Media Converter - 2 Gigabit ports 50
RES-GMC with Butt Joint Fiber connector: Military Ethernet Media Converter - 2 or 4 Gigabit ports 52
RES-GMC-1M-FORC: Military Ethernet Media Converter with Remote Control 54

NEW

Military Ethernet Switch for harsh environment, fully MIL-STD compliant

RES-SCE-AC-8US: Unmanaged Miniature Portable Ethernet Switch - 8 Fast ports 56
RES-SCE-8MG: Managed Miniature Portable Ethernet Switch - 8 Gigabit ports 58
RESMLAC-8US-CAPS: Unmanaged Military Ethernet Switch, MIL-DTL-38999 connectors - 8 Fast ports 60
RJSMLAC-8UG-CAPS: Unmanaged Military Ethernet Switch, RJFTV connectors - 8 Gigabit ports 62
RJSMLAC-8MG-CAPS: Managed Military Ethernet Switch, RJFTV connectors - 8 Gigabit ports 64
RESMLAC-8MG-CAPS: Managed Military Ethernet Switch, MIL-DTL-38999 connectors - 8 Gigabit ports 66
RESMLAC-8MG-CAPS F35: Managed Military Ethernet Switch, MIL-DTL-38999 connectors - 8 Gigabit ports 68
RESMLAC-28MG: Managed Military Ethernet Switch - 24 Gigabit + 4 combo 10G ports 70

Military Ethernet Switch for harsh environment with industrial EMI compliancy

RJSML-8US1 and RJSML-8UG1: Unmanaged Military Ethernet Switch, Fast or Gigabit 73
RJSML-MG7F3G : Managed Military Ethernet Switch - 7 Fast ports + 3 Gigabit ports 77

Industrial Ethernet Switch for harsh environment

RJSPC: Unmanaged or Ring Industrial Ethernet Switch - 5 Fast ports 81

RES-GMC with Expanded Beam Technology Military Ethernet Media Converter

NEW

For harsh environment - Fully MIL-STD compliant

Amphenol's RES-GMC is a MIL-STD rugged, unmanaged-military-grade security gateway, offering up to 2 Gigabit security gateways per device for unidirectional and data diodes solution for total isolation between two network with different security classification. The unit supports PoE on 2 ports (IEEE802.3af and IEEE802.3at).

Developed for military and harsh environment applications, the RES-GMC features mechanical packaging enhancements designed for MIL-STD-810F airborne and ground environmental compliance and high reliability.
The unit has been especially hardened to improve ingress, impact, and shock/vibration protection, as well as eliminate all moving parts through passive cooling, and interface through sealed MIL-D-38999 circular connectors.

Leveraging best-in-class switching technology, the RES-GMC series serves as a robust solution to extend your Tactical Gigabit Ethernet network connectivity of up to 120Km over fiber. Compact in size, the RES-GMC is particularly useful for remote and space-constrained locations either on ground vehicle environments or airborne.

Military applications

- Data acquisition & transmission
- Battlefield communication C4ISR
- Rugged Networks
- Combat vehicles
- Avionic & shipboard systems

Key features

- **Ethernet ports**
  - 10/100/1000 Base TX to 100/1000 Base FX-(MM/SM) Media converter (WDM - Optional)
  - Up to 2 x 10/100/1000Base-TX and up to 2 x 100/1000 Base FX
- **Networking**
  - Full wire-speed forwarding rate
  - Option for Up to 2 ports PoE - IEEE802.3af, IEEE802.3at
  - Store-and-forward or Pass through mechanism
  - Auto MDI-II, MDI-X, FDX, HDX, Flow control
  - Auto-negotiation and fixed settings via DIP switch
  - Jumbo frame support
  - Link loss forwarding mechanism
- **Connectors**
  - MIL-D-38999 (Power & Ethernet signals)
  - Power connector type: D38999/24WA98PA
  - LAN connector type: RJFTV
  - Fiber connector type: CTOS 77 PC or TAC BEAM EB 4H 8000
  - Protective cap over each connector
- **Chassis**
  - Low profile rugged aluminium extrusion
  - Conductively cooled w/custom internal heat-sinks
  - Ingress protection against sand, dust and moisture
  - Anodize coating, MIL-A-8625, Type II, Class 2
- **Standards**
  - MIL-STD-1275, MIL-STD-704A, MIL-STD-461E,
  - MIL-STD-810F GM, IP67/68

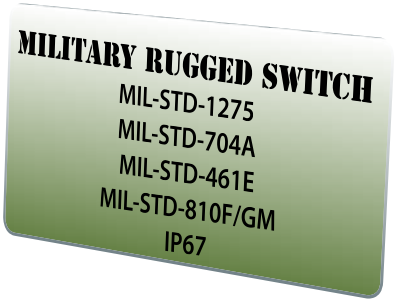

Product specifications

Performance
- 26.8 Mpps wire speed forwarding rate
- 2 Gbps maximum forwarding bandwidth
- 4K MAC address
- 2 LED indication (Speed, Link/Activity) per port
- Wire-speed reception and transmission

Standards compliance
- IEEE 802.3, 10 Mbps 10BASE-T (Ethernet)
- IEEE 802.3u, 100 BASE-TX 100 Mbps (Fast Ethernet)
- IEEE 802.3ab, 1000Base-TX
- IEEE 802.3z, 1000Base-FX Gigabit
- IEEE 802.3x Flow control

Power
- MIL-STD-1275B & MIL-STD-704A Surge and Spike protection
- Voltage input: 24Vdc nominal (18-36V)
- Power consumption: 2.8W typical
- Chassis grounding

Electromagnetic
- MIL-STD-461E Electromagnetic compatibility
- CE-102, CS-114, CS-115, CS-116, RE-102, RS-103

Environmental : shock/vibration/humidity
- MIL-STD-810F, 501.4I, 501.4II, 502.4I, 502.4II, 507.4, 500.4II, 514, 516I, 516VI, 514.5, 512.4
- IP67/68

Physical
- Dimensions: 169mm (L) x 149 (W) x 65(H), including connectors & hardware
- Weight: 1.260 kg

Installation
- Set of Four 4x4.5 mounting holes on bottom for mounting to any flat surface.
- Carrying handles - Optional

Cooling
- No moving parts. Passive cooling.

Operating temp
- -35°C to +75°C (-31°F to +167°F) / -35°C Cold start-up

Storage temp
- -45°C to +85°C (-49°F to +185°F)

Dimensional line drawing
All measurements are in millimeters

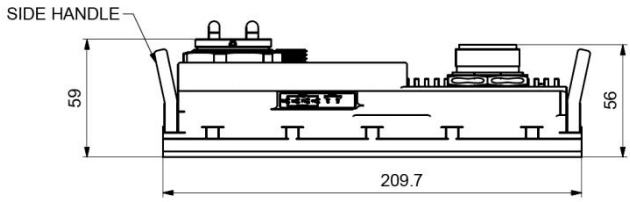

VIEW WITHOUT PROTECTION CAPS

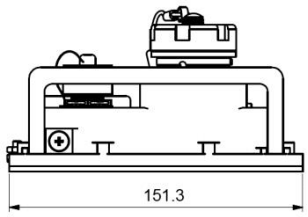

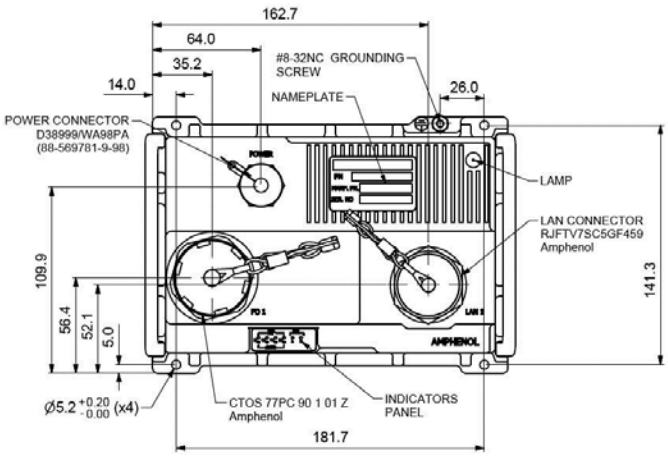

		Description
Part number	RES-GMC-1M-RJF-CTOS	• MIL-STD Rugged Ethernet Media Converter with CTOS fiber connector • 1 x 10/100/1000TX to 1000SX, MM
	RES-GMC-1S-RJF-CTOS	• MIL-STD Rugged Ethernet Media Converter with CTOS fiber connector • 1 x 10/100/1000TX to 1000LX, SM, 10 KM
	RES-GMC-1M-RJF-TACBEAM	• MIL-STD Rugged Ethernet Media Converter with TAC BEAM fiber connector • 2 x 10/100/1000TX to 2 x 1000SX, MM
	RES-GMC-1S-RJF-TACBEAM	• MIL-STD Rugged Ethernet Media Converter with TAC BEAM fiber connector • 2 x 10/100/1000TX to 2 x 1000LX, SM, 10 KM

▶ For accessories, please consult us.

RES-GMC with Butt Joint Fiber Connector Military Ethernet Media Converter

NEW

For harsh environment - Fully MIL-STD compliant

Amphenol's RES-GMC is a MIL-STD rugged, unmanaged-military-grade security gateway, offering up to 2 Gigabit security gateways per device for unidirectional and data diodes solution for total isolation between two network with different security classification. The unit supports PoE on 2 ports (IEEE802.3af and IEEE802.3at).

Developed for military and harsh environment applications, the RES-GMC features mechanical packaging enhancements designed for MIL-STD-810F airborne and ground environmental compliance and high reliability.
The unit has been especially hardened to improve ingress, impact, and shock/vibration protection, as well as eliminate all moving parts through passive cooling, and interface through sealed MIL-D-38999 circular connectors.

Leveraging best-in-class switching technology, the RES-GMC series serves as a robust solution to extend your Tactical Gigabit Ethernet network connectivity of up to 120Km over fiber. Compact in size, the RES-GMC is particularly useful for remote and space-constrained locations either on ground vehicle environments or airborne.

Military applications

- Data acquisition & transmission
- Battlefield communication C4ISR
- Rugged Networks
- Combat vehicles
- Avionic & shipboard systems

Key features

- **Ethernet ports**
  - 10/100/1000 Base TX to 100/1000 Base FX-(MM/SM) Network isolator One way data flow for total isolation between classified and unclassified networks
  - Up to 2 security gateways per device over optical fiber
- **Networking**
  - Full wire-speed forwarding rate
  - Option for Up to 2 ports PoE - IEEE802.3af, IEEE802.3at
  - Auto MDI-II, MDI-X, FDX, HDX, Flow control
  - Auto-negotiation and fixed settings via DIP switch
  - Jumbo frame support
  - Option for one way fiber security
- **Connectors**
  - MIL-D-38999 (Power & Ethernet signals)
  - Power connector type: D38999/24WA98PN
  - LAN connector type: D38999/24WB35SN (2 ports model) or RJFTV (1 port model)
  - Fiber connector type: TVOP arrangement 11-02
- **Chassis**
  - Low profile rugged aluminium extrusion
  - Conductively cooled w/custom internal heat-sinks
  - Ingress protection against sand, dust and moisture
  - Anodize coating, MIL-A-8625, Type II, Class 2
- **Standards**
  - MIL-STD-1275, MIL-STD-704A, MIL-STD-461E,
  - MIL-STD-810F GM, IP67/68
- **Voltage operation**
  - 24VDC (18VDC ~ 36VDC), 48VDC for PoE versions

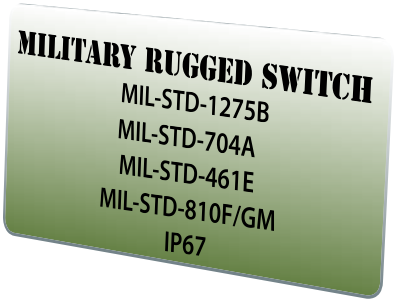

Product specifications

Performance
- 26.8 Mpps wire speed forwarding rate
- 20 Gbps maximum forwarding bandwidth
- 4K MAC address
- 2 LED indication (Speed, Link/Activity) per port
- Wire-speed reception and transmission

Standards compliance
- IEEE 802.3, 10 Mbps 10BASE-T (Ethernet)
- IEEE 802.3u, 100 BASE-TX 100 Mbps (Fast Ethernet)
- IEEE 802.3ab, 1000Base-TX
- IEEE 802.3z, 1000Base-FX Gigabit
- IEEE 802.3af, IEEE802.3at

Power
- MIL-STD-1275B & MIL-STD-704A Surge and Spike protection
- Voltage input: 24Vdc nominal (18-36V)
- Power consumption: 2.8W typical
- Chassis grounding

Electromagnetic
- MIL-STD-461E Electromagnetic compatibility
- CE-102, CS-114, CS-115, CS-116, RE-102, RS-103

Environmental : shock/vibration/humidity
- MIL-STD-810F, 501.4I, 501.4II, 502.4I, 502.4II, 507.4, 500.4II, 514, 516I, 516VI, 514.5, 512.4
- IP67/68

Physical
- Dimensions: 170mm(L) x 150(W) x 65(H), including connectors & hardware
- Weight: 1 kg

Installation
- Set of Four 4x4.5 mounting holes on bottom for mounting to any flat surface.
- Carrying handles - Optional

Cooling
- No moving parts. Passive cooling.

Operating temp
- -35°C to +75°C (-31°F to +167°F) / -35°C Cold start-up

Storage temp
- -45°C to +85°C (-49°F to +185°F)

Dimensional line drawing
All measurements are in millimeters

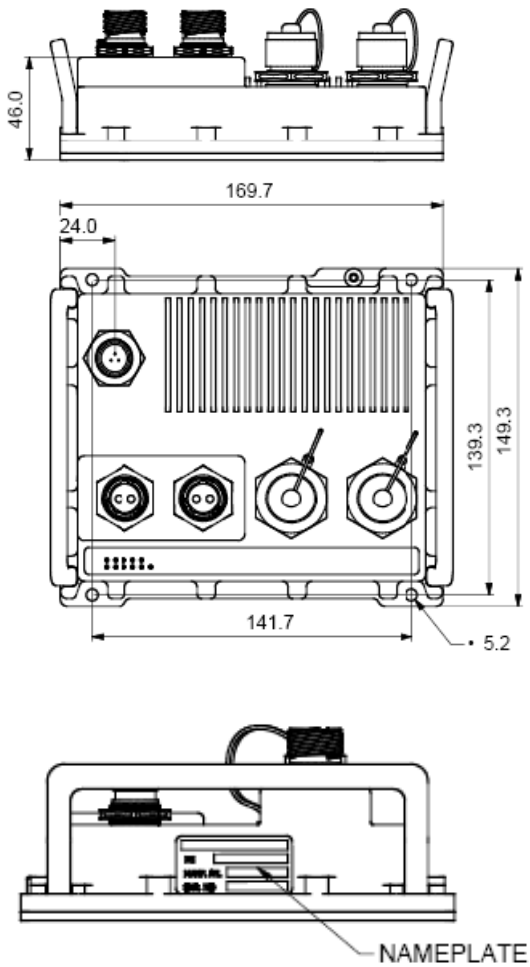

		Description
Part number	RES-GMC-1M	• MIL-STD Rugged Ethernet Media Converter with TVOP connector • 1 x 10/100/1000TX to 1000SX, MM
	RES-GMC-1S	• MIL-STD Rugged Ethernet Media Converter with TVOP connector • 1 x 10/100/1000TX to 1000LX, SM, 10 KM
	RES-GMC-2M	• MIL-STD Rugged Media Converter with TVOP connector • 2 x 10/100/1000TX to 2 x 1000SX, MM
	RES-GMC-2S	• MIL-STD Rugged Media Converter with TVOP connector • 2 x 10/100/1000TX to 2 x 1000LX, SM, 10 KM

▶ For accessories, please consult us.

RES-GMC-1M-FORC
Military Ethernet Media Converter with Remote Control

NEW

For fiber extension of existing systems on the Field

Amphenol's RES-GMC-1M-FORC is a MIL-STD rugged, unmanaged-military-grade Media converter, offering one Gigabit copper ports 10/100/1000Base-TX and one 100/1000Base-SX fiber ports.

Combining the RES-GMC-1M-FORC with a fiber drum, your network will be extended on the field.

- Simply add 2 media converters unit 1 and unit 2 + a fiber drum
- Use our special feature: unit 2 is remote controlled by unit 1

Due to extreme low consumption of unit 2 in STANDBY mode, your battery on the field will operate longer.

Developed for military and harsh environment applications, the RES-GMC-1M-FORC features mechanical packaging enhancements designed for MIL-STD-810F airborne and ground environmental compliance and high reliability.
The unit has been especially hardened to improve ingress, impact, and shock/vibration protection, as well as eliminate all moving parts through passive cooling, and interface through sealed MIL-D-38999 circular connectors.

Leveraging best-in-class technology, the RES-GMC-1M-FORC series serves as a robust solution to extend your Tactical Gigabit Ethernet network connectivity over fiber.

Military applications

- Data acquisition & transmission
- Battlefield communication C4ISR
- Rugged Networks
- Combat vehicles

Where your system can be extended through network.

Unit 1

Fiber drum

Key features

- **Ethernet ports**
  - 10/100/1000 Base TX to 100/1000 Base SX-(MM) Media converter
- **Networking**
  - Full wire-speed forwarding rate
  - Store-and-forward or Pass through mechanism
  - Auto MDI-II, MDI-X, FDX, HDX, Flow control
  - Auto-negotiation and fixed settings via DIP switch
  - Jumbo frame support
  - Link loss forwarding mechanism
- **Connectors**
  - MIL-D-38999 (Power & Ethernet signals)
  - Fiber connector type: CTOS 77 PC (2 fibers for Ethernet, 1 fiber for remote control)
  - Protective caps over each connector
- **Chassis**
  - Low profile rugged aluminium extrusion
  - Conductively cooled w/custom internal heat-sinks
  - Ingress protection against sand, dust and moisture
  - Anodize coating, MIL-A-8625, Type II, Class 2
  - Color: sand mate
- **Standards**
  - MIL-STD-1275, MIL-STD-704A, MIL-STD-461E,
  - MIL-STD-810F GM, IP67/68

Unit 2

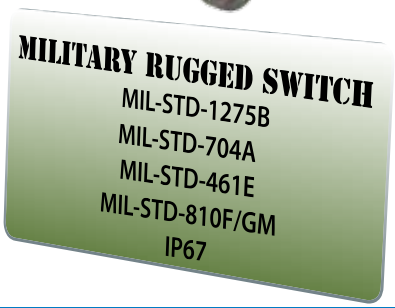

Product specifications

Performance
- 26.8 Mpps wire speed forwarding rate
- 2 Gbps maximum forwarding bandwidth
- 4K MAC address
- 2 LED indication (Speed, Link/Activity) per port
- Wire-speed reception and transmission

Standards compliance
- IEEE 802.3, 10 Mbps 10BASE-T (Ethernet)
- IEEE 802.3u, 100 BASE-TX 100 Mbps (Fast Ethernet)
- IEEE 802.3ab, 1000Base-TX
- IEEE 802.3z, 1000Base-FX Gigabit
- IEEE 802.3x Flow control

Power
- MIL-STD-1275B & MIL-STD-704A Surge and Spike protection
- Voltage input: 24Vdc nominal (18-36V)
- Power switching of the external DC input of unit 2 upon ON/OFF command from unit 1
- Maximum power consumption: 5W for unit 1, 10W for unit 2
- Standby consumption of unit 2: <0.1W
- Chassis grounding

Electromagnetic
- MIL-STD-461E Electromagnetic compatibility

Environmental : shock/vibration/humidity
- MIL-STD-810F, 501.4I, 501.4II, 502.4I, 502.4II, 507.4, 500.4II, 514, 516I, 516VI, 514.5, 512.4
- IP67/68

Physical
- Dimensions: 170mm(L) x 140(W) x 110(H), including connectors & hardware
- Weight: 1.55kg for unit 1, 1.80kg for unit 2

Installation
- Set of Four 4x4.3 mounting holes on bottom for mounting to any flat surface.

Cooling
- No moving parts. Passive cooling.

Operating temp
- -35°C to +75°C (-31°F to +167°F) / -35°C Cold start-up

Storage temp
- -45°C to +85°C (-49°F to +185°F)

Dimensional line drawing
All measurements are in millimeters

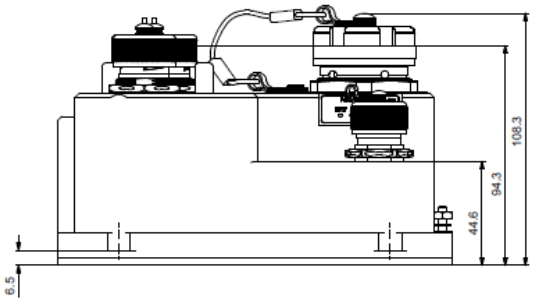

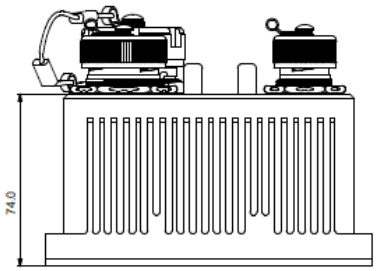

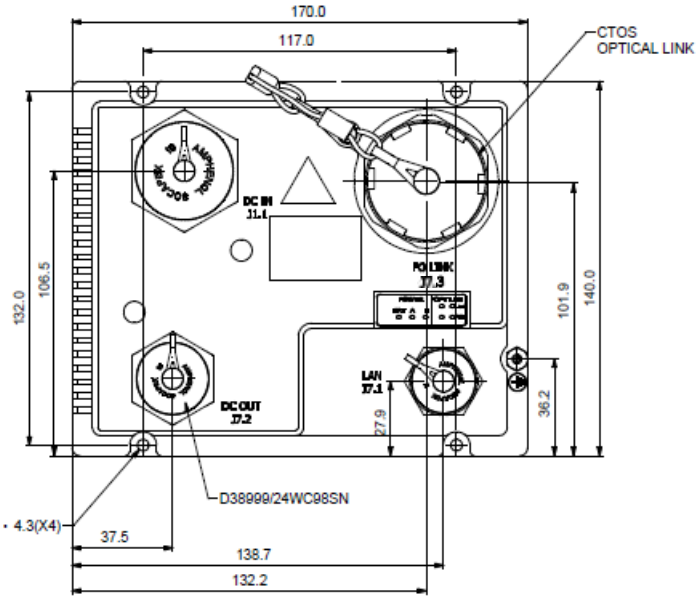

		Description
Part number	RES-GMC-1M-FORC-1	MIL-STD Rugged Gigabit Media Converter unit 1, 1x RJF connector, 1x fiber CTOS connector, MM, SX
	RES-GMC-1M-FORC-2	MIL-STD Rugged Gigabit Media Converter unit 2, 1x RJF connector, 1x fiber CTOS connector, MM, SX, remote controlled by unit 1
	CTOS drum	Please consult us

▶ **For accessories, please consult us.**

RES-SCE-AC-8US

Unmanaged miniature portable Ethernet switch - 8 fast ports

Military ethernet switch for harsh environment - Fully MIL-STD compliant

NEW

Amphenol's RES-SCE-AC-8US is a MIL-STD rugged, unmanaged-military-grade Ethernet switch, offering 8 Fast Ethernet 10/100 Ports. The portable rugged Ethernet switch is intended for Command Post Man Packable.

Developed for mobile portable military and harsh environment applications, the RES-SCE-AC-8US features mechanical packaging enhancements designed for MIL-STD-810F airborne and ground environmental compliance and high reliability. The unit has been especially hardened to improve ingress, impact, and shock/vibration protection, as well as eliminate all moving parts through passive cooling, and interface through sealed MIL-SCE circular connectors.

Leveraging best-in-class switching technology, the RES-SCE-AC-8US serves as a robust solution for providing local area network (LAN) connectivity to IP-enabled computing and net-centric devices. Compact in size, the RES-SCE-AC-8US is particularly useful for expanding port density in space-constrained airborne and ground vehicle environments.

Military applications

- Data acquisition & transmission
- Battlefield communication C4ISR
- Rugged Networks
- Mobile communications
- Combat vehicles
- Avionic & shipboard systems

Key features

- **Ethernet ports**
  - 8 x switched 10/100 (Fast Ethernet) ports
- **Networking**
  - Full wire-speed forwarding rate
  - Store-and-forward mechanism
  - Auto MDI-II, MDI-X
  - Auto-negotiation protocol
  - Address look-up
- **Connectors**
  - Power + LAN connector : SCE2-B-76A06-07SN-001
- **Chassis**
  - Low profile rugged aluminium extrusion
  - Conductively cooled w/ custom internal heat-sinks
  - Ingress protection against sand, dust and moisture
  - Anodize coating, MIL-A-8625, Type II, Class 2
- **Standards**
  - MIL-STD-461E, MIL-STD-810F/G/GM, IP67/68
- **Voltage operation**
  - 5VDC (USB) INPUT, shared with LAN Port Number 1

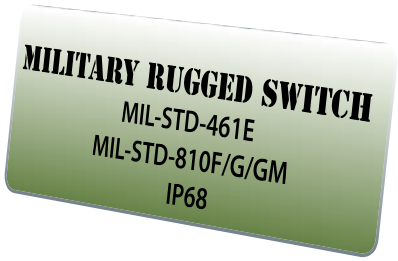

Product specifications

Performance
- 128K byte of SRAM for frame buffering
- 2.0 Gbps high-performance memory bandwidth
- LED indication (speed, link/activity) per port - Optional
- Wire-speed reception and transmission
- Integrated address look-up engine
- Automatic address learning

Standards compliance
- IEEE 802.3 10 Mbps 10BASE-T (Ethernet)
- IEEE 802.3u 100BASE-TX 100 Mbps (Fast Ethernet)
- IEEE 802.3x flow control

Power
- Voltage input: 5Vdc nominal - Optional USB sourcing
- Power consumption: 2W typical
- Chassis grounding

Electromagnetic
- MIL-STD-461E electromagnetic compatibility
- CE-102, CS-114, CS-115, CS-116, RE-102, RS-103

Environmental
- MIL-STD-810F/G/GM
- Random vibration (514.5I), Bench handling (516.6VI), High temp (501.5I, II), Low temp (502.5I), Humidity (507.5II), Air pressure (500.5I, II), Blowing rain (506.5I), Immersion (512.5I), Salt atmosphere (509.5I), Blowing dust (510.5I), Loose cargo vibration (514.6II), Wind analysis
- IP67/68

Physical
- Dimensions: 82.2mm (L) x 61.4 (W) x 26 (H), Not including connectors Dust Caps.
- Weight: 140g - Not including dust caps

Installation
- Portable, flat for mounting to any flat surface.

Cooling
- No moving parts. Passive cooling.

Operating temp
- -35°C to +75°C (-31°F to +167°F) / -35°C Cold start-up

Storage temp
- -45°C to +85°C (-49°F to +185°F)

Dimensional line drawing
All measurements are in millimeters

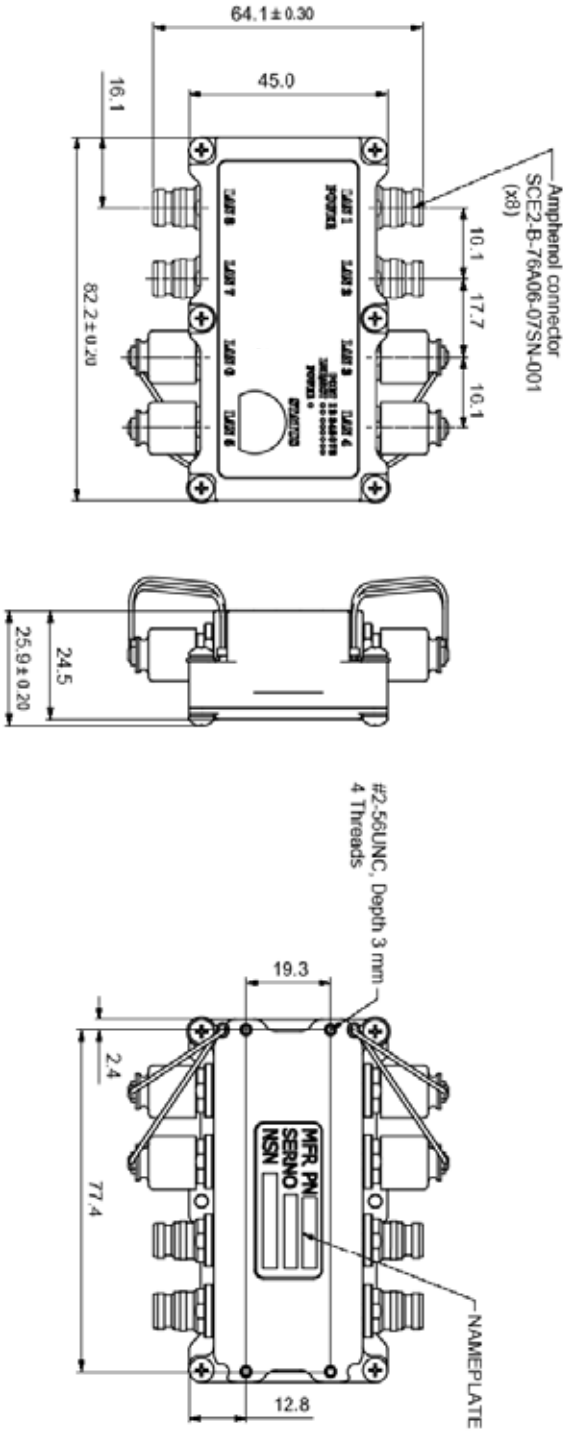

		Description
Part number	**RES-SCE-AC-8US**	• RES-SCE-AC-8US • MIL-STD Rugged • 8 x 10/100TX • Unmanaged switch
	RES-SCE-CBL-1M50	• Starter cable set for MILTECH-308 • MIL-SCE to RJ-45 connectors • 1m50 (5 feet) length (Data or Data+Power)

▶ For accessories, please consult us.

NEW

RES-SCE-8MG

Managed miniature portable Ethernet switch - 8 Gigabit ports

Military ethernet switch for harsh environment - Fully MIL-STD compliant

Amphenol's RES-SCE-8MG is a MIL-STD rugged, managed-military-grade Ethernet switch, offering 8 Gigabit Ethernet 10/100/1000 Ports. The portable rugged Ethernet switch is intended for Command Post Man Packable.

Developed for mobile portable military and harsh environment applications, the RES-SCE-8MG features mechanical packaging enhancements designed for MIL-STD-810F airborne and ground environmental compliance and high reliability. The unit has been especially hardened to improve ingress, impact, and shock/vibration protection, as well as eliminate all moving parts through passive cooling, and interface through sealed miniature circular connectors.

Leveraging best-in-class switching technology, the RES-SCE-8MG serves as a robust solution for providing local area network (LAN) connectivity to IP-enabled computing and net-centric devices. Compact in size, the RES-SCE-8MG is particularly useful for expanding port density in space-constrained airborne and ground vehicle environments.

Military applications

- Data acquisition & transmission
- Battlefield communication C4ISR
- Rugged Networks
- Mobile communications
- Combat vehicles
- Avionic & shipboard systems

Key features

- **Ethernet ports**
  - Managed 8 x switched 10/ 100/ 1000 ports
- **Networking**
  - Spanning Tree (802.1d), RSTP (802.1w) and multiple Spanning Tree (802.1S) for fast recovery rings
  - Security via Radius Authentication 802.1x, Port Security, Port Mirroring
  - Multicasting (IGMP Snooping), GARP, GMRP, and GVRP Broadcasting and flooding Control up to 8K Groups
  - 802.1q Tagged based VLAN up to 4K VLAN groups
  - QoS Multi-Layer Classifier, 802.1p, ToS/DSCP traffic classification. WFQ, Strict Queuing.
  - Bridge support for Q-in-Q
  - Link Aggregation 802.3AD
  - WEB, CLI, Telnet Management
- **Connectors**
  - Power connector type: SCE2-B-76A06-07SN
  - LAN connector type: SCE2-B-76A07-14SN-001
  - LED indication per port (speed, link/activity)
- **Chassis**
  - Low profile rugged aluminium extrusion
  - Conductively cooled w/ custom internal heat-sinks
  - Ingress protection against sand, dust and moisture
  - Anodize coating, MIL-A-8625, Type II, Class 2
- **Standards**
  - MIL-STD-1275, MIL-STD-704A, MIL-STD-461E, MIL-STD-810F GM, IP67/68
- **Performance**
  - 26.8 Mpps wire speed forwarding rate
  - 20 Gbps maximum forwarding bandwidth
  - 8K MAC address

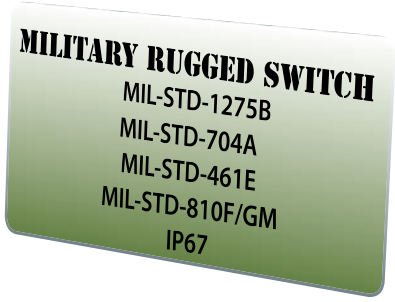

Amphenol

Product specifications

Standards compliance
- IEEE 802.1x MAC based Authentication
- IEEE 802.1Q Vlan Tagging
- IEEE 802.1P QoS
- IEEE 802.1S Multiple STP
- IEEE 802.1W Rapid STP
- IEEE 802.3 AD Link Aggregation

Power
- Exceed MIL-STD-1275B Surge and Spike protection
- Voltage Input: 24Vdc Nominal (16-36 VDC)
- Power Consumption: 7.2W Max - 5W Typical
- Chassis grounding

Electromagnetic
- MIL-STD-461E Electromagnetic compatibility
- CE-102, CS-114, CS-115, CS-116, RE-102, RS-103

Environmental
- MIL-STD-810F/G/GM
- Random vibration (514.5I), Bench handling (516.6VI), High temp (501.5I, II), Low temp (502.5I), Humidity (507.5II), Air pressure (500.5I, II), Blowing rain (506.5I), Immersion (512.5I), Salt atmosphere (509.5I), Blowing dust (510.5I), Loose cargo vibration (514.6II), Wind analysis
- IP67/68

Physical
- Dimensions: 100mm (L) x 89 (W) x 36 (H), including connectors & hardware.
- Weight: 390g

Installation
- Set of Four 4-40 threads on bottom for mounting to any flat surface

Cooling
- No moving parts. Passive cooling.

Operating temp
- -35°C to +75°C (-31°F to +167°F) / -35° C Cold start-up

Storage temp
- -45°C to +85°C (-49°F to +185°F)

Dimensional line drawing
All measurements are in millimeters

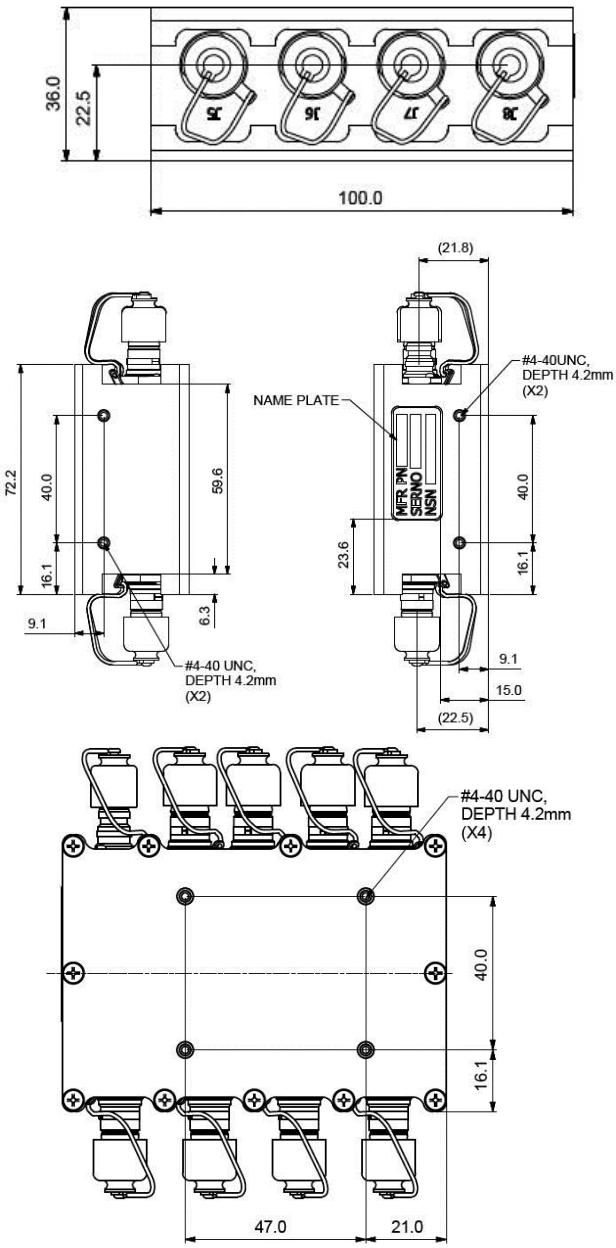

		Description
Part number	RES-SCE-8MG	• MIL-STD Rugged • Managed miniature switch • 8 x 10/100/1000TX • With caps
	RES-SCE-8MG-CBL-ETH-RJ45-2M	• Ethernet cordset for LAN 1 to 8 • With RJFSFTP5E cable • RJ45 end plug • 2 m long

▶ For accessories, please consult us.

Amphenol

RESMLAC-8US-CAPS

Unmanaged military Ethernet switch, MIL-DTL-38999 connectors 8 fast ports

Military ethernet switch for harsh environment - Fully MIL-STD compliant

NEW

Amphenol's RESMLAC-8US-CAPS is a MIL-STD rugged, unmanaged-military-grade Ethernet switch, offering 8 Fast Ethernet 10/100 Ports.

Developed for military and harsh environment applications, the RESMLAC-8US-CAPS features mechanical packaging enhancements designed for MIL-STD-810F airborne and ground environmental compliance and high reliability. The unit has been especially hardened to improve ingress, impact, and shock/vibration protection, as well as eliminate all moving parts through passive cooling, and interface through sealed MIL-D-38999 circular connectors.

Leveraging best-in-class switching technology, the RESMLAC-8US-CAPS serves as a robust solution for providing local area network (LAN) connectivity to IP-enabled computing and net-centric devices. Compact in size, the RESMLAC-8US-CAPS is particularly useful for expanding port density in space-constrained airborne and ground vehicle environments.

Military applications

- Data acquisition & transmission
- Battlefield communication C4ISR
- Rugged Networks
- Mobile communications
- Combat vehicles
- Avionic & shipboard systems

Key features

- **Ethernet ports**
  - 8 x switched 10/100 (Fast Ethernet) ports
- **Networking**
  - Full wire-speed forwarding rate
  - Store-and-forward mechanism
  - Auto MDI-II, MDI-X
  - Auto-negotiation protocol
  - Address look-up
- **Connectors**
  - MIL-D-38999 (Power & Ethernet signals)
  - Power connector type: D38999/24WA98PA
  - LAN connector type: D38999/24WA35SN
- **Chassis**
  - Low profile rugged aluminium extrusion
  - Conductively cooled w/ custom internal heat-sinks
  - Ingress protection against sand, dust and moisture
  - Anodize Coating, MIL-A-8625, Type II, Class 2
- **Standards**
  - MIL-STD-1275, MIL-STD-704A, MIL-STD-461E, MIL-STD-810F GM, IP67/68
- **Voltage operation**
  - 24VDC (18VDC ~ 36VDC)

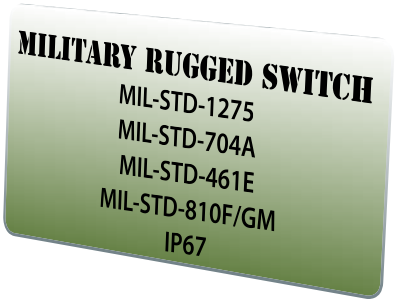

Product specifications

Performance
- 128K byte of SRAM for frame buffering
- 2.0 Gbps high-performance memory bandwidth
- 2 LED indication (speed, link/activity) per port
- Wire-speed reception and transmission
- Integrated address look-up engine
- Automatic address learning

Standards compliance
- IEEE 802.3 10 Mbps 10BASE-T (Ethernet)
- IEEE 802.3u 100BASE-TX 100 Mbps (Fast Ethernet)
- IEEE 802.3x flow control

Power
- MIL-STD-1275B & MIL-STD 704A surge and spike protection
- Voltage input: 24Vdc nominal (18-32V)
- Power consumption: 2.8W typical
- Chassis grounding

Electromagnetic
- MIL-STD-461E electromagnetic compatibility
- CE-102, CS-114, CS-115, CS-116, RE-102, RS-103

Environmental
- MIL-STD-810F, 501.4I, 501.4II, 502.4I, 502.4II, 507.4, 500.4II, 514, 516I, 516Vi, 514.5, 512.4
- IP67/68

Physical
- Dimensions: 269mm(L) x 133(W) x 65(H), including connectors & hardware

Installation
- Set of four 4x4.5 mounting holes on bottom for mounting to any flat surface.

Cooling
- No moving parts. Passive cooling.

Operating temp
- -35°C to +75°C (-31°F to +167°F) / -35°C Cold start-up

Storage temp
- -45°C to +85°C (-49°F to +185°F)

Dimensional line drawing
All measurements are in millimeters

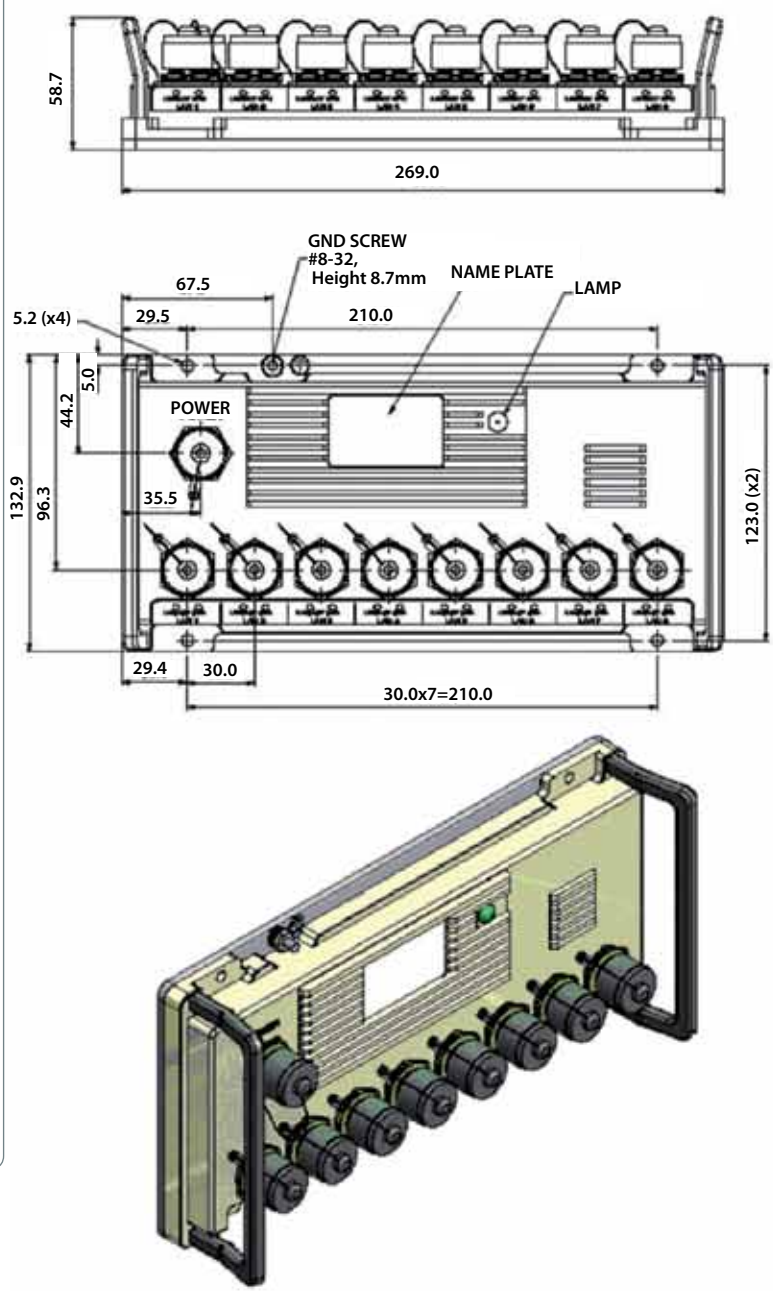

		Description
Part number	RESMLAC 8US CAPS	• MIL-STD rugged • 8 x 10/100TX • Unmanaged switch • with caps • color dark green
	RESMLAC 8US CAPS SX	• MIL-STD rugged • 8 x 10/100TX • Unmanaged switch • with caps • color black
	RESMLAC 8US CBL 1M50	• Starter cable set for RESMLAC • MIL-D-38999 to RJ-45 connectors • 1m50 (5 feet) length

▶ For accessories, please consult us.

RJSMLAC-8UG-CAPS

Unmanaged military Ethernet switch, MIL-DTL-38999 connectors 8 Gigabit ports

Military ethernet switch for harsh environment - Fully MIL-STD compliant

NEW

Amphenol's RESMLAC-8UG-CAPS is a MIL-STD rugged, unmanaged-military-grade Ethernet switch, offering 8 triple speed Ethernet (10/100 /1000) ports. Ethernet connectors are RJFTV, using RJField patented system that allows easy and quick assembly of any standard RJ45 cordset without any tool.

Developed for military and harsh environment applications, the RJSMLAC features mechanical packaging enhancements designed for MIL-STD-810F airborne and ground environmental compliance and high reliability. The unit has been especially hardened to improve ingress, impact, and shock/vibration protection, as well as eliminate all moving parts through passive cooling.

Leveraging best-in-class switching technology, the RJSMLAC serves as a robust solution for providing local area network (LAN) connectivity to IP-enabled computing and net-centric devices. Compact in size, the RJSMLAC is particularly useful for expanding port density in space-constrained airborne and ground vehicle environments.

Military applications

- Data acquisition & transmission
- Battlefield communication C4ISR
- Rugged Networks
- Mobile communications
- Combat vehicles
- Avionic & shipboard systems

Key features

- **Ethernet ports**
  - 8 x switched 10/100/1000 (Gigabit Ethernet) ports on RJFTV connectors
- **Networking**
  - Full wire-speed forwarding rate
  - Store-and-forward mechanism
  - Auto MDI-II, MDI-X
  - Auto-negotiation protocol
  - Address look-up
- **Connectors**
  - Power connector type: MIL-DTL-38999/24WA98PN
  - LAN connector type: RJFTV (coupling mechanism from MIL-DTL-38999)
  - LED indication per port (speed, link/activity)
- **Chassis**
  - Low profile rugged aluminium extrusion
  - Conductively cooled w/ custom internal heat-sinks
  - Ingress protection against sand, dust and moisture
  - Finish of epoxy-polyamide paint per MIL-C-83286, olive green, semi-gloss
- **Standards**
  - MIL-STD-1275, MIL-STD-704A, MIL-STD-461E, MIL-STD-810F GM, IP67/68
- **Voltage operation**
  - 24VDC (18VDC ~ 36VDC)

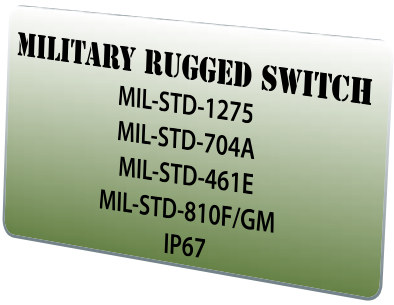

Product specifications

Performance
- 128K byte of SRAM for frame buffering
- 2.0 Gbps high-performance memory bandwidth
- 2 LED indication (speed, link/activity) per port
- Wire-speed reception and transmission
- Integrated address look-up engine
- Automatic address learning

Standards compliance
- IEEE 802.3 10BASE-T (Ethernet)
- IEEE 802.3u 100BASE-T (Fast Ethernet)
- IEEE 802.3ab 1000BASE-T (Gigabit Ethernet)
- IEEE 802.3x flow control

Power
- MIL-STD-1275B & MIL-STD 704A surge and spike protection
- Voltage input: 24Vdc nominal (18-32V)
- Power consumption: 2.8W typical
- Chassis grounding

Electromagnetic
- MIL-STD-461E electromagnetic compatibility
- CE-102, CS-114, CS-115, CS-116, RE-102, RS-103

Environmental
- MIL-STD-810F, 501.4I, 501.4II, 502.4I, 502.4II, 507.4, 500.4II, 514, 516I, 516Vi, 514.5, 512.4
- IP67/68

Physical
- Dimensions: 269mm(L) x 133(W) x 65(H), including connectors & hardware
- Weight: 1.8kg

Installation
- Set of four 4x4.5 mounting holes on bottom for mounting to any flat surface.

Cooling
- No moving parts. Passive cooling.

Operating temp
- -35°C to +75°C (-31°F to +167°F) / -35°C Cold start-up

Storage temp
- -45°C to +85°C (-49°F to +185°F)

Dimensional line drawing
All measurements are in millimeters

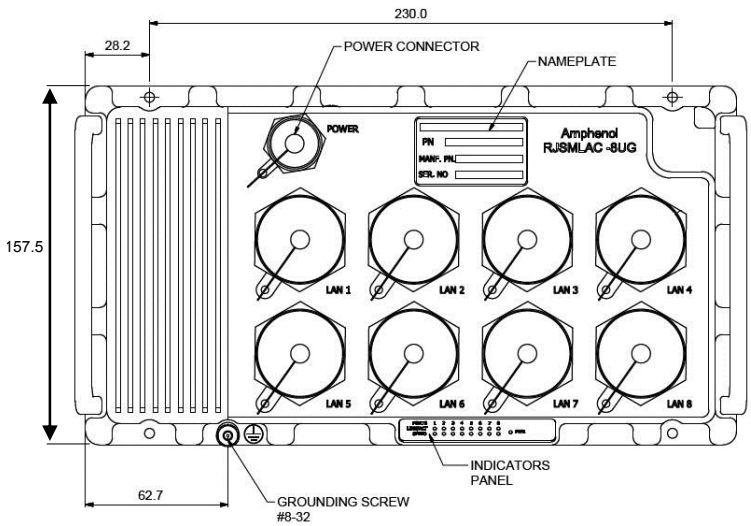

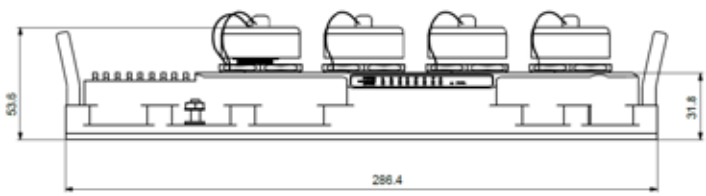

		Description
Part number	**RJSMLAC 8UG CAPS**	• MIL-STD rugged • 8 x gigabit ports • Unmanaged switch • with caps and handles • dark green

▶ **For accessories, please consult us.**

RJSMLAC-8MG-CAPS

Managed military Ethernet switch, RJFTV connectors - 8 Gigabit ports

Military ethernet switch for harsh environment - Fully MIL-STD compliant

NEW

Amphenol's RJSMLAC-8MG-CAPS is a MIL-STD Fully managed Military-grade network switch offering 8 triple speed (10/100/1000) ports. Ethernet connectors are RJFTV, using RJField patented system that allows easy and quick assembly of any standard RJ45 cordset without any tool.

Developed for military and harsh environment applications, the RJSMLAC-8MG-CAPS features mechanical packaging enhancements designed for MIL-STD-810F airborne and ground environmental compliance and high reliability. The unit has been especially hardened to improve ingress, impact, and shock/vibration protection, as well as eliminate all moving parts through passive cooling, and interface through sealed MIL-DTL-38999 circular connectors.

Leveraging best-in-class switching technology, the RJSMLAC-8MG-CAPS serves as a robust solution for providing local area network (LAN) connectivity to IP-enabled computing and net-centric devices. Compact in size, the RJSMLAC-8MG-CAPS is particularly useful for expanding port density in space-constrained airborne and ground vehicle environments.

Military applications

- Data acquisition & transmission
- Battlefield communication C4ISR
- Rugged Networks
- Mobile communications
- Combat vehicles
- Avionic & shipboard systems

Key features

- **Ethernet ports**
  - Managed 8 x switched 10/100/1000 ports on RJFTV connectors
- **Networking**
  - Spanning tree (802.1d), RSTP (802.1w) and multiple
  - Spanning tree (802.1S) for fast recovery rings
  - Security via Radius Authentication 802.1x, port security, port mirroring
  - Multicasting (IGMP Snooping), GARP, GMRP, and GVRP, Broadcasting and flooding control up to 8K groups.
  - 802.1q tagged based VLAN up to 4K VLAN groups.
  - QoS multi-layer classifier, 802.1p, ToS/DSCP traffic classification. WFQ, Strict Queuing.
  - Bridge support for Q-in-Q.
  - Link aggregation 802.3AD.
  - WEB, CLI, Telnet management.
- **Connectors**
  - Power connector type: MIL-DTL-38999/24WA98PA
  - LAN connector type: RJFTV (coupling mechanism from MIL-DTL-38999)
  - LED indication per port (Speed, Link/Activity)
- **Chassis**
  - Low profile rugged aluminium extrusion
  - Conductively cooled w/custom internal heat-sinks
  - Ingress protection against sand, dust and moisture
  - Anodize coating, MIL-A-8625, Type II, Class 2
- **Standards**
  - MIL-STD-1275, MIL-STD-704A, MIL-STD-461E,
  - MIL-STD-810F GM, IP67/68

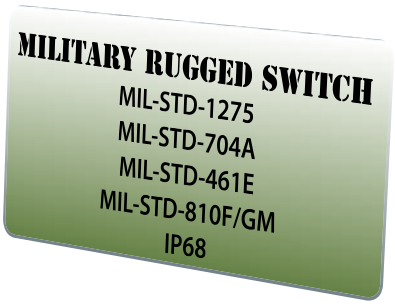

Product specifications

Volage operation
- 24VDC (18VDC ~ 32VDC)

Performance
- 26.8 Mpps wire speed forwarding rate
- 20 Gbps maximum forwarding bandwidth
- 8K MAC address

Standards compliance
- IEEE 802.1x MAC based authentication
- IEEE 802.1Q Vlan tagging
- IEEE 802.1P QoS
- IEEE 802.1S Multiple STP
- IEEE 802.1W Rapid STP
- IEEE 802.3AD Link aggregation

Power
- Exceed MIL-STD-1275B surge and spike protection
- Voltage input: 24Vdc nominal (18-32V)
- Power consumption: 2.8W typical
- Chassis grounding

Electromagnetic
- MIL-STD-461E electromagnetic compatibility
- CE-102, CS-114, CS-115, CS-116, RE-102, RS-103

Environmental : shock/vibration/humidity
- MIL-STD-810F, 501.4I, 501.4II, 502.4I, 502.4II, 507.4, 500.4II, 514, 516I, 516VI, 514.5, 512.4
- IP67/68

Physical
- Dimensions: 287mm(L) x 147(W) x 50(H), including connectors & hardware
- Weight: 1.8 kg

Installation
- Set of four 4.5 mounting holes on bottom for mounting to any flat surface.
- Carrying handles

Cooling
- No moving parts. Passive cooling.

Operating temp
- -35°C to +75°C (-31°F to +167°F) / -35°C Cold start-up

Storage temp
- -45°C to +85°C (-49°F to +185°F)

Dimensional line drawing
All measurements are in millimeters

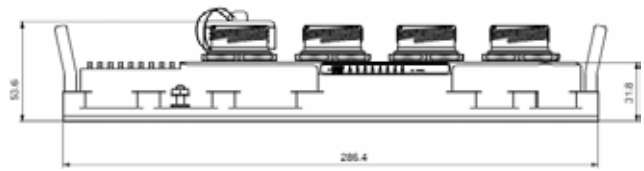

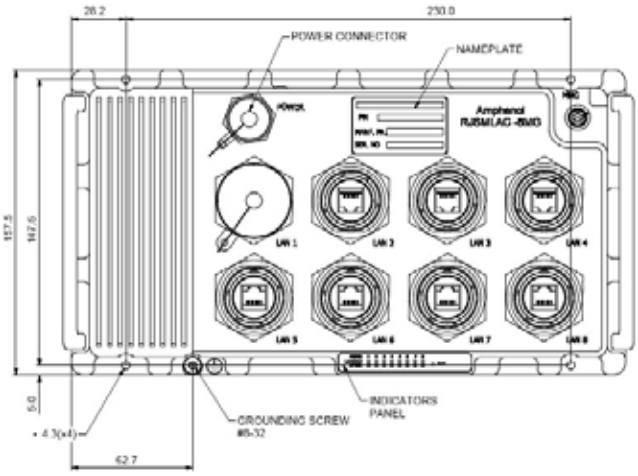

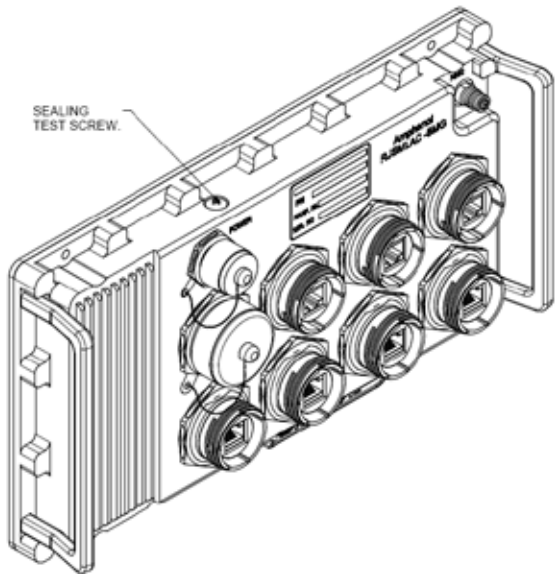

		Description
Part number	**RJSMLAC 8MG CAPS**	• MIL-STD rugged • 8 x 10/100/1000TX with RJFTV • Managed switch • With caps and handles • Dark green

▶ **For accessories, please consult us.**

RESMLAC-8MG-CAPS

Managed military Ethernet switch, MIL-DTL-38999 connectors 8 Gigabit ports

Military ethernet switch for harsh environment - Fully MIL-STD-compliant

NEW

Amphenol's RESMLAC-8MG-CAPS is a MIL-STD fully managed Military-grade network switch offering 8 triple speed (10/100/1000) ports.

Developed for military and harsh environment applications, the RESMLAC-8MG-CAPS features mechanical packaging enhancements designed for MIL-STD-810F airborne and ground environmental compliance and high reliability. The unit has been especially hardened to improve ingress, impact, and shock/vibration protection, as well as eliminate all moving parts through passive cooling, and interface through sealed MIL-DTL-38999 circular connectors.

Leveraging best-in-class switching technology from Amphenol, the RESMLAC-8MG-CAPS serves as a robust solution for providing local area network (LAN) connectivity to IP-enabled computing and net-centric devices. Compact in size, the RESMLAC-8MG-CAPS is particularly useful for expanding port density in space-constrained airborne and ground vehicle environments.

Military applications

- Data acquisition & transmission
- Battlefield communication C4ISR
- Rugged Networks
- Mobile communications
- Combat vehicles
- Avionic & shipboard systems

Key features

- **Ethernet ports**
  - Managed 8 x switched 10/100/1000 ports
- **Networking**
  - Spanning tree (802.1d), RSTP (802.1w) and multiple
  - Spanning tree (802.1S) for fast recovery rings
  - Security via Radius authentication 802.1x, port security, port mirroring
  - Multicasting (IGMP Snooping), GARP, GMRP, and GVRP, Broadcasting and flooding control up to 8K groups.
  - 802.1q tagged based VLAN up to 4K VLAN groups.
  - QoS multi-layer classifier, 802.1p, ToS/DSCP traffic classification. WFQ, Strict Queuing.
  - Bridge support for Q-in-Q.
  - Link aggregation 802.3AD.
  - WEB, CLI, Telnet management.
- **Connectors**
  - Power connector type: MIL-DTL-38999/24WA98PA
  - LAN connector type: MIL-D-38999/24WB35SN
  - LED indication per port (Speed, Link/Activity)
- **Chassis**
  - Low profile rugged aluminium extrusion
  - Conductively cooled w/custom internal heat-sinks
  - Ingress protection against sand, dust and moisture
  - Anodize coating, MIL-A-8625, Type II, Class 2
- **Standards**
  - MIL-STD-1275, MIL-STD-704A, MIL-STD-461E,
  - MIL-STD-810F GM, IP67/68
- **Voltage operation**
  - 24VDC (18VDC ~ 32VDC)

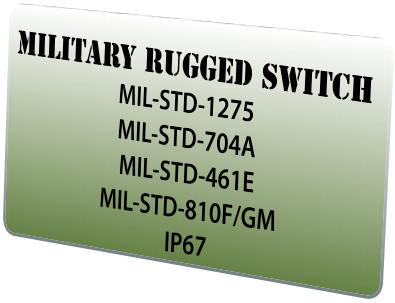

Product specifications

Performance
- 26.8 Mpps wire speed forwarding rate
- 20 Gbps maximum forwarding bandwidth
- 8K MAC address

Standards compliance
- IEEE 802.1x MAC based authentication
- IEEE 802.1Q Vlan Tagging
- IEEE 802.1P QoS
- IEEE 802.1S Multiple STP
- IEEE 802.1W Rapid STP
- IEEE 802.3AD Link aggregation

Power
- Exceed MIL-STD-1275B surge and spike protection
- Voltage input: 24Vdc nominal (18-32V)
- Power consumption : 7W typical
- Chassis grounding

Electromagnetic
- MIL-STD-461E electromagnetic compatibility
- CE-102, CS-114, CS-115, CS-116, RE-102, RS-103

Environmental : shock/vibration/humidity
- MIL-STD-810F, 501.4I, 501.4II, 502.4I, 502.4II, 507.4, 500.4II, 514, 516I, 516VI, 514.5, 512.4
- IP67/68

Physical
- Dimensions: 269mm(L) x 133(W) x 79(H), including connectors & hardware
- Weight: 1.5 kg

Installation
- Set of four 4.5 mounting holes on bottom for mounting to any flat surface.
- Carrying handles

Cooling
- No moving parts. Passive cooling.

Operating temp
- -35°C to +75°C (-31°F to +167°F) / -35°C Cold start-up

Storage temp
- -45°C to +85°C (-49°F to +185°F)

Dimensional line drawing
All measurements are in millimeters

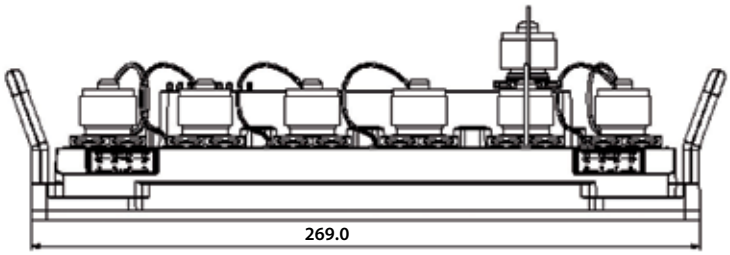

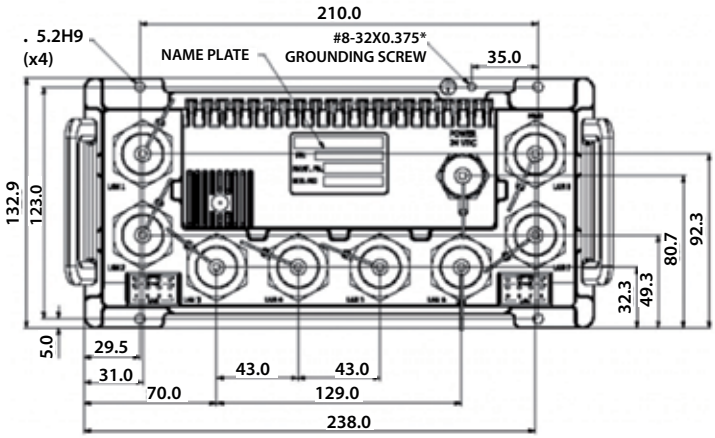

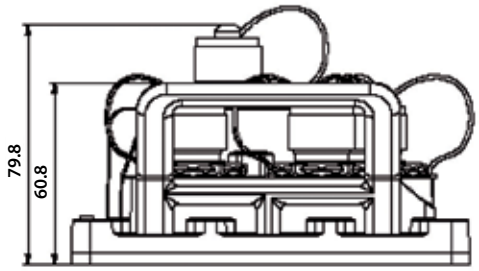

		Description
Part number	RESMLAC 8MG CAPS	• MIL-STD Rugged • 8 x 10/100/1000TX • Managed switch • with caps and handles • dark green
	RESMLAC 8MG CBL 1M50	• Starter cable set for RESMLAC • MIL-D-38999 to RJ-45 connectors • 1m50 (5 feet) length

▶ For accessories, please consult us.

Amphenol

RESMLAC-8MG-CAPS-F35

Managed military Ethernet switch, MIL-DTL-38999 connectors 8 Gigabit ports

Military ethernet switch for harsh environment - Fully MIL-STD-compliant

NEW

Amphenol's RESMLAC 8MG CAPS F35 is a MIL-STD fully managed Military-grade network switch offering 8 triple speed (10/100/1000) ports.

Developed for military and harsh avionic applications, the RESMLAC 8MG CAPS F35 features mechanical packaging enhancements designed for MIL-STD-810F airborne and ground environmental compliance and high reliability. The unit has been especially hardened to improve ingress, impact, and shock/vibration protection, as well as eliminate all moving parts through passive cooling, and interface through sealed MIL-DTL-38999 circular connectors.

Leveraging best-in-class switching technology from Amphenol, the RESMLAC 8MG CAPS F35 serves as a robust COTS solution for providing local area network (LAN) connectivity to IP-enabled computing and net-centric devices. Compact in size, the RESMLAC 8MG CAPS F35 is particularly useful for expanding port density to tactical IP routers in space-constrained airborne and ground vehicle environments.

Military applications

- Data acquisition & transmission
- Battlefield communication C4ISR
- Rugged Networks
- Mobile communications
- Combat vehicles
- Avionic & shipboard systems

Key features

- **Ethernet ports**
  - Managed 8 x switched 10/100/1000 ports
- **Networking**
  - Spanning tree (802.1d), RSTP (802.1w) and multiple
  - Spanning tree (802.1S) for fast recovery rings
  - Security via Radius authentication 802.1x, port security, port mirroring
  - Multicasting (IGMP Snooping), GARP, GMRP, and GVRP, Broadcasting and flooding control up to 8K groups.
  - 802.1q tagged based VLAN up to 4K VLAN groups.
  - QoS multi-layer classifier, 802.1p, ToS/DSCP traffic classification. WFQ, Strict Queuing.
  - Bridge support for Q-in-Q.
  - Link aggregation 802.3AD.
  - WEB, CLI, Telnet management.
- **Connectors**
  - Power connector type: MIL-DTL-38999/24WB35PN
  - LAN connector type: MIL-D-38999/24WF35PN
  - LED indication per port (Speed, Link/Activity)
- **Chassis**
  - Low profile rugged aluminium extrusion
  - Conductively cooled w/custom internal heat-sinks
  - Ingress protection against sand, dust and moisture
  - Anodize coating, MIL-A-8625, Type II, Class 2
- **Standards**
  - MIL-STD-1275B, MIL-STD-704A, MIL-STD-461A,
  - MIL-STD-810F GM, IP67/68
- **Voltage operation**
  - Nominal 24VDC

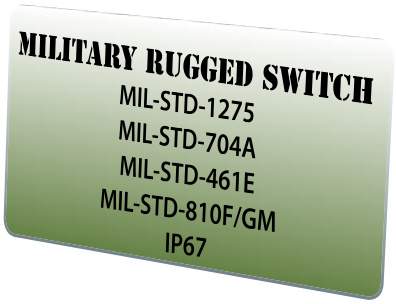

Product specifications

Performance
- 26.8 Mpps wire speed forwarding rate
- 20 Gbps maximum forwarding bandwidth
- 8K MAC address

Standards compliance
- IEEE 802.1x MAC based authentication
- IEEE 802.1Q Vlan Tagging
- IEEE 802.1P QoS
- IEEE 802.1S Multiple STP
- IEEE 802.1W Rapid STP
- IEEE 802.3AD Link aggregation

Power
- Exceed MIL-STD-1275B surge and spike protection
- Voltage input: 24Vdc nominal (18-32V)
- Power consumption : 7W typical
- Chassis grounding

Electromagnetic
- Exceed MIL-STD-461A electromagnetic compatibility
- RE-02, RS-03

Environmental : shock/vibration/humidity
- MIL-STD-810F, 501.4I, 501.4II, 502.4I, 502.4II, 507.4, 500.4II, 514, 516I, 516VI, 514.5, 512.4

Physical
- Dimensions: 209.6mm(L) x 136(W) x 44.4(H), including connectors
- Weight: 1.1 kg

Installation
- Set of four #10-32 captive screws for mounting to any flat surface

Cooling
- No moving parts. Passive cooling.

Operating temp
- -35°C to +75°C (-31°F to +167°F) / -35°C Cold start-up

Storage temp
- -45°C to +85°C (-49°F to +185°F)

Dimensional line drawing
All measurements are in millimeters

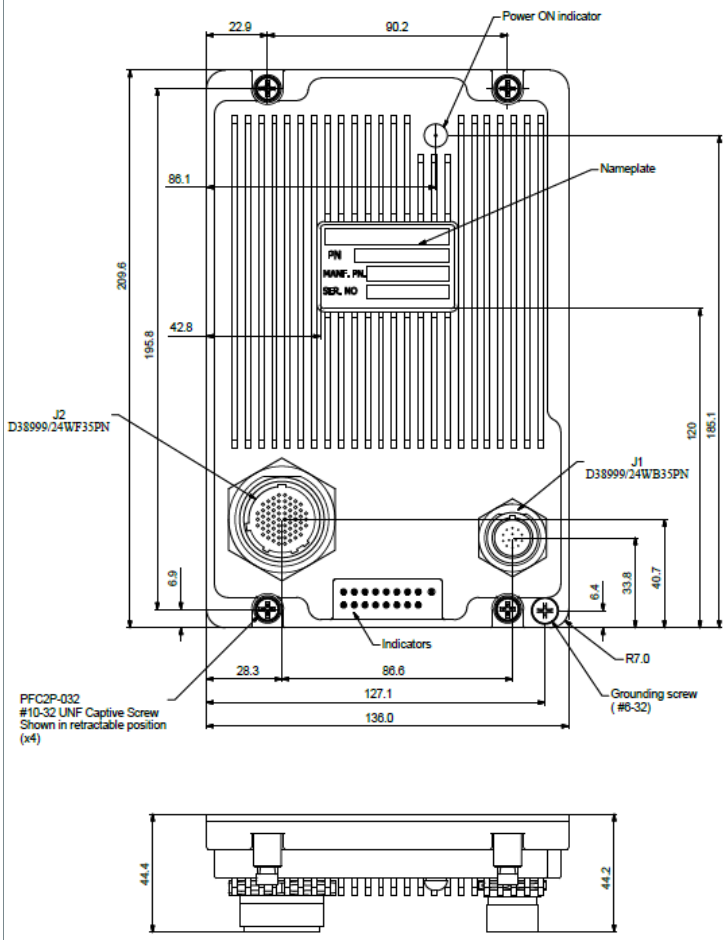

Part number		Description
	RESMLAC 8MG CAPS F35	• Managed military grade Gigabit switch • 8 x 10/100/1000TX

▶ For accessories, please consult us.

Amphenol

RESMLAC-28MG

Managed military Ethernet switch - 24 Gigabit + 4 combo 10G ports

Military ethernet switch for harsh environment - Fully MIL-STD compliant

NEW

The RESMLAC-28MG is a MIL-STD Fully managed Military-grade network switch offering 24 triple speed (10/100/1000) ports + 4 x 10G fiber ports.
The RESMLAC-28MG is compatible with all the newest military industry network protocols for redundant link topology, security, multi-cast and management requirements.

Developed specifically for military and harsh mobile applications, the RESMLAC-28MG features mechanical packaging enhancements designed for MIL-STD-810F airborne and ground environmental compliance and high reliability. The unit has been especially hardened to improve ingress, impact, and shock/vibration protection, as well as eliminate all moving parts through passive cooling, and interface through sealed MIL-D-38999 circular connectors and SCE.

Leveraging best-in-class switching technology, the RESMLAC-28MG serves as a robust COTS solution for providing local area network (LAN) connectivity to IP-enabled computing and net-centric devices. Compact in size, the RESMLAC-28MG is particularly useful for expanding port density to tactical IP routers in space-constrained airborne and ground vehicle environments.

Military applications

- Data acquisition & transmission
- Battlefield communication C4ISR
- Rugged Networks
- Mobile communications
- Combat vehicles
- Avionic & shipboard systems

Features

- **Ethernet ports**
  - Managed 24 x switched 10/100/1000 ports (including 4 Combo ports) + 4x10Gbps Fiber ports - Total of 28 ports.
  - The 4 Combo ports provide alternative 4 ports 100/1000Base-FX ports
- **Networking**

General

- Wire-speed hardware-based 28 ports gigabit ethernet switch
- Multicasting (IGMP Snooping), GARP, GMRP, MLD and GVRP
- Multicast groups up to 8K for both IPv4 and IPv6
- Broadcasting and flooding control up to 8K groups
- 802.1q tagged based VLAN up to 4K VLAN groups
- Link Aggregation 802.3ad, up to 16 members in group
- Link Aggregation mechanism based on L2/ L3/ L4 parameters
- Jumbo Frame support up to 10K
- WEB, CLI, Telnet Management

Quality of service

- QoS Multi-Layer Classifier: 802.1p, EtherType, VLAN-ID, IPv4/ 6 DSCP/ ToS, and UDP/TCP ports & ranges traffic classification
- Per port WFQ and Strict Queuing scheduling
- DSCP remarking for both IPv4 and IPv6 frames
- Ingress policer and ingress shaper per port with 500Kbps granularity
- Egress shaper per port with 500Kbps granularity
- Full-duplex flow control (IEEE802.3X) and half-duplex backpressure, symmetric and asymmetric.

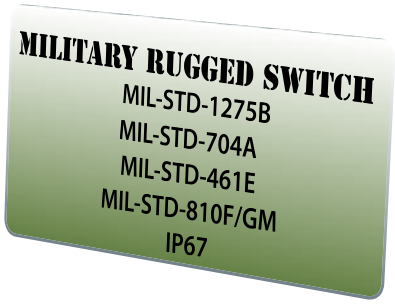

...

Security

- Security via Radius authentication 802.1x, Port/MAC access control
- Port security
- Per port ingress and egress port mirroring
- Mirroring per VLAN and per content awareness match
- Private VLAN support per VLAN (Isolated and Promiscuous ports)
- Content Aware Policers:
  - 128 Content Aware Policers
  - 16 Content Aware rate policers with rates from 1fps to 32 million fps
  - 8 UDP/TCP port range policers
  - Advanced ACL through hardware based match patterns
  - Content Aware Policers for generic MAC, ARP, IPv4, IPv6 protocols
  - No restriction on any mix of entries to Content Aware Policers
  - Contente Aware Policers actions are permit/deny, police, count, snoop and mirror
  - Special support for IP fragments, UDP/TCP port ranges and ARP
  - Extensive CPU DoS prevention
  - Surveillance functions by Content Aware Policers counters
  - Multiple ACLs per port for optimal usage of Content Aware Policers
- Storm controllers for flooded broadcast, multicast and unicast

Redundancy and ring protection

- Spanning tree (802.1d), RSTP (802.1w) and multiple Spanning tree (802.1S) for fast recovery rings
- RPR for up to 30 units per ring with recovery time <50ms hardware based
- RPR for up to 30 units per ring with recovery time <50ms hardware
- 20-Gbps bandwidth for ring topology
- QoS consistency across stack / ring
- Mirroring across stack / ring
- Link aggregation groups spanning multiple switches in stack/ring

Connectors

- 2 x Power connector type: MIL-DTL-38999/24WC4P (1 optional)
- 24 x LAN connector type: SCE2-B-76A07-14SN-001 (4 ports are Gigabit Combo ports - 10/100/1000 or 1000FX fiber)
- 4 x LAN Fiber connectors type: MIL-D-38999 TVOP
- 1 x Serial interface, shared with LAN port #1
- LED indication per Port (Speed, Link/Activity) per Unit (Power A, Power B)

Dimensional line drawing

All measurements are in millimeters

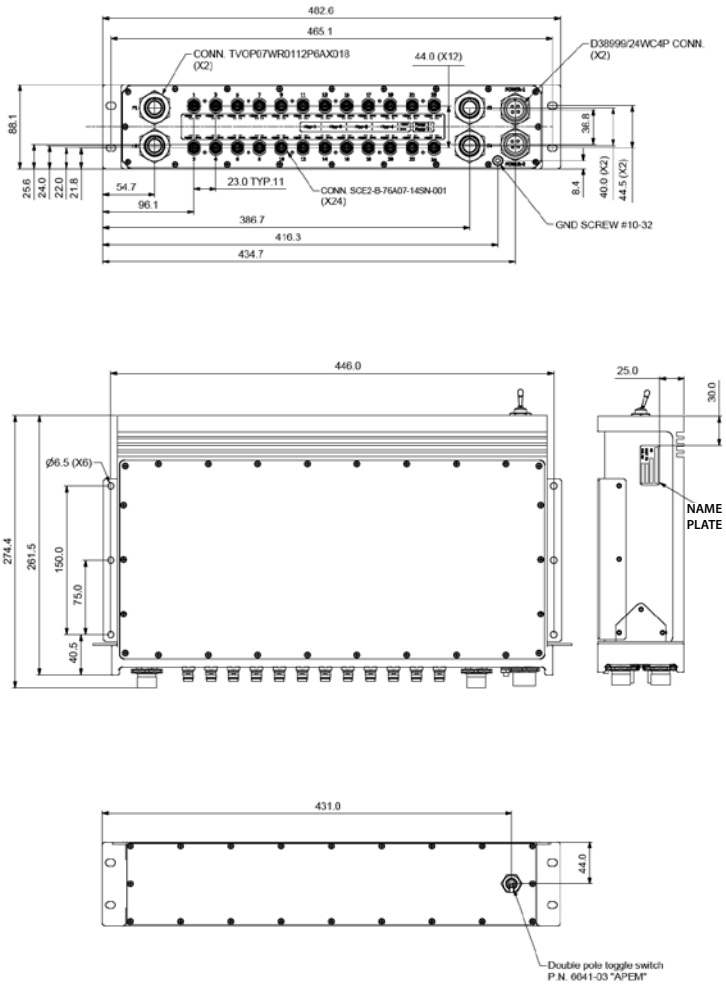

Amphenol

- **Chassis**
  - Low profile rugged aluminium extrusion
  - Conductively cooled w/custom internal heat-sinks
  - Ingress protection against sand, dust and moisture
  - Anodize coating, MIL-A-8625, Type II, Class 2
- **Standards**
  - MIL-STD-1275B, MIL-STD-704A, MIL-STD-461E, MIL-STD-810F GM, IP67
  - Support up to 50ms holdup time, and 6VDC drops
- **Voltage operation**
  - Redundant with load sharing Power Supplies 24VDC, 48VDC, or 90~230VAC
- **Performance**
  - 96.8 Mbps wire speed forwarding rate
  - 56 Gbps maximum forwarding bandwidth
  - 8K MAC address
- **Power**
  - Exceed MIL-STD-1275B and MIL-STD-704A Surge and Spike protection with 50ms holdup time and 6VDC drops
  - Voltage input: 24Vdc nominal (18-32V), option for redundant Power supply, 48VDC, and 90~230VAC
  - Power consumption: 20W typical
  - Chassis grounding
- **Electromagnetic**
  - MIL-STD-461E Electromagnetic compatibility
  - CE-102, CS-114, CS-115, CS-116, RE-102, RS-103
- **Shock / Vibration / Humidity**
  - MIL-STD-810F, 501.4I, 501.4II, 502.4I, 502.4II, 507.4, 500.4II, 514, 516I, 516VI, 514.5, 512.4
- **Physical**
  - Dimensions: 440mm (L) x 200mm (W) x 88(H), including connectors & hardware, 2U, 19" rack
  - Weight: 5.6 kg
- **Installation**
  - Set of four 4.5mm mounting holes on bottom for mounting to any flat surface
  - 19" standard mounting ears
- **Cooling**
  - No moving parts. Passive cooling.
- **Operating temp**
  - -35°C to +75°C (-31°F to +167°F) / -35°C cold start-up
- **Storage temp**
  - -45°C to +85°C (-49°F to +185°F)

		Description
Part number	**RESMLAC 28MG**	• Managed military grade Gigabit switch • → 24 x 10/100/1000TX
	Options	*Consult us for options such as additional ports 4 x Up to 10G Fiber ports*

▶ **For accessories, please consult us.**

RJSML-8US1 & RJSML-8UG1

Unmanaged military Ethernet switch - Fast or Gigabit

Military ethernet switch for harsh environment with industrial EMI compliancy

Sealed, rugged & unmanaged switch

Amphenol offers an unmanaged Ethernet switch with 8 gigabit ports RJSML-8UG1.
The switch can withstand a variety of extreme conditions. Whatever the situation - high temperatures, extreme shocks & vibrations, dust particles or even liquid immersion- there is a solution available.

The switch electronics are sealed within a waterproof IP68 metallic enclosure.
The conductive cadmium plating is suitable for most demanding EMI-RFI environments. Black paint is also offered when RoHS is required (other colors available).
The I/O interface includes redundant power inputs as well as waterproof rugged RJ45 connectors from the RJFTV FIELD threaded product series based on MIL-DTL-38999 (Series III) metallic shell size 19. This serie enables the transformation without tooling of any standard RJ45 cordset into a robust and waterproof connection system.

Military applications

- Battlefield communication C4ISR
- Rugged Networks
- Mobile communications
- Avionic & shipboard systems

Key features

- **Rugged environmental feature**
  - Rugged metal packaging with cadmium or paint protection
  - Mil-DTL-38999 III connectors for both power and Ethernet ports
  - IP65/IP68 rated when mated
  - Power filtering and protection (-704 option)
    - MIL- STD-461E (CE03) 600V spike suppressor
    - MIL- STD-704A
    - MIL- STD-1275A
    - RT CA/DO- 160B
  - MIL-STD-810F shocks
  - RTCA/DO- 160C Vibrations
  - Full-Duplex operation with flow control (no collisions!)
  - MIL STD 810F altitude 50,000 ft (15,000 m)
  - Auto-detecting, auto-crossover and auto-polarity
  - Broadcast storm protection
- **Models 8US1**
  - 8 ports 10/100-BaseT(X)
  - Wide operating temperature range of –40°C to 70°C
- **Models 8UG1**
  - 8 ports 10/100/1000-BaseT(X)
  - Wide operating temperature range of –10°C to 60°C
  - Supports Jumbo frame transmission up to 9kbytes
- **Models 8UG1-ET**
  - 8 ports 10/100/1000-BaseT(X)
  - Wide operating temperature range of –40°C to 70°C
  - Supports Jumbo frame transmission up to 9kbytes

IEEE Ethernet standards

Models	Features	802.3/u	802.3x	802.3ab
RJS XX 8US1 XX	Unmanaged - Fast	●	●	X
RJS XX 8UG1 XX	Unmanaged - Gigabit	●	●	●

IEEE 802.3/u	10 Mbps & 100 Mbps fast Ethernet
IEEE 802.3x	Full-Duplex with flow control
IEEE 802.3ab	1000 Mbps Gigabit Ethernet

Ethernet features

RJ45 Ports	8 shielded RJ45 ports 10/100 BaseT(X) or 1000 Base T(X)
Connectors for RJ45 ports	RJFTV: jam nut receptacle based on MIL-DTL-38999 III Olive drab cadmium or nickel plated
RJ45 speed	10, 100 or 1000 Mbps auto -negotiation
Full / Half duplex	Automatic
MDI/MDIX	Auto-crossover

Environmental specifications

Safety	UL 60950-1, CAN/CSA-C22.2 No.60950
EMI emissions	U.S.A.: FCC Part 15 CISPR 22 U.E. EN55011, EN61000-6-4, EN55022 Class A, EN61000-3-2/3, EN55024, IEC61000-4-2/3/4/5/6/8, EN61000-6-2
Shocks	MIL-STD-810F: 40g, 11 ms, 18 saw tooth shocks
Vibrations	RTCA/DO-160C sinusoidal vibrations 5-55 Hz: 0.01 inch: 55-500 Hz : 1.5 g
Altitude	MIL-STD-810F: 50.000 ft - 15.000 m
Temperature	Operating models 8UG1: -10°C to +60°C models 8US1: -40°C to +70°C models 8UG1-ET: -40°C to + 70°C Storage all models: -40°C to +85°C
Weight	approx 2.8 kg

Power supply

Input voltage	8US1, 8UG1, & 8UG1-ET: 12-48 VDC, redundant power input (P1 and P2) 8US1-704 & 8UG1-704: 12-33 VDC, single power input (P1 only) 8US1-PSM & 8UG1-PSM: 85-264 VAC single power input
Input power	5 W max
Connectors for power	MIL-DTL-38999 III jam nut receptacle, olive drab cadmium or nickel plated 1 connector TVx07xx0935P: 6 cts # 22D (wire 0.38 mm^2 maxi)
"OK" contact output	Sourcing power ; maximum current: 1 A @ 24VDC Not available for -704 and -PSM options

Additional power protection for models MG7F3G-704 (option-704)	
MIL-STD-461E	CE102 conducted emission
DEF-STAN-59-41	DCE01/DCE02
DEF-STAN-61-5	Pt 6
MIL-STD-704A	600V input transient, applied for 10us
MIL-STD-1275A	Spikes: +/- 250 V for 100us Surges: 100 V for 50 ms at 0.5 mohm Ripple: 14VAC pk-pk

Description

1. IP68 aluminium enclosure with cadmium conductive plating or black paint (RoHS)
2. Redundant power inputs
3. Balance pressure vent
4. 8 rugged IP68 RJF TV Ethernet ports
5. Fixture for vertical mounting

Optional caps available

IMPORTANT NOTE
This model has no LED indicator.

Description (in mm)

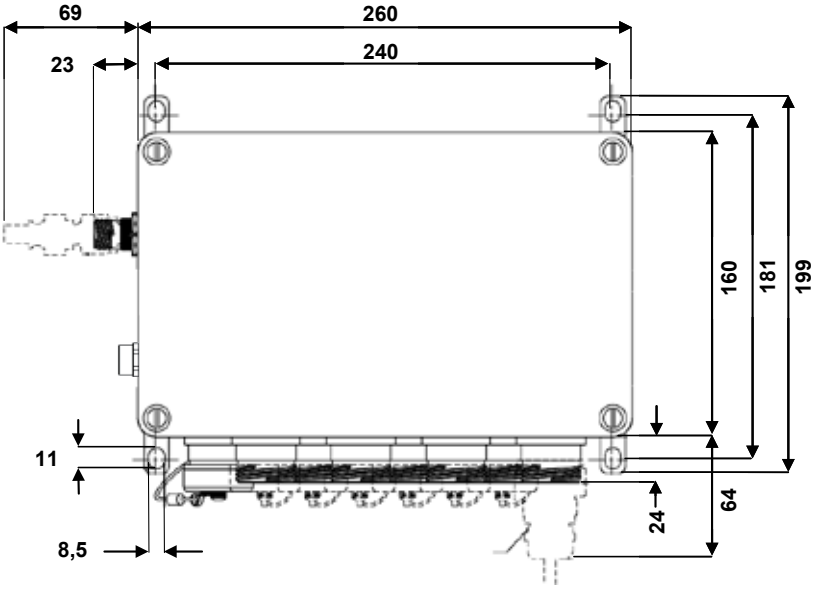

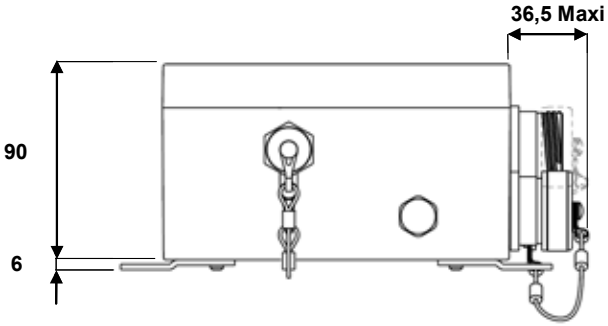

Pin-out for the power connector

OK (3&6)

8US1, 8UG1, & 8UG1-ET
P1 and/or P2: 12-48 VDC

8US1-704 & 8UG1-704
P1: 12-33VDC
3, 4, 5, 6: not connected

8US1-PSM & 8UG1-PSM
L: 85-264 VAC
3, 4, 5, 6: not connected

Part number code

Series	RJS	ML	8US1	-	-	-

Type of Enclosure
ML: MIL-DTL-38999 (series III) Receptacles, OD Cadmium Plating
BKN: RAL 9005 (Jet black) Paint on Aluminium box, Nickel plated 38999 (series III) Receptacles, ROHS compliant

Type of Electronics
8US1: unmanaged 8 ports 10/100 Base T(X), wide temperature range
8UG1: unmanaged 8 ports 10/100/1000 Base T(X)
8UG1-ET: unmanaged 8 ports 10/100/1000 Base T(X), wide temperature range

Optional: transient suppression module; 600V spike suppressor
(Blank): no transient suppression module
704: switch equiped with additional transient suppression module

Optional: AC power supply
(Blank): DC powered
PSM: switch powered with 85-264 VAC instead of DC power

Optional: Caps for receptacles fixed with cord directly to the receptacle
(Blank): no caps included. The Ethernet ports are still sealed but the contacts are not protected.
CAPS: attached caps for both power and data included

Example: RJS ML 8UG1 704 CAPS: unmanaged switch in an aluminum enclosure with olive drab green conductive cadmium plating, 8 gigabit ports, RJFTV threaded coupling receptacles, additional transient suppression module, caps are added to the switch

Remark: All BKN Ethernet switches and nickel plated accessories are RoHs compliants.
-704- and –PSM- options can not be selected together.
With the -704- option, a filter module is included inside the switch allowing to meet MIL-STD-461 and other aircraft standards.
With the -CAPS- option, all the receptacles come pre-equipped with a cap.

Accessories

Plugs for Ethernet ports
RJF TV 6 M G: cadmium OD plating
RJF TV 6 M N: nickel plating
Based on MIL-DTL-38999
No tool required !!!

Caps for Ethernet ports
RJSML C7G: cadmium OD plating
RJSML C7N: nickel plating
A simple screwdriver is needed!

Plugs for I/O ports:
MIL-DTL-38999,
cadmium plated, crimp contacts
Two plugs (6 cts # 22D)
TV 06 RW 0935 S: cadmium OD plating
TV S06 RF 0935 S: nickel plating

Backshells for I/O plugs
We suggest to use MIL-DTL-38999 III backshells.
Consult the dedicated catalog (E118) for details.
Examples:
TVNSA 09 014 : shielding backshell, cadmium OD plating
TVNSA 09 023: shielding backshell, nickel plating
+ 804221 straight heat shrink for sealing

Example: RJS ML 8UG1 704 CAPS with an RJSML 8UG1 704 CAPS switch, we suggest to use hereafter accessories:
RJF TV 6 M G (up to 8) for Ethernet ports
TV 06 RW 0935 S + TVNSA 09 014 + 804221 for power port

RJSML-MG7F3G

Managed military Ethernet switch - 7 fast ports + 3 Gigabit ports

Military ethernet switch for harsh environment with industrial EMI compliancy

Sealed, rugged & managed switch

Amphenol offers a 10 ports managed Ethernet switch RJSML-MG-7F3G.
Note: this model replaces the RJSML-9MG1 and the RJSML-9RG1.
The switch can withstand a variety of extreme conditions: whatever the situation - high temperatures, extreme shocks and vibrations, dust particles or even liquid immersion there is a solution available.

The switch electronics are sealed within a waterproof IP68 metallic enclosure.
The conductive cadmium plating is suitable for most demanding EMI-RFI environments. Black paint is also offered when RoHs is required (others colors available).
The I/O interface includes redundant power inputs as well as waterproof rugged RJ45 connectors from the RJF TV FIELD threaded product series based on MIL-DTL-38999 (Series III) metallic shell size 19.
This serie enables the transformation without tooling of any standard RJ45 cordset into a robust and waterproof connection system.

Military applications

- Data acquisition & transmission
- Battlefield communication C4ISR
- Rugged Networks
- Mobile communications
- Test equipment
- Avionic & shipboard systems

Key features

- **Rugged environmental feature**
  - Rugged metal packaging with cadmium or paint protection
  - Mil-DTL-38999 III connectors for both power and Ethernet ports
  - IP65/IP68 rated when mated
  - Power filtering and protection (-704 option)
    - MIL-STD-461E (CE03) 600V spike suppressior
    - MIL-STD-704A
    - MIL-STD-1275A
    - RTCA/DO-160B
  - MIL-STD-810F shocks
  - RTCA/DO- 160C Vibrations
  - Wide operating temperature range of -40°C to 70°C
  - MIL-STD-810F Altitude 50,000 ft 15,000 m
- **Ethernet features**
  - 3 ports 10/100/1000-BaseT(X) + 7 ports 10/100-BaseT(X)
  - Full-Duplex operation with flow control (no collisions!)
  - Auto-detecting, auto-crossover and auto-polarity
  - MIL-STD-810F shocks
  - RSTP for redundant rings
  - QoS and CoS priority queuing
  - SNMPv3 authentication and encryption
  - IGMP for multicast filtering
  - VLAN for trafic segregation
  - And much more !

IEEE Ethernet standards

Models	Features	802.3/u	802.3x	802.3z	802.1p	802.1D	802.1w	802.1Q
RJS XX MG 7F3G XX	Managed - Gigabit	●	●	●	●	●	●	●

IEEE 802.3/u	10 Mbps & 100 Mbps fast Ethernet	IEEE 802.1p	Priority queuing - QoS, CoS, ToS/DS
IEEE 802.3x	Full-Duplex with flow control	IEEE 802.1D/w	Rapid spanning tree for redundant rings
IEEE 802.3ab	1000 Mbps Gigabit Ethernet	IEEE 802.1Q	VLAN for traffic segregation

Ethernet features

RJ45 ports	10 shields RJ45 ports 10/100 BaseT(X) or 1000 Base T(X)
Connectors for RJ45 ports	RJFTV: jam nut receptacle based on MIL-DTL-38999 III Olive drab cadmium or Nickel plated
RJ45 speed	10 or 100 Mbps auto -negotiation
Typical latency	16 us + frame time @ 10 Mbps (varies on load and settings) 5 us + frame time @ 100 Mbps
Full / Half Duplex	Automatic or configurable
RJ45 MDI/MDIX	Auto-crossover
RJ45 TD and RD polarity	Auto-polarity
MAC addresses supported	8192
Memory bandwidth	32 Gbps (gigabit) ; 3.2 Gbps for all other models
Ethernet isolation	1500 Vrms 1 minute
Ring features	Link loss recovery time: 30 ms plus 5 ms per hop
(for Ring model only)	Maximum switches in ring: 50+ Dual Ring support

Environmental specifications

EMI emissions	EN55022 class A, FCC part 15, IC ES-003
EMC immunity	IEC61326-1, IEEE C37.90
Shocks	MIL-STD-810F: 40g, 11ms, 18 saw tooth shocks
Vibrations	RTCA/DO-160C sinusoidal vibrations 5-55 Hz: 0.01 inch ; 55-500 Hz: 1.5 g
Altitude	MIL-STD-810F: 50.000 ft - 15.000 m
Temperature	Operating -40°C to +70°C Storage -40°C to +85°C

Weight

approx 2.8 kg

Power supply

Input voltage	MG7F3G: 10-30 VDC, redundant power input (P1 and P2) MG7F3G-704: 10-30 VDC, single power input (P1 only) MG7F3G-PSM: single power input AC or DC - AC voltage: 85-264 VAC/Frequency 47-63 Hz - DC voltage: 120-370 VDC
Input power	5 W typical (all ports active)
Connectors for power	MIL-DTL-38999 III jam nut receptacle, olive drab cadmium or nickel plated 1 connector TVx07xx0935P: 6 cts # 22D (wire 0.4 mm^2 maxi)
"OK" contact output	Sourcing power ; Maximum current : 0.5 A MG7F3G: ON if P1 and P2 have power and switch software is running MG7F3G-704: ON when software is running MG7F3G-PSM: ON when software is running; output power: 24VDC

Additional power protection for models MG7F3G-704 (option-704)	
MIL-STD-461E	CE102 Conducted emission
DEF-STAN-59-41	DCE01/DCE02
DEF-STAN-61-5	Pt 6
MIL-STD-704A	600V input transient, applied for 10us
MIL-STD-1275A	Spikes: +/- 250 V for 100us Surges: 100 V for 50 ms at 0.5 mohm Ripple: 14VAC pk-pk

Description

1. IP68 aluminium enclosure with cadmium conductive plating or black paint (RoHS)
2. Redundant power inputs
3. Balance pressure vent
4. 10 rugged IP68 RJF TV Ethernet ports
5. Fixture for vertical mounting
6. Optional caps available

IMPORTANT NOTE

This model has no LED indicator.
Management is done through a web browser

Description (in mm)

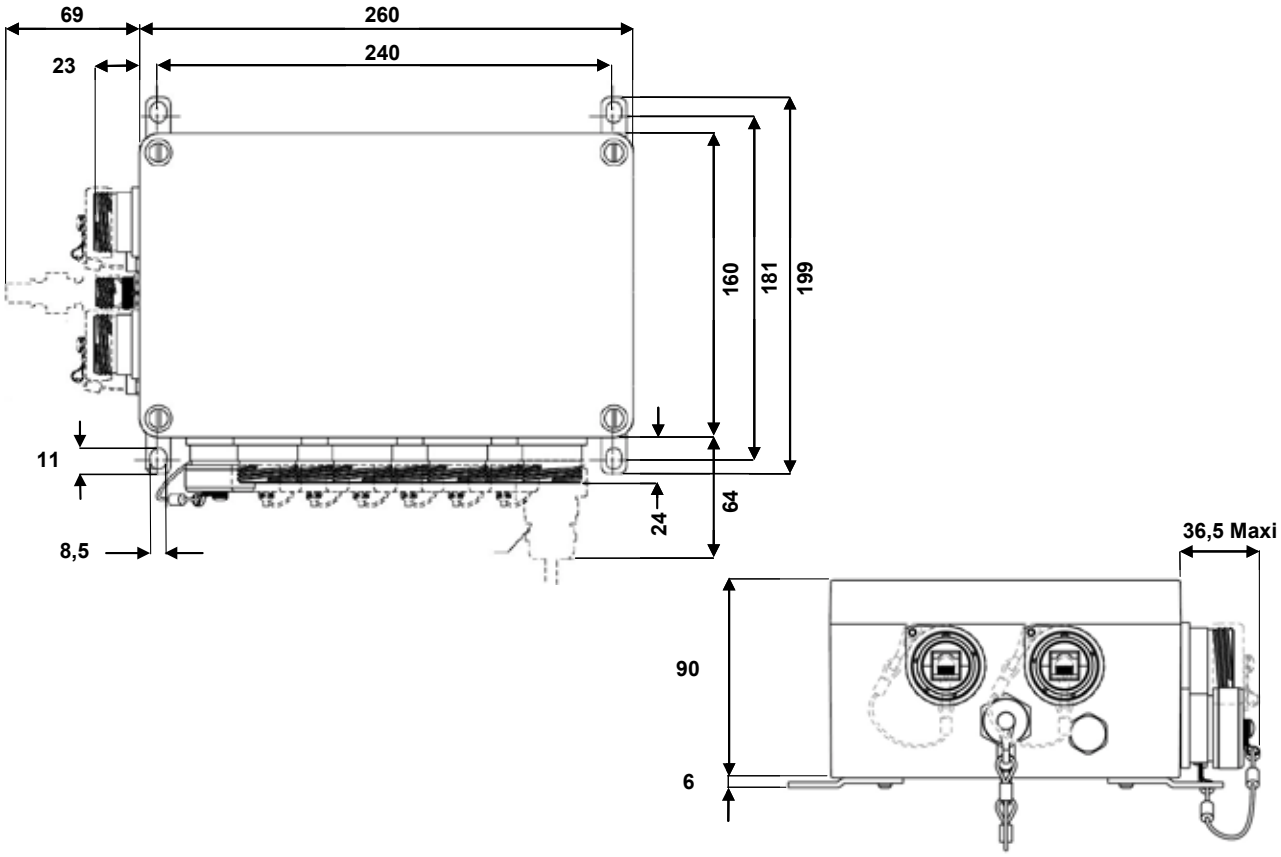

Pin-out for the power connector

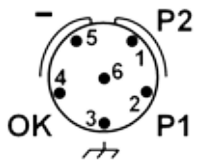

MG7F3G
P1 and/or P2: 10-30 VDC

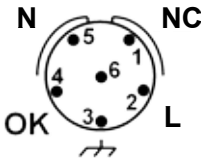

MG7F3G-PSM
L: 85-264 VAC
NC: Not connected

Part number code

Series	RJS	ML	MG7F3G	-	-	-

Type of Enclosure
ML: MIL-DTL-38999 (series III) receptacles, OD Cadmium plating
BKN: RAL 9005 (jet black) paint on aluminium box, nickel plated 38999 (series III) receptacles, ROHS compliant

Type of Electronics
MG7F3G: managed 6 ports 10/100 Base T(X) + 3 ports 10/100/1000 Base T(X)

Optional: transient suppression module; 600V spike suppressor
(Blank): no transient suppression module
704: switch equiped with additional transient suppression module

Optional: AC power supply
(Blank): DC powered
PSM: switch powered with 85-264 VAC instead of DC power

Optional: Caps for receptacles fixed with cord directly to the receptacle
(Blank): no caps included. The Ethernet ports are still sealed but the contacts are not protected.
CAPS: attached caps for both power and data included

Example: RJS ML MG7F3G 704 CAPS — Managed switch in an aluminium enclosure with olive drab green conductive cadmium plating, 7 ports 10/100 Base T(X) + 3 gigabit ports, RJF TV threaded coupling receptacles, additional transient suppression module, caps are added to the switch.

***Remark*:** **All BKN Ethernet switches and nickel plated accessories are RoHs compliants.**
704 and PSM options can not be selected together.
With the -704 option, a filter module is included inside the switch allowing to meet MIL-STD-461 and other aircraft stan dards.
With the –CAPS option, all the receptacles comes pre-equipped with a cap.

Accessories

Plugs for Ethernet ports
RJF TV 6 M G: cadmium OD plating
RJF TV 6 M N: nickel plating
Based on MIL-DTL-38999
No tool required !!!

Caps for Ethernet ports
RJSML C7G: cadmium OD plating
RJSML C7N: Nickel plating
A simple screwdriver is needed!

Plugs for I/O ports:
MIL-DTL-38999,
cadmium plated, crimp contacts
Two plugs (6 cts # 22D)
TV 06 RW 0935 S: cadmium OD plating
TV S06 RF 0935 S: nickel plating

Backshells for I/O plugs
We suggest to use MIL-DTL-38999 III backshells.
Consult the dedicated catalog (E118) for details.
Examples:
TVNSA 09 014 : shielding backshell, cadmium OD plating
TVNSA 09 023: shielding backshell, nickel plating + 804221 straight heat shrink for sealing

Example : RJS ML MG7F3G 704 CAPS — With a RJSML MG7F3G 704 CAPS switch, we suggest to use hereafter accessories :
RJF TV 6 M G (up to 10) for Ethernet ports
TV 06 RW 0935S + TVNSA 09 014 + 804221 for power ports

RJSPC

Unmanaged or ring industrial Ethernet switch - 5 fast ports

Industrial ethernet switch for harsh environment

Rugged & waterproof switch

Amphenol offers a small size 5 ports waterproof Ethernet switch that can withstand a variety of extreme conditions - low & high temperatures, shocks & vibrations, dust particles or even liquid immersion.
This is an easy way to make the Ethernet networks of your manufacturing site, automation or control units deterministic.

Amphenol IP68 industrial ring switch

Amphenol IP68 ring Ethernet switch is a combination of very fast, fault-tolerant network redundancy Sixnet technology and IP68 sealed & rugged packaging, specifically designed for the harshest environments.
Rings self-configure and just run, without any complex configuration.
The switch board is sealed within a waterproof IP68 polyester enclosure suitable for highly corrosive environments.
The polyester material is glass fiber reinforced. This makes it very rugged against shocks and vibration.
The I/O interfaces are waterproof & rugged RJ45 connectors from the RJ FIELD plastic circular series.

Industrial applications

- Factory automation
- Robotics
- Process control
- Transportation systems
- Data acquisition & transmission

Key features

- Ring switch networking features (managed features available!)
  - Real-Time ring for ultra-fast fault-tolerant loops
    - recovery time of 30 ms + 5 ms per hop!
  - Modbus monitoring over Ethernet
    - ideal for deterministic systems and PLCs
  - Real-time traffic prioritization (QoS and CoS)
    - assure delivery of real-time data
    - improve network utilization
    - user settable priority assignments
  - Advanced switch features
    - user configurable port settings
    - port mirroring for traffic diagnostics
    - pre-configurable for Plug-And-Play simplicity

Note: for ATEX version, see page 138.

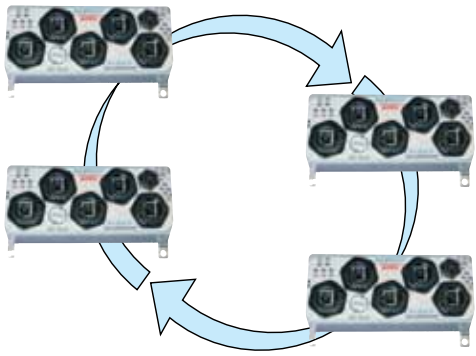

1. LEDs indicating activity, link status, datarate (10/100 Mbps)
2. LED indicating ring status
3. 5 rugged IP68 RJ Field Ethernet ports
4. Real-time ring feature
5. IP68 polyester enclosure reinforced with glass fiber
6. OK power & ring status
7. LEDs indicating power
8. Redundant power inputs
9. OK contact output

IP68 UNMANAGED & RING SWITCH FEATURES

IEEE Ethernet standards

IEEE 802.3	10 Mbps Ethernet
IEEE 802.3u	100 Mbps Fast Ethernet
IEEE 802.3x	Full-Duplex with Flow Control
IEEE 802.1p standard	QoS/CoS - Quality/Class of service for ring model only

Regulatory approvals

EMI emissions	EN55022, FCC part 15, ICES-003
EMC immunity	IEC61326-1, IEEE C37.90
Shocks	IEC60068-2-27
Vibrations	IEC60068-2-6
Free Fall	IEC60068-2-32

Ethernet features

Ports	5 shielded RJ45 ports 10/100BaseTX
Ethernet switch type	Intelligent store & forward
Full / Half Duplex	Configurable
RJ45 speed	10 or 100 Mbps auto-negotiation
RJ45 MDI/MDIX	Auto-crossover connection
RJ45 TD and RD polarity	Auto-polarity
Typical latency	16 us + frame time @ 10 Mbps (varies on load and settings) 5 us + frame time @ 100 Mbps
MAC addresses supported	2048
Memory bandwidth	3.2 Gbps
Ethernet isolation	1500 Vrms 1 minute
Ring features	Link loss recovery time: 30 ms plus 5 ms per hop
(for Ring model only)	Maximum switches in ring: 50+ Dual ring support

Power supply

Input power (typical)	ES: 2,4 W ; RS: 2,7 W
Redundant inputs	10-30 VDC; 10-50 VDC for EP models

Status reporting (for ring model only)

"OK" contact output	Output current: 0.5 A max
"OK" contact State	OFF when a fail occurs ON when power and switching is OK

Environmental

Operating temperature	- 40°C to +75°C
Storage temperature	- 40°C to +85°C

Weight	0.54 kg

Real-Time ring switches

Amphenol Real-Time ring switches combines the Plug&Play simplicity of an unmanaged switch with high performances of Sixnet Ring managed switches.

- Real-Time fault-tolerant Ring
  Recovery time of 30 ms + 5 ms per hop!
- Real-Time traffic prioritization (QoS & CoS)
  Assure delivery of real-time data
- Available Managed features
  User configurable port settings
  Port mirroring for traffic diagnostics
  Pre-configurable for Plug & Play simplicity

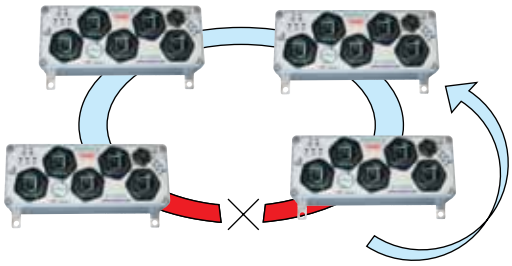

The use of such switches provides a fast network and avoids faults. When a break occurs, the switch instantly transfers data to new path. The link loss recovery is 30 ms plus 5 ms times the number of Ring switches in the ring. For example, 10 ring switches will recover in less than 80 ms. Rings can be pre-configured to "just run". They don't need an assigned IP address. But if you like, you can fine tune the performance of the ring by using a simple Windows wizard (which is free).
Ring networks can be divided into multiple "sub-rings" which enhance reliability and recovery speed through small ring paths.

The prioritization of messages assures delivery of real-time data. Some applications need to force no-real-time data (such as video information) to lower priority and force critical real-time data at higher priority. Network utilization is improved.

This combination of Ethernet technology associated with rugged and sealed protective enclosure is the ideal solution to deliver deterministic performance to your industrial systems even in the harshest environment!

Dimensions (mm/inch)

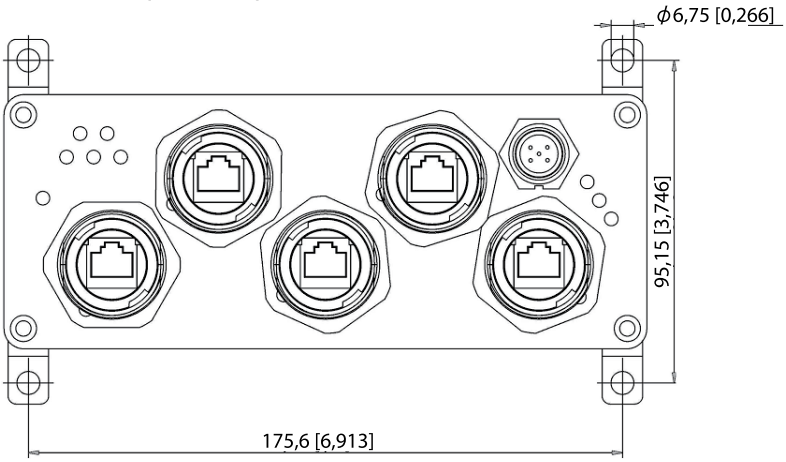

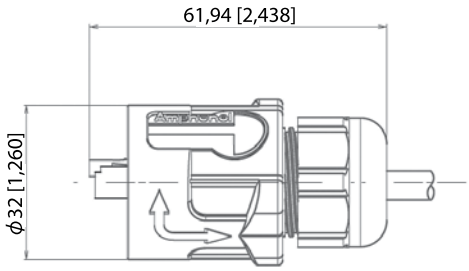

Accessory: Plugs for RJ45 ports

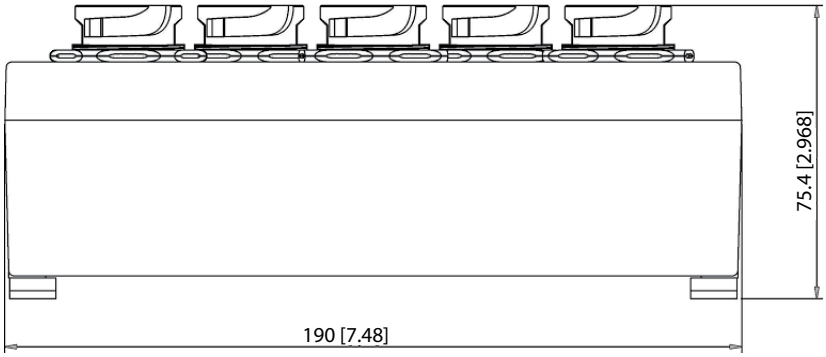

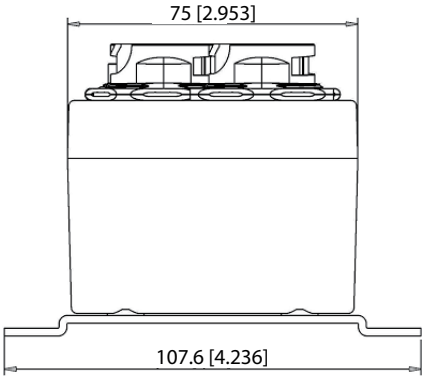

Part number code

Series IP68 RJ-Switch, with polyester body	**RJS-PC**	**5ES**	**1**
Type of electronics **5RS**: 5 ports 10/100 Mbps, Ring switch **5ES**: 5 ports 10/100 Mbps, Unmanaged switch			
Connectors **1**: RJ45 ports, 10/100BaseT(X) **1CAPS**: caps are attached on both power and data receptacles			
Military rated protection Blank: Industrial protection (standard order) **EP**: extended power protection exceeds MIL-STD-1275 (special order)			

Example: IP68 Ethernet ring switch, 5 ports 10/ 100 Mbps, with caps attached on the receptacles: RJS-PC-5RS-1CAPS

Note: the Ring model is pre-set for 1 ring enabled on the ports 4 and 5. You may change the configuration by using the free windows configuration tool. Simply choose the desired pair of ports for your new enabled ring.

FREE WINDOWS CONFIGURATION TOOL
Download it at **www.rjswitch.com**

Accessories

■ P/N: **RJF PC5 PWR**
Plug for power port
Sealing protection: IP68

■ P/N: **RJF RB 6**
Plug for RJ45 ports
Sealing protection: IP68

Rugged USB Solutions

NEW USB3.0 & USB2.0

Field installable

Table of contents

NEW **USB3.0**

USB3FTV (USB-A) 86
USB3F TV - Transversally sealed receptacles 90
USB3F TV - Hermetic receptacles 93
USB3 receptacle with Self Closing Cap 94
Metallic Self Closing Cap (SCC) for USB3F TV square flange receptacles 95
High reliability USB 3.0 cordsets 96

USB2.0

USBFTV (USB-A) 97
USBF TV - Transversally sealed receptacles 100
USBF TV Hermetic receptacles 102
USBFTV - Receptacles with 360° EMI backshells 103
USBF TV Through bulkhead 104
USBF TV Stand off receptacles 105
USBF TV 2.0 receptacle with Self Closing Cap (SCC) 107
Metallic Self Closing Cap (SCC) for USBF TV square flange receptacles 108
High reliability USB 2.0 cordsets 109
USBF SC - Quick release series 110
USBBF TV (USB-B) 112
USBBF TV Stand off receptacles 115
USBBF TV - Transversally sealed receptacles 117
USBB receptacle with Self Closing Cap 118
Metallic Self Closing Cap (SCC) for USBB square flange receptacles 119
Special USB adaptor for Military & Commercial Aeronautics 120

USB3F TV *(USB-A)*

USB connection system for harsh environment

NEW USB3.0

ROHS COMPLIANT N & BZ

With USB Field, you can insert a standard USB 3.0 cordset into a metallic plug which will protect it from shocks, dust and fluids.
No hazardous on-field cabling and grounding!
Also available a version including plug + cordset: see next page.

This metallic plug is connected into a receptacle, using a Tri Start Thread coupling mechanism (MIL-DTL-38999 series III type) with anti-decoupling device for high vibrations.

Applications

- Embedded computers
- Data acquisition and transmission in harsh environment
- Railways
- Battelfield communication systems
- Navy systems

Data transmission

USB specification 3.0
Data rate: up to 5Gb/s for high speed USB

Dataspeed 10 x higher than USB2.0

Main characteristics

- Sealed against fluids and dusts (IP68)
- Shock, vibration and traction resistant
- No cabling operation in field and no tools required
- Improved EMI protection
- Tri Start Thread coupling mechanism (MIL-DTL-38999 series III type) with anti-decoupling device - Shell size 15
- 2 mechanical coding / polarization possibilities (receptacle insert rotation)
- USB3F TV plug retention in the receptacle: 100 N in the axis
- Mating cycles: 500 minimum

Environmental protection

- Sealing (when mated): IP68 (temporary immersion)
- Salt spray: 48 h with nickel plating
  > 500 h with olive drab cadmium
  500 h with marine bronze shell
- Fire retardant / low smoke: UL94 V0 and NF F 16 101 & 16 102
- Vibrations: 10 – 500 Hz, 10 g, 3 axes: no discontinuity > 1micro s
- Shocks: IK06: weight of 250 g drop from 40 cm [15.75 in] onto connectors (mated pair)
- Humidity: 21 days, 43°C, 98% humidity
- Temperature range: - 40°C / +85°C

Part number code: plug and receptacles without cordset.

Series USB3 Field TV	USB3F TV	2	A	G
Shell type **6:** plug (without cordset) - *For cordset solution, see page 88.* **2:** square flange receptacle with female USB3.0 termination - *For cordset solution, see page 90.* **7:** jam nut receptacle with female USB3.0 termination - *For cordset solution, see page 90.*				
Coding (for receptacle only) **A** or **B**				
Shells material & finish **G:** aluminium shell - olive drab cadmium plating **N:** aluminium shell - nickel plating - *ROHS compliant*				

Examples: - *plug, olive drab cadmium plating:* ***USB3F TV 6 G***
- *jam nut receptacle, coding B, nickel plating:* ***USB3F TV 7 B N***

Plug without cordset

- Shell type 6

Part number type: **USB3 FTV 6 x**
***Nota**: assembling instructions on page 89*

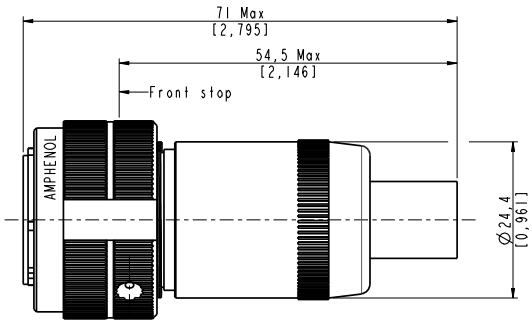

Receptacles

■ Square flange receptacle
4 mounting holes - Shell type 2
Part number type: **USB3 FTV 2 x**

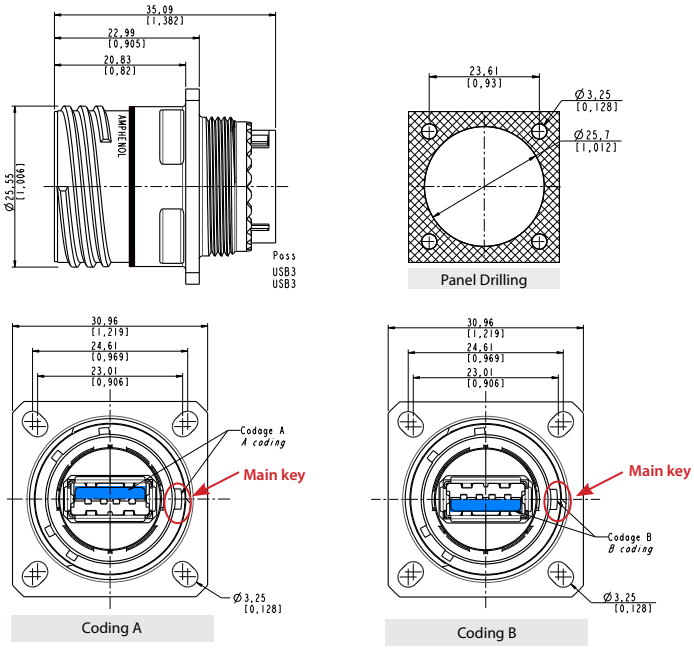

■ Jam nut receptacle
Hexagonal nut mounting - Shell type 7
Part number type: **USB3 FTV 7 x**

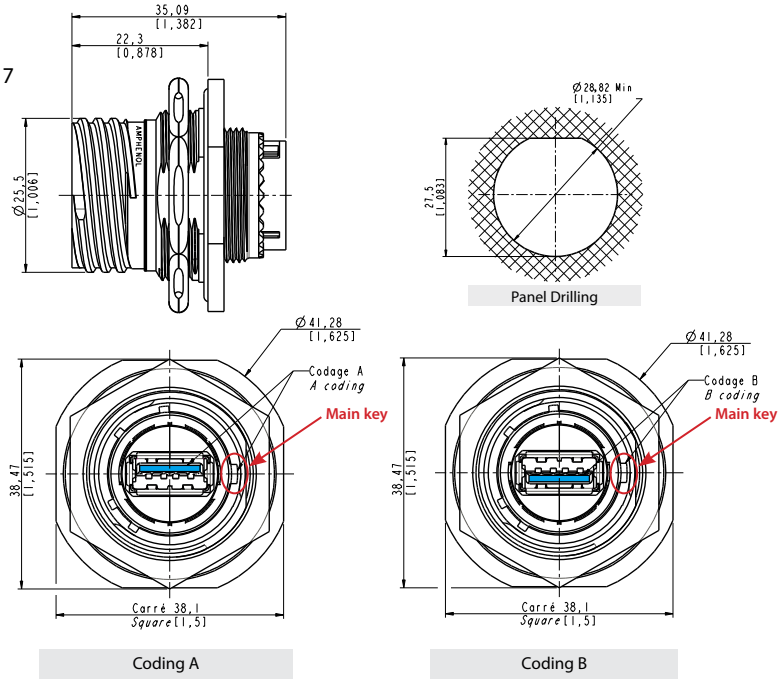

Configuration use

For PC to peripheral application, use a crossed USB3 cable
« **CROS** » type in the part number code

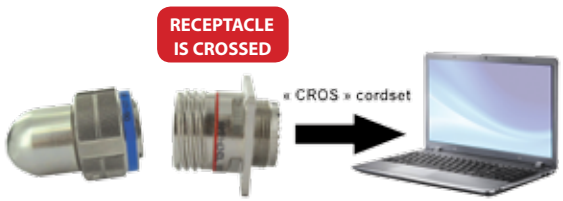

For PC to PC application, use a straight USB3 cable
« **STR** » type in the part number code

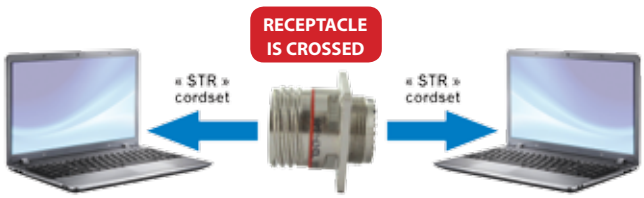

Part number code: plugs with cordset.

Series USB3 Field TV	USB3F TV	6	A	03	G	STR
Shell type **6:** plug (with cordset)						
Coding **A** or **B**						
Cordset length **03:** 0.3 m [11.81 inches] **10:** 1 m [39.37 inches] **05:** 0.5 m [19.68 inches] **15:** 1.5 m [59.05 inches]						
Shells material & finish **G:** aluminium shell - olive drab cadmium plating **N:** aluminium shell - nickel plating - *ROHS compliant*						
Type of cable * **CROS:** high reliability USB3 cable crossed **STR:** high reliability USB3 cable straight **OPEN:** high reliabilty USB3 cable open ⇨ *no plug at the end'*						

*** IMPORTANT NOTE**
- for PC to PC application, use a "**CROS**" type of cable
- for PC to peripheral application, use a "**STR**" type of cable

*See **Configuration use** on page 87*

Examples: *- plug, coding B, with 0.5m length of high reliability USB3 cable crossed, nickel plating:* ***USB3F TV 6 B 05 N CROS***
- plug, coding A, with 1m length of high reliability USB3 cable straight, olive drab plating: ***USB3F TV 6 A 10 G STR***
- plug, coding B, with 0.3m length of high reliability USB3 OPEN, nickel plating: ***USB3F TV 6 B 03 N OPEN***

Plug with reinforced USB3.0 cordset

■ Shell type 6

Part number type: **USB3 FTV 6 x xx x CROS**
USB3 FTV 6 x xx x STR

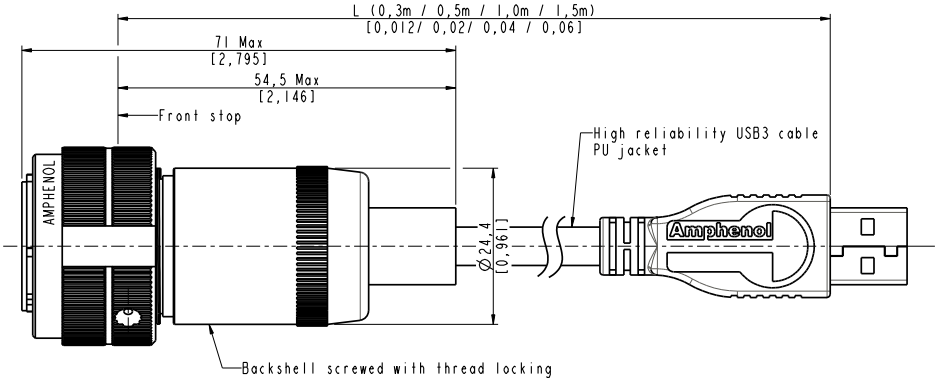

Plug with open reinforced USB3.0 cable

■ Shell type 6

Part number type: **USB3 FTV 6 x xx x OPEN**

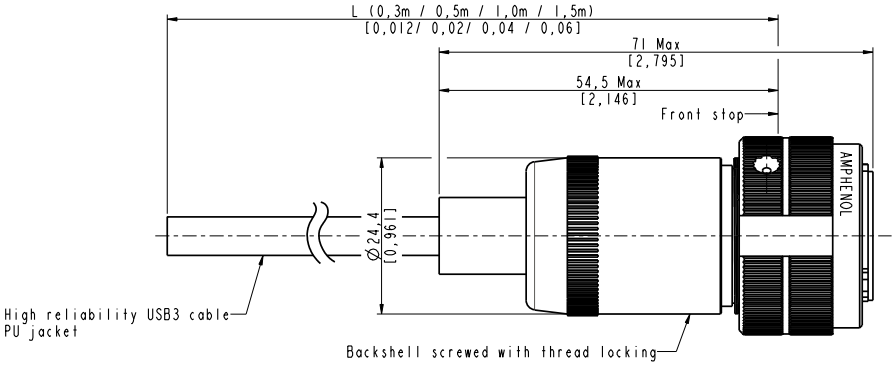

2 codings available for plugs

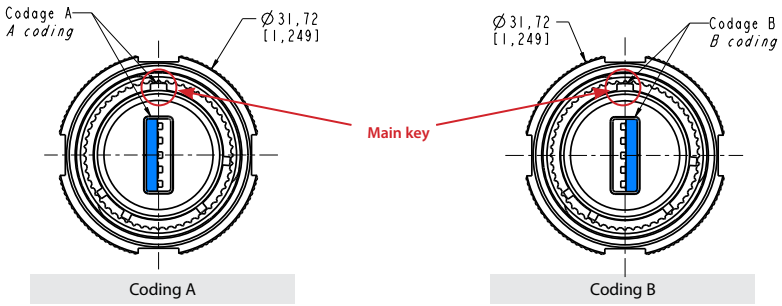

Amphenol

Assembly instructions

Can be used with most the USB3.0 cordset brands : No tools required!

Plug assembly

1. Insert the USB3 cordset into the metallic backshell
2. Insert the retention spacer laterally to the cable (this spacer is soft, in order to adapt to different shapes of overmolding) and slide the overmolding of the USB3-A plug into this retention spacer
3. Insert the friction ring laterally to the cable
4. Choose the right coding (2 positions) and insert the USB-A plug into the protective plug.Note at this step, the main key is used for polarization through the blue seal.

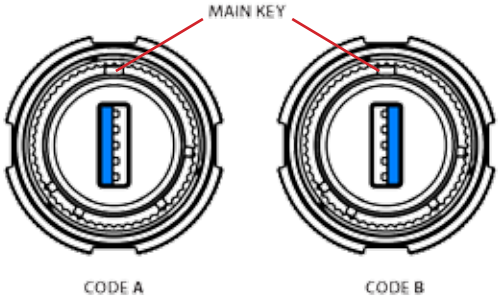

7. Screw the backshell on the plug body. A wrench can be necessary to fully tighten it, and the connection to the receptacle can help

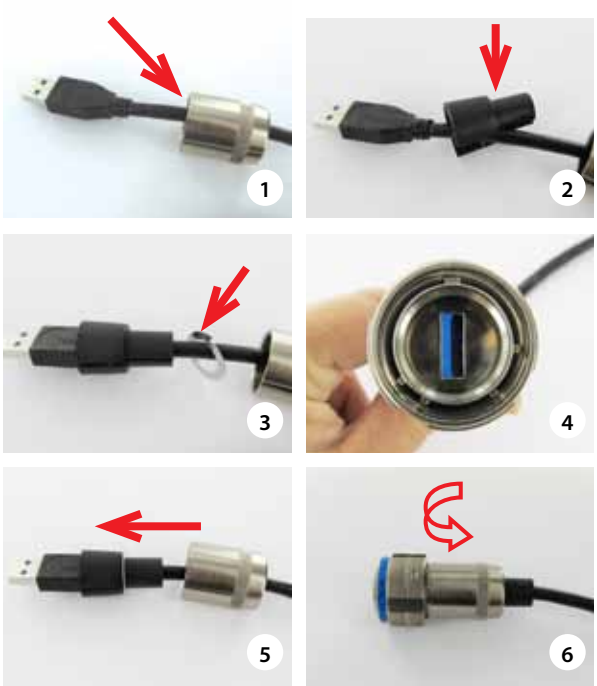

IMPORTANT NOTE
The sealing is done by the blue seal.

USB3 cordset usable - *Not provided*

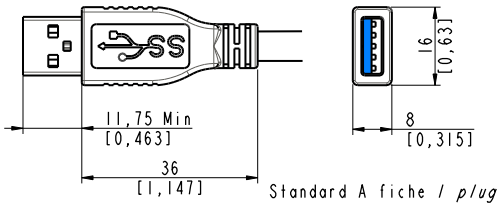

Accessories

■ **Metallic caps**

	USBF TVC	2	G
Connector type **6:** plug **2:** square flange receptacle **7:** jam nut eceptacle			
Shells material & finish **N:** aluminium shell - nickel - *ROHS compliant* **G:** aluminium shell - olive drab cadmium **BZ:** marine bronze shell - *ROHS compliant*			

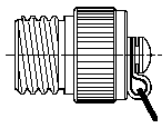

Plug Cap

Receptacle Cap

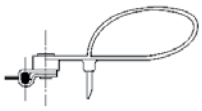

Plug Cap end

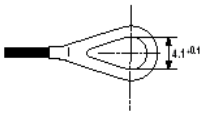

Square flange receptacle cap end

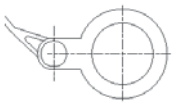

Jam Nut receptacle cap end

■ Panel gasket for square flange receptacle
Thickness: 0,8 mm [.031]
P/n: **JE15**

USB3F TV *(USB-A)*

Transversally sealed receptacles

NEW USB3.0

ROHS COMPLIANT N & BZ

In some applications, a transversal sealing for the receptacle is a « must ». This will prevent fluids and dust from going through the receptacle when plug or cap are not mated to the receptacle. The sealed solution (version "S") has a compound at the rear of the receptacle below. In addition, the Sealed USB3F TV has been successfully tested in very high vibration corresponding to airplane applications.

Main characteristics

- Sealed against fluids and dusts (IP68)
- Shock, vibration and traction resistant
- No cabling operation in field and no tools required
- Improved EMI protection
- Tri Start Thread coupling mechanism (MIL-DTL-38999 series III type) with anti-decoupling device - Shell size 15
- 2 mechanical coding/polarization possibilities by the user (receptacle insert rotation)
- USB3F TV plug retention in the receptacle: 100 N in the axis
- Mating cycles: 500 minimum

Environmental protection

- Sealing (when mated): IP68 (temporary immersion)
- Salt spray: 48 h with nickel plating
  > 500 h with olive drab cadmium
  500 h with marine bronze shell
- Fire retardant / Low smoke: UL94 V0 and NF F 16 101 & 16 102
- Vibrations: 10 – 500 Hz, 10 g, 3 axes: no discontinuity > 1micro s
- Shocks: IK06 ▸ weight of 250 g drop from 40 cm [15.75 in] onto connectors (mated pair)
- Humidity: 21 days, 43°C, 98% humidity
- Temperature range: - 40°C / +85°C

Applications

- Embedded computers
- Data acquisition and transmission in harsh environment
- Railways
- Battelfield communication systems
- Navy systems

Data transmission

USB specification 3.0
Data rate: up to 5Gb/s for high speed USB

Part number code

Series USB3 Field TV	USB3F TV	2 S	A	03	G	STR
Shell type **2S:** square flange receptacle **7S:** jam nut receptacle						
Coding **A** or **B**						
USB cable length **03:** 0.3 m [11.81 inches] **05:** 0.5 m [19.68 inches] **10:** 1 m [39.37 inches] **15:** 1.5 m [59.05 inches]						
Shells material & finish **G:** aluminium shell - olive drab cadmium plating **N:** aluminium shell - nickel plating - *ROHS compliant*						
Type of cable * **ACROS:** high reliability crossed USB3 cable with plug at the end **ASTR:** high reliability straight USB3 cable with plug at the end **OPEN:** high reliability cable open = no plug at the end						

*** IMPORTANT NOTE**
- for PC to PC application, use a "**CROS**" type of cable
- for PC to peripheral application, use a "**STR**" type of cable

*See **Configuration use** on page 87*

Examples:
- *square flange receptacle, with 0.5m length of high reliability USB3 cable crossed, coding B, nickel plating:* ***USB3F TV 2 S B 05 N CROS***
- *jam nut receptacle, with 1m length of high reliability USB3 cable straight, coding A, olive drab cadmium plating:* ***USB3F TV 7 S A 10 G STR***
- *jam nut receptacle, with 0.3m length of high reliability USB3 cable open, coding B, olive drab cadmium plating:* ***USB3F TV 7 S B 03 G OPEN***

Receptacles with USB-A cordset

■ Square flange receptacle

4 mounting holes: shell type 2

Part number: **USB3 FTV 2 S x xx x CROS**

USB3 FTV 2 S x xx x STR

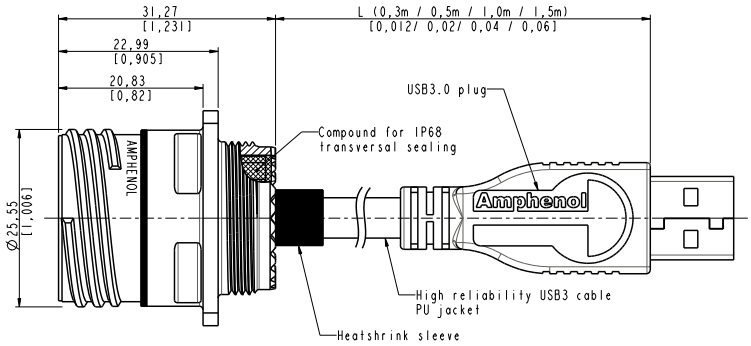

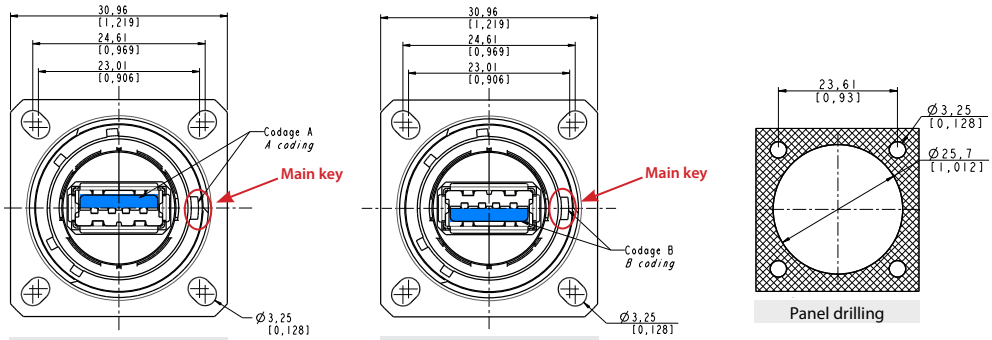

Coding A

Coding B

Panel drilling

■ Jam nut receptacle hexagonal nut mounting: shell type 7

Part number: **USB3 FTV 7 S x xx x CROS**

USB3 FTV 7 S x xx x STR

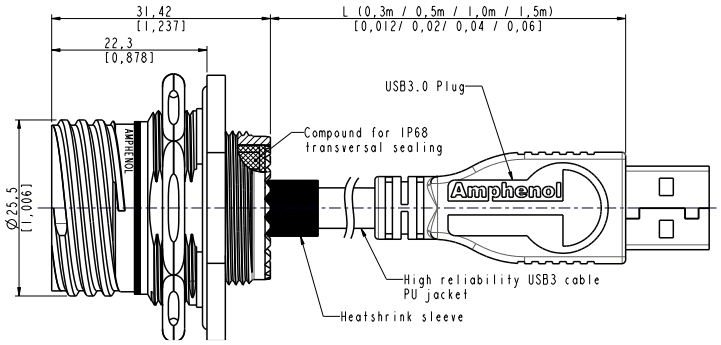

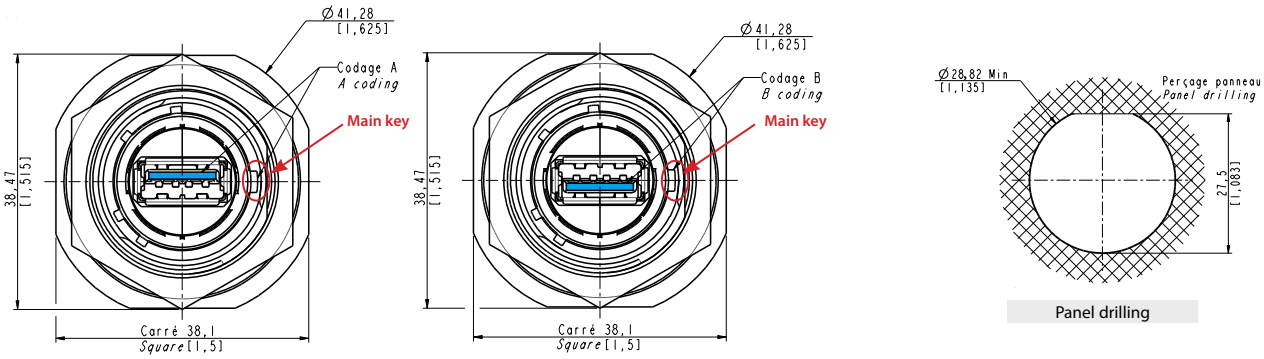

Coding A

Coding B

Panel drilling

Receptacles with open reinforced USB3.0 cable

■ Square flange receptacle - 4 mounting holes: shell type 2

Part number type: **USB3F TV 2 S A xx x OPEN**

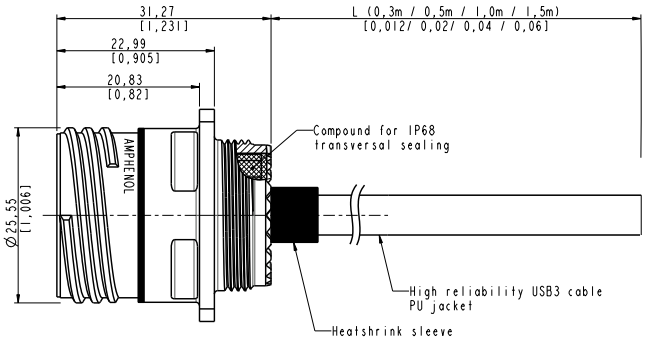

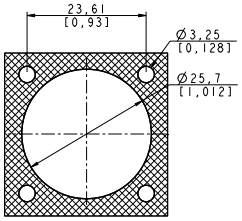

Panel drilling

■ Jam nut receptacle hexagonal nut mounting: shell type 7

Part number type: **USB3F TV 7 S A xx x OPEN**

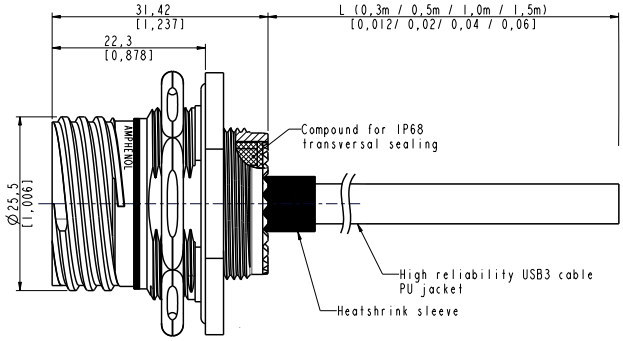

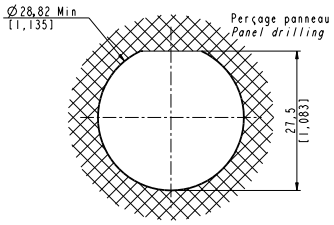

Panel drilling

Amphenol

USB3F TV

Hermetic receptacles

NEW

ROHS COMPLIANT N & BZ

In some applications, a transversal hermiticity for the receptacle is a « must ». This will prevent gas from going through the receptacle when plug or cap are not mated to the receptacle.
The hermetic solution (version "H") has a compound at the rear of the receptacle. Helium leakage is less than 1.10^{-6} cm^3 per second [0.1 micron cubit ft per hour] at one bar [15 psi] pressure differential.

Applications

- Embedded computers
- Data acquisition and transmission in harsh environment
- Railways
- Battelfield communication systems
- Navy systems

Data transmission

USB specification 3.0
Data rate: up to 5Gb/s for high speed USB

Main characteristics

- Same as the USB3F TV (see page 76)... a complete IP68 sealing of the receptacle is added (even with no plug or no protective cap mated).
- Outside dimensions are the same as the standard USB3F TV (USB-A).
- Vibrations : the compounded version of the USBF TV has been tested in vibration following the NAS 1599 aeronautic specification (ambient temperature):
5 - 3000 Hz, 20g, 2.5 mm [.1 inch] double amplitude, 3 axes, 12 hours
Note: this specification exceeds MIL-C-26500 requirements.

IMPORTANT NOTE

Due to the compound, the coding of the connector must be done in the factory: use the codes A or B in the part number.
Example: USBF3TV 2H **A** 2 N 03 A

Coding A

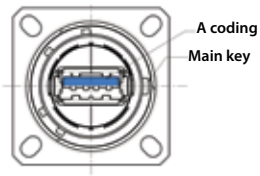

Coding B

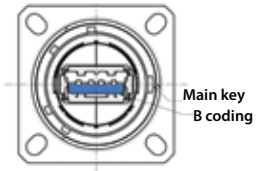

Same for jam nut receptacle.

Part number code

Series USB3 Field TV	USB3F TV	2 H	A	03	G	STR
Shell type **2H:** square flange receptacle **7H:** jam nut receptacle						
Coding **A** or **B**						
USB cable length **03:** 0.3 m [11.81 inches] **05:** 0.5 m [19.68 inches] **10:** 1 m [39.37 inches] **15:** 1.5 m [59.05 inches]						
Shells material & finish **G:** aluminium shell - olive drab cadmium plating **N:** aluminium shell - nickel plating - *ROHS compliant*						
Type of cable * **ACROS:** high reliability crossed USB3 cable with plug at the end **ASTR:** high reliability straight USB3 cable with plug at the end **OPEN:** high reliability cable open = no plug at the end						

*** IMPORTANT NOTE**
- for PC to PC application, use a "**CROS**" type of cable
- for PC to peripheral application, use a "**STR**" type of cable

*See **Configuration use** on page 87*

Examples:
- square flange receptacle, with 0.5m length of high reliability USB3 cable crossed, coding B, nickel plating: ***USB3F TV 2 H B 05 N CROS***
- jam nut receptacle, with 1m length of high reliability USB3 cable straight, coding A, ODC plating: ***USB3F TV 7 H A 10 G STR***
- jam nut receptacle, with 0.3m length of high reliability USB3 cable open, coding B, ODC plating: ***USB3F TV 7 H B 03 G OPEN***

Amphenol

USB3 Receptacle with Self Closing Cap

NEW

ROHS COMPLIANT N & B

This Self Closing Cap automatically protects the USB3 square flange receptacles (MIL-C-26482 type), protecting your system from dust and water projections.
The same cap can be used to protect RJ45, USB2.0, USB-B and IEEE1394 receptacles. A spring automatically closes the upper part of the cap when either the RJ Field plug, RJ45 cordset, USB or IEEE1394 cordset, or USB key are removed from the receptacle.

USB3F 21 X SCC

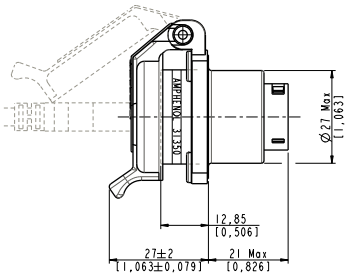

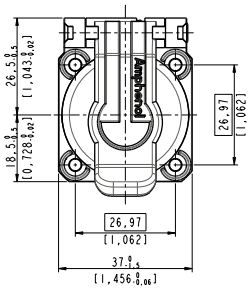

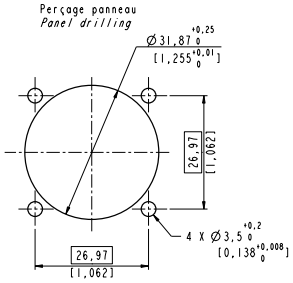

Version: USB-A *(front and back termination)*

		Plating	Metallized inserts (EMI)
Part number *	**USB3F 2B SCC**	Black coated	No
	USB3F 2N SCC	Nickel plated	Yes
	USB3F 2G SCC	Olive drab cadmium plated	Yes

* The part number includes the receptacle + the self closing cap

■ **Note**: Panel gasket with any of these receptacles: **JE18**

RJF 21 X SCC, USBF 21 X SCC, USBBF 21 X SCC, & IEEE1394

RJ45 version

(see page 25)

USB2.0-A version

(see page 107)

USB-B version

(see page 118)

IEEE1394 version

(see page 143)

Metallic Self Closing Cap (SCC)

For USB3F TV square flange receptacles.

This Self Closing cap automatically protects the USB3F TV (type A) square flange receptacles (MIL-DTL-38999 type), protecting your system from dust and water projection.
A spring automatically closes the upper part of the cap when the USB plug is removed from the receptacle.

Sealing level IP67

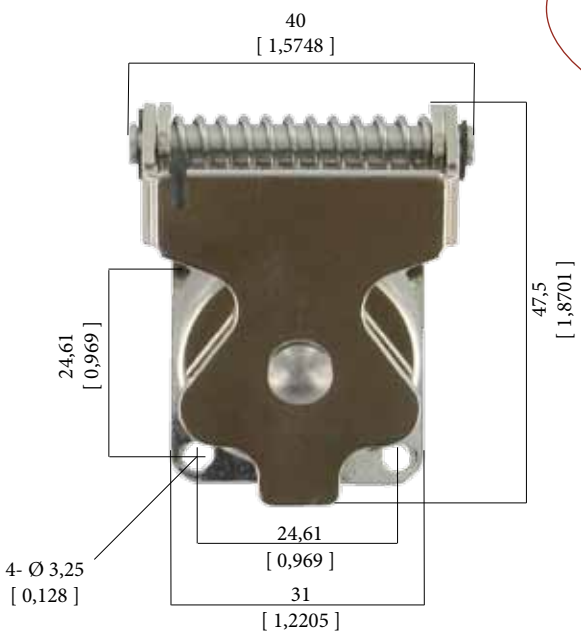

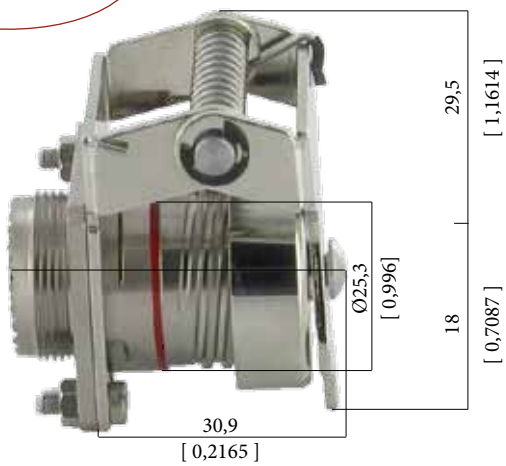

IMPORTANT NOTE
Metal Self Closing caps are sold separately (without receptacle).

	Plating	P/N
Part number	Black - *ROHS compliant*	**USBFTVSCCB**
	Nickel - *ROHS compliant*	**USBFTVSCCN**
	Olive drab cadmium	**USBFTVSCCG**

Remark: also compatible with USBFTV 2.0 (type A) & USBBFTV (type B) square flange receptacles.
USBFTV2XX *(see page 106)*
USBBFTV2XX *(see page 110)*

■ **Panel gasket for square flange receptacle (thickness: 0,8 mm [.031]):**

Part number: JE15

Amphenol

High Reliability USB 3.0 Cordsets

NEW

ROHS COMPLIANT

General construction: this is a USB-3.0 cable containing two 28 AWG 90Ω USB3.0 parallel shielded pair, one 28 AWG USB2.0 pair, and two 24 AWG power conductors, overall SFTP shields (SFTP = double shielding, braid and foild), jacketed in black UV resistant Polyurethane HFFR*. Designed for fixed or portable applications in industrial and harsh environments.
*HFFR: Halogen Free Flame Retardant.

Jacket compound specification:
Halogen Free Flame Retardant Polyether-based Polyurethane. Glossy finish. Excellent hydrolysis resistance. High microbial resistance. UV resistant. High flexibility.

Applications

- Robotics
- Railways
- Battelfield communication
- Motion control
- CNC machines
- Industrial process

PHYSICAL CHARACTERISTICS

DATA CONDUCTORS	Tinned stranded copper, 7/0.13 mm nom (28 AWG)
DATA INSULATION	1 mm nom
COLOR DATA PAIR	Green & white (USB2.0) Yellow & blue, orange & violet (USB3.0)
POWER CONDUCTORS	Tinned copper, 7/0.2 mm (24 AWG)
POWER INSULATION	1.1 mm nom
COLOR POWER WIRE	Red & Black
SHIELDS	USB 3.0 pair: foil + stranded tinned copper drain wire. Overall: foil + shield braiding of tinner copper wires (coverage 85%).
JACKET	PU compound
COLOR JACKET	Black
WEIGHT	31 lbs/1000ft (46 kg/km)
OUTSIDE DIAM.	0.20 inch (5.7 mm nom. +/- 0.2)
MIN BEND RADIUS *(During operation)*	57 mm (10 x O. D.)
MIN BEND RADIUS *(During installation)*	28.5mm (5 x O.D.)
TEMPERATURE installation & operational	Plus 85°C, minus 40°C

ELECTRICAL CHARACTERISTICS

USB3.0 Parallel pair

Conductor resistance	≤ 210 Ohm/km
Insulation resistance	≥ 200 MOhm/km
Capacitance (1 kHz)	nom. 43 nF/km
Time delay	nom. 5.0 ns/m
Time delay skew	≤ 150 ps/10m
Operating voltage (peak)	≤ 100 V
Impedance	90 ±7 Ohm
Test voltage	500 V

USB2.0 Pair

Electrical requirements acc. to USB2.0	
Impedance	90 ±15 Ohm
Test voltage	500 V

Attenuation

USB3.0 pair-db/10m		USB2.0 pair-db/100m	
625 MHZ	10	**1 MHZ**	4
1250 MHZ	15	**4 MHZ**	7.8
2500 MHZ	25	**8 MHZ**	11.4
5000 MHZ	36	**12 MHZ**	13.4
7000 MHZ	47	**24 MHZ**	19
		48 MHZ	27
		96 MHZ	38
		200 MHZ	64
		400 MHZ	116

Datas for cable alone only (without USB plug)

IMPORTANT NOTE
⇨for PC to PC application, use a **CROSSED** cable
⇨for PC to peripheral application use a **STRAIGHT cable**
see page 87

CORDSETS WITH A USBA PLUG OVERMOLDED ON EACH END

	Length (m/ft)	**CROSSED** wiring part number *Black overmolding*	**STRAIGHT** wiring part number *Blue overmolding*
UNDER USB3 SPECIFICATION ≤1.8 M	0.5 m / 1.64 ft	USB 3 A A CROSSED 050 PU HFFR	USB 3 A A STRAIGHT 050 PU HFFR
	1 m / 3.28 ft	USB 3 A A CROSSED 100 PU HFFR	USB 3 A A STRAIGHT 100 PU HFFR
	1.5 m / 4.92 ft	USB 3 A A CROSSED 150 PU HFFR	USB 3 A A STRAIGHT 150 PU HFFR
	1.8 m / 5.91 ft	USB 3 A A CROSSED 180 PU HFFR	USB 3 A A STRAIGHT 180 PU HFFR
OUT OF USB3 SPECIFICATION >1.8 M	2 m / 6.56 ft	USB 3 A A CROSSED 200 PU HFFR	USB 3 A A STRAIGHT 200 PU HFFR
	2.5 m / 8.20 ft	USB 3 A A CROSSED 250 PU HFFR	USB 3 A A STRAIGHT 250 PU HFFR
	3 m / 9.84 ft	USB 3 A A CROSSED 300 PU HFFR	USB 3 A A STRAIGHT 300 PU HFFR
	3.5 m / 11.48 ft	USB 3 A A CROSSED 350 PU HFFR	USB 3 A A STRAIGHT 350 PU HFFR
	4 m / 13.12 ft	USB 3 A A CROSSED 400 PU HFFR	USB 3 A A STRAIGHT 400 PU HFFR
	4.5 m / 14.76 ft	USB 3 A A CROSSED 450 PU HFFR	USB 3 A A STRAIGHT 450 PU HFFR
	5 m / 16.40 ft	USB 3 A A CROSSED 500 PU HFFR	USB 3 A A STRAIGHT 500 PU HFFR

USBF TV *(USB-A)*

USB connection system for harsh environment

ROHS COMPLIANT N & BZ

With USB Field, you can insert a standard USB 2.0 cordset into a metallic plug which will protect it from shocks, dust and fluids.
No hazardous on-field cabling and grounding!

This metallic plug is connected into a receptacle, using a Tri Start Thread coupling mechanism (MIL-DTL-38999 series III type) with anti-decoupling device for high vibrations.

Applications

- Embedded computers
- Data acquisition and transmission in harsh environment
- Railways
- Battelfield communication systems
- Navy systems

Data transmission

USB specification 2.0
Data rate: up to 480 Mbps for high speed USB

Main characteristics

- Sealed against fluids and dusts (IP68)
- Shock, vibration and traction resistant
- No cabling operation in field and no tools required
- Improved EMI protection
- Tri Start Thread coupling mechanism (MIL-DTL-38999 series III type) with anti-decoupling device - Shell size 15
- 2 mechanical coding / polarization possibilities by the user (receptacle insert rotation)
- USBF TV plug retention in the receptacle: 100 N in the axis
- Mating cycles: 500 minimum

Environmental protection

- Sealing (when mated): IP68 (temporary immersion)
- Salt spray: 48 h with nickel plating
  > 500 h with olive drab cadmium
  1000 h with marine bronze shell
- Fire retardant / low smoke: UL94 V0 and NF F 16 101 & 16 102
- Vibrations: 10 – 500 Hz, 10 g, 3 axes: no discontinuity > 1micro s
- Shocks: IK06: weight of 250 g drop from 40 cm [15.75 in] onto connectors (mated pair)
- Humidity: 21 days, 43°C, 98% humidity
- Temperature range: - 40°C / +85°C

Part number code

Series **USB Field TV**	**USBF TV**	**2**	**1**	**G**
Shell type **6:** plug **2:** square flange receptacle **2PE:** square flange receptacle with metal backshell *(type 1)* & with metal backshell + plastic gland *(type 2)* **2PEM:** square flange receptacle with backshell + metal gland *(only for back termination type 2 = Solder)* **7:** jam nut receptacle **7PE:** jam nut receptacle with metal backshell *(type 1)* & with metal backshell + plastic gland *(type 2)* **7PEM:** jam nut receptacle with backshell + metal gland *(only for back termination type 2 = Solder)*				
Back terminations *(receptacles only)* **1:** female USB-A **2:** solder (4 tinned holes)				
Shells material & finish **N:** aluminium shell - nickel plating - *ROHS compliant* **G:** aluminium shell - olive drab cadmium plating **BZ:** marine bronze shell - *ROHS compliant*				

Examples:
- Olive drab cadmium plug: USBF TV 6G
- Olive drab cadmium square flange receptacle, USB-A back terminat°: USBF TV 21G
- Olive drab cadmium jam nut receptacle, USB-A receptacle back terminat°: USBF TV 71G
- Nickel jam nut receptacle, solder back termination: USBF TV 72N

Plug

■ Shell type 6

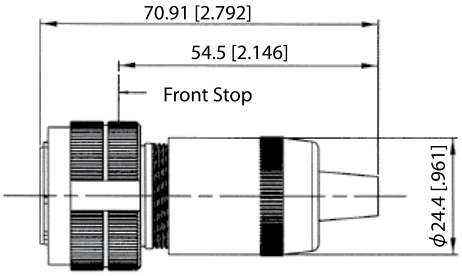

USBF TV 6 X

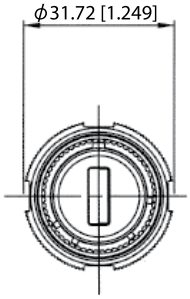

Receptacles

■ Square flange receptacle
4 mounting holes: shell type 2

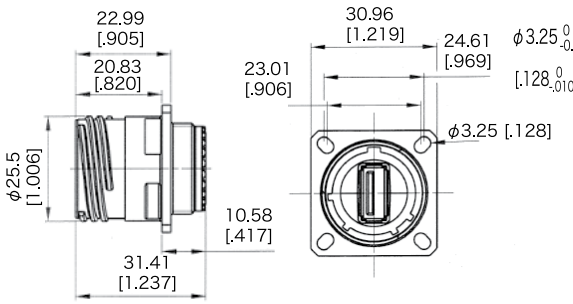

USBF TV 2 XX

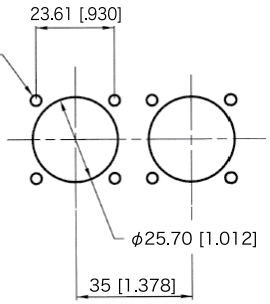

Panel Drilling

■ Jam nut receptacle
Hexagonal nut mounting: shell type 7

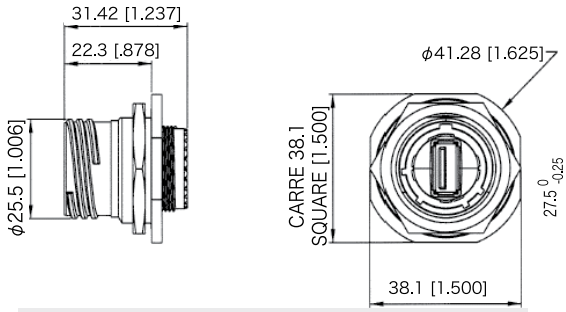

USBF TV 7 XX

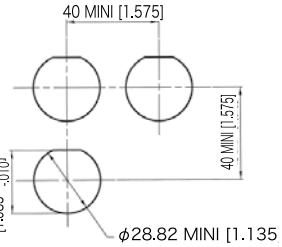

Panel Drilling

■ Receptacles with backshell:
Shell type 2PE and 7PE

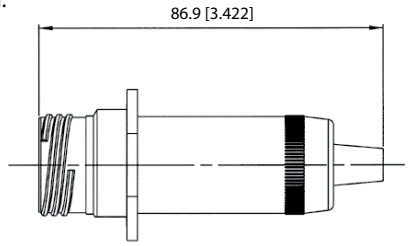

Backshell used with back termination type 1:
USB A receptacle (Not sealed)
Same panel drilling as USBFTV 2xx

USBF TV 2PE / 7PE-1

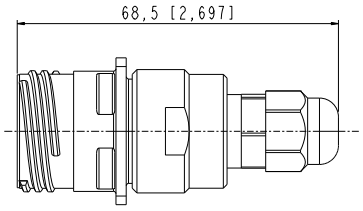

Backshell used with
back termination type 2:
Solder (Sealed – IP68)

USBF TV 2PE(M) / 7PE(M)-2

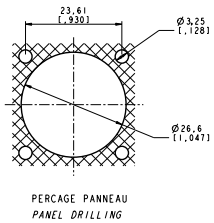

Panel Drilling *(for type 2 only)*

Back terminations

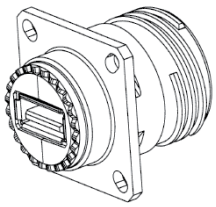

Type 1: female USB-A

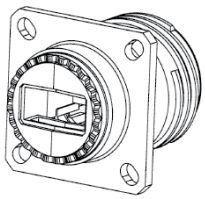

Type 2:
solder 4 Tinned holes to solder your cable

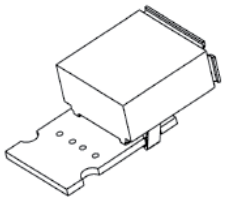

View of the PCB of the Type 2 version with
4 tinned holes for solder termination

Assembly instructions

Can be used with most the USB cordset brands : No tools required!

Plug assembly

1. Only if you need a full sealing (IP68): Install the white sticker around the plug, covering the 4 little holes of the overmolding
2. Insert the black O Ring around the front face of the USB A plug. This O Ring will ensure connection sealing
3. Insert the USB cordset into the metallic backshell
4. Insert the retention spacer laterally to the cable (this spacer is soft, in order to adapt to different shapes of overmolding) and slide the overmolding of the USB-A plug into this retention spacer
5. Insert the friction ring laterally to the cable
6. Choose the right coding (2 positions) and insert the USB-A plug into the protective plug. Note at this step, the main key is used for polarization.

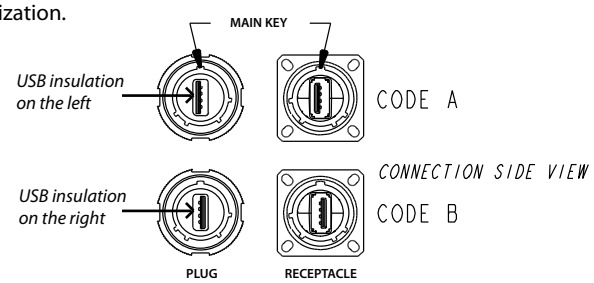

7. Screw the backshell on the plug body. A wrench can be necessary to fully tighten it, and the connection to the receptacle can help

IMPORTANT NOTE

The connection sealing is not done by the black retention spacer (which is sloted), but by the front face ORing (fig.2)

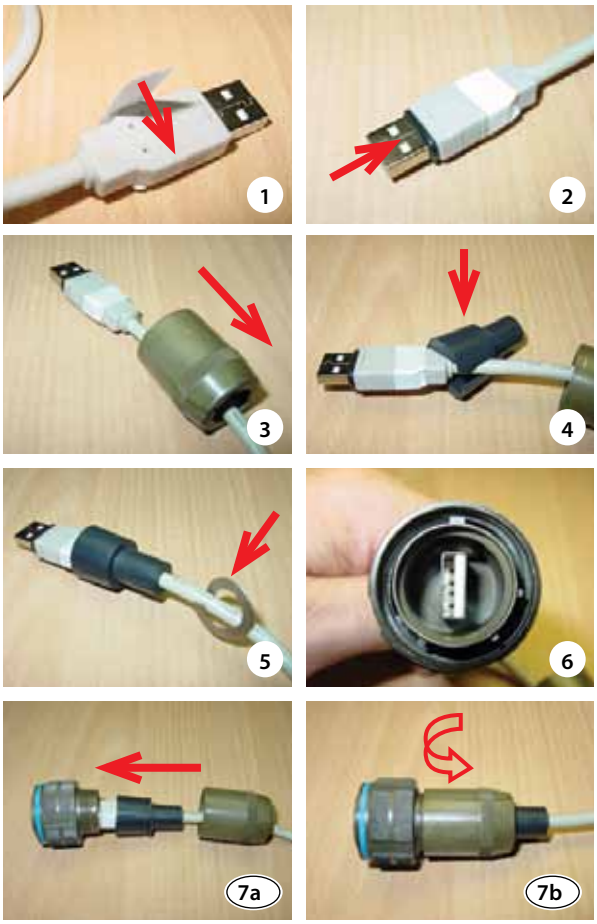

Receptacle assembly

Insert the USB module from the rear. Reference is main key. Beware to have a coding compatible with the coding you used for the plug: on front view, the white shapes in the USBs must be on the same side.

To remove the USB module, insert the removal tool **USBF ODE** from the Front, and push back the module.

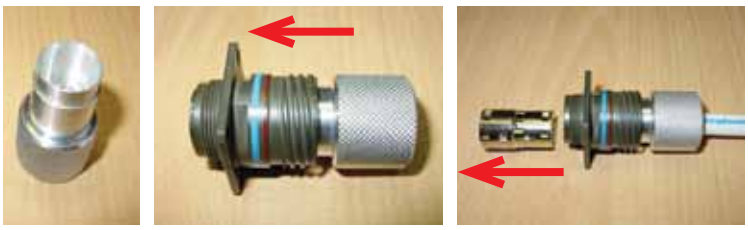

Accessories

- **Metallic caps**

	USBF TVC	2	G
Connector type **6:** plug **2:** square flange receptacle **7:** jam nut eceptacle			
Shells material & finish **N:** aluminium shell - nickel - *ROHS compliant* **G:** aluminium shell - olive drab cadmium **BZ:** marine bronze shell - *ROHS compliant*			

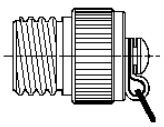

Plug Cap

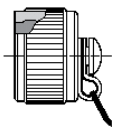

Receptacle Cap

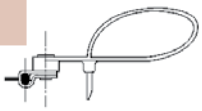

Plug Cap end

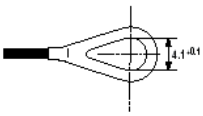

Square flange receptacle cap end

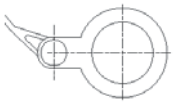

Jam Nut receptacle cap end

- Panel gasket for square flange receptacle
  Thickness: 0,8 mm [.031]
  P/n: **JE15**

- Receptacle insert removal tool: p/n **USBF ODE**

USBF TV

Transversally sealed receptacles

ROHS COMPLIANT N & BZ

In some applications, a transversal sealing for the receptacle is a « must ». This will prevent fluids and dust from going through the receptacle when plug or cap are not mated to the receptacle. The sealed solution (version "S") has a compound at the rear of the receptacle below. In addition, the Sealed USBF TV has been successfully tested in very high vibration corresponding to airplane applications.

Main characteristics

- Sealed against fluids and dusts (IP68)
- Shock, vibration and traction resistant
- No cabling operation in field and no tools required
- Improved EMI protection
- Tri Start Thread coupling mechanism (MIL-DTL-38999 series III type) with anti-decoupling device - Shell size 15
- 2 mechanical coding/polarization possibilities by the user (receptacle insert rotation)
- USBF TV plug retention in the receptacle: 100 N in the axis
- Mating cycles: 500 minimum

Environmental protection

- Sealing (when mated): IP68 (temporary immersion)
- Salt spray: 48 h with nickel plating
  > 500 h with olive drab cadmium
  1000 h with marine bronze shell
- Fire retardant / Low smoke: UL94 V0 and NF F 16 101 & 16 102
- Vibrations: 10 – 500 Hz, 10 g, 3 axes: no discontinuity > 1micro s
- Shocks: IK06 ▸ weight of 250 g drop from 40 cm [15.75 in] onto connectors (mated pair)
- Humidity: 21 days, 43°C, 98% humidity
- Temperature range: - 40°C / +85°C

Applications

- Embedded computers
- Data acquisition and transmission in harsh environment
- Railways
- Battelfield communication systems
- Navy systems

Data transmission

USB specification 2.0
Data rate: up to 480 Mb/s for high speed USB

Part number code

Series USB Field TV	USBF TV	2PES	A	2	N	03	A
Shell Type **2S :** square flange receptacle **2PES:** square flange receptacle + backshell + plastic gland **2PEMS:** square flange receptacle + backshell + metal gland **7S:** jam nut receptacle **7PES:** jam nut receptacle + backshell + plastic gland **7PEMS:** jam nut receptacle + backshell + metal gland							
Coding **"A" (Standard) or "B"**							
Back terminations **2:** rugged USB cable (*see corresponding datasheet page 109*)							
Shells plating **N:** nickel **G:** olive drab cadmium							
USB cable length **03:** 30 cm [11.81 inches] **05:** 50 cm [19.68 inches] **10:** 1 meter [39.37 inches]							
USB cable end **A:** standard USB-A plug **OPEN:** open cable (no connector)							

Examples: - Olive drab cadmium square flange receptacle with 30 cm of USB cable and standard USB-A plug: USBF TV 2S G 03 A
- Nickel jam nut receptacle + backshell + plastic gland, with 1 meter of USB cable, and a standard USBA-A plug: USBF TV 7PES N10 A

Receptacles

- Square flange receptacle 4 mounting holes: shell type 2

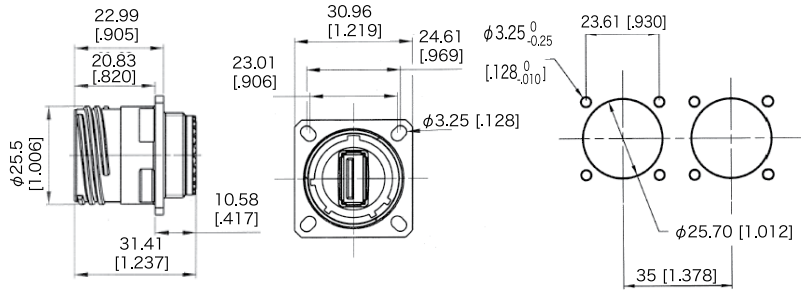

USBF TV 2SA XXX | Panel drilling

- Jam nut receptacle hexagonal nut mounting: shell type 7

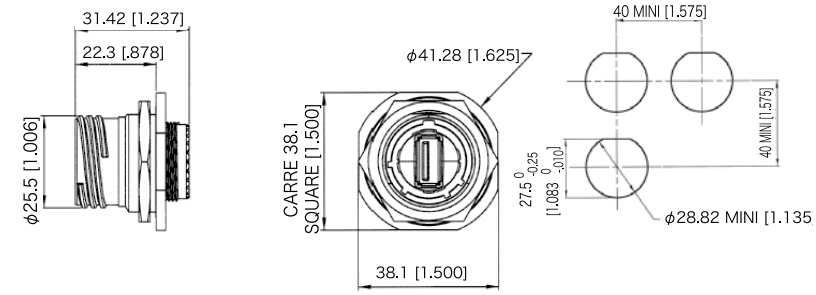

USBF TV 7SA XXX | Panel drilling

- Jam nut receptacle hexagonal nut mounting: shell type 7

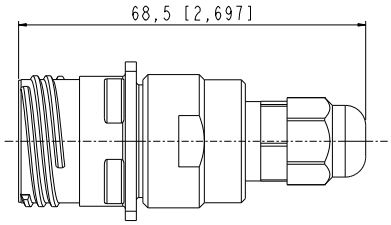

Backshell used with
back termination type 2:
Solder (Sealed – IP68)

USBFTV 2PE(M) SA2XXX / USBFTV 7PE(M) SA2 XXX

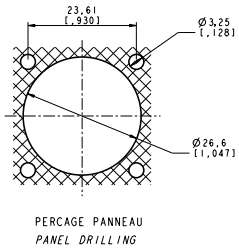

Panel drilling

Cordset end

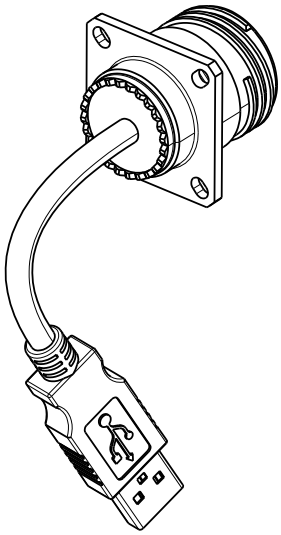

USB cable end type "A"

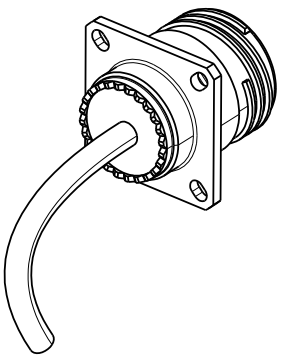

USB cable type "OPEN"

USBF TV

Hermetic receptacles

NEW

ROHS COMPLIANT N & BZ

In some applications, a transversal hermiticity for the receptacle is a « must ». This will prevent gas from going through the receptacle when plug or cap are not mated to the receptacle.
The hermetic solution (version "H") has a compound at the rear of the receptacle. Helium leakage is less than 1.10^{-6} cm^3 per second [0.1 micron cubit ft per hour] at one bar [15 psi] pressure differential.

Applications

- Embedded computers
- Data acquisition and transmission in harsh environment
- Railways
- Battelfield communication systems
- Navy systems

Data transmission

USB specification 2.0
Data rate: up to 480 Mb/s for high speed USB

Main characteristics

- Same as the USBF TV (see page 76)... a complete IP68 sealing of the receptacle is added (even with no plug or no protective cap mated).
- Outside dimensions are the same as the standard USBF TV (USB-A).
- Vibrations : the compounded version of the USBF TV has been tested in vibration following the NAS 1599 aeronautic specification (ambient temperature):
5 - 3000 Hz, 20g, 2.5 mm [.1 inch] double amplitude, 3 axes, 12 hours
Note: this specification exceeds MIL-C-26500 requirements.

IMPORTANT NOTE

Due to the compound, the coding of the connector must be done in the factory: use the codes A or B in the part number. ***Example***: USBFTV 2H **A** 2 N 03 A

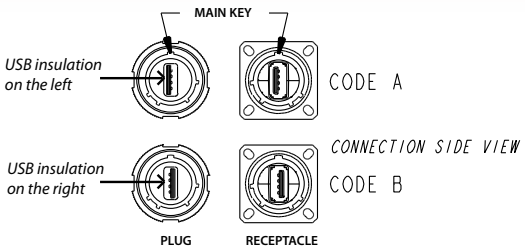

Part number code

Series **USB Field TV**	**USBF TV**	**2H**	**A**	**2**	**N**	**03**	**A**
Shell type **2H :** hermetic square flange receptacle **2PEH:** hermetic square flange receptacle + backshell + plastic gland **2PEMH:** hermetic square flange receptacle + backshell + metal gland **7H:** hermetic jam nut receptacle **7PEH:** hermetic jam nut receptacle + backshell + plastic gland **7PEMH:** hermetic jam nut receptacle + backshell + metal gland							
Coding **"A" (standard) or "B"**							
Back terminations **2:** rugged USB cable (see corresponding datasheet page 109)							
Shells plating **N:** nickel **G:** olive drab cadmium							
USB cable length **03:** 30 cm [11.81 inches] **05:** 50 cm [19.68 inches] **10:** 1 meter [39.37 inches]							
USB cable end **A:** standard USB-A plug **OPEN:** open cable (no connector)							

Examples: - Olive drab cadmium hermetic square flange receptacle with 30 cm of USB cable and standard USB-A plug: USBF TV 2H G 03 A
- Nickel hermetic jam nut receptacle + backshell + plastic gland, with 1 meter of USB cable, and a standard USBA-A plug: USBF TV 7PEH N10 A

USBF TV

Receptacles with 360° EMI backshells

USBFTV receptacles series with EMI backshells provide 360° shielding: same protection than the one proposed per standard MIL-DTL-38999 serie III connectors. We offer these EMI backshells with square flange and jam nut receptacles. The available platings are nickel or olive drab cadmium. With those solutions we suggest using our reinforced USB cable (shielded – zero halogen jacket) ►*see page 109*

We can provide those receptacles:

- with cordset already soldered
- without cordset

Example with a square flange receptacle *(provided without cable)*

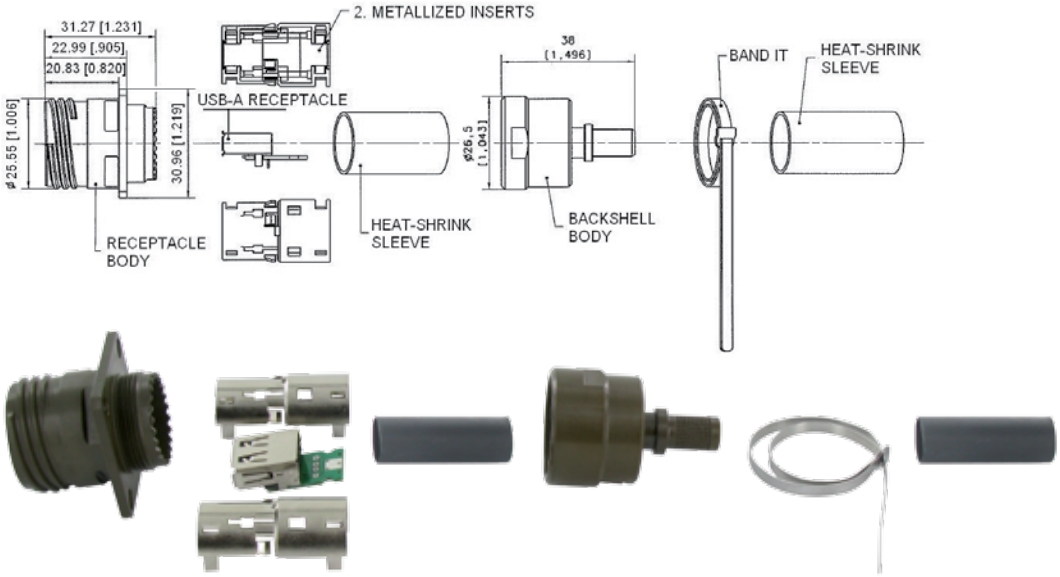

Part number	Plating	Square flange receptacle	Jam nut receptacle
	Nickel - *ROHS compliant*	**KIT40263**	**KIT40245**
	Olive drab cadmium	**KIT40263G**	**KIT40245G**

IMPORTANT NOTE

With receptacles provided without cable, customer will have to solder his cable on the PCB ; please find below the cabling specification.
If customer prefers to use his cable, please check with us compatibility with our EMI backshells: ***www.usbfield.com***

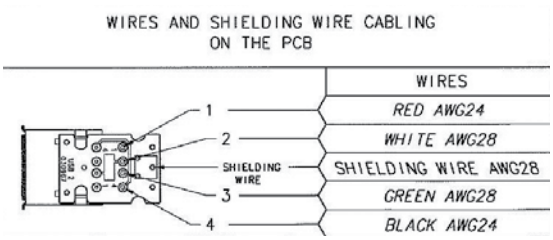

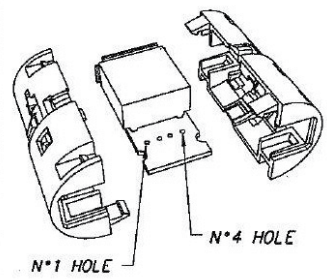

USBF TV

Through bulkhead

NEW

Receptacle

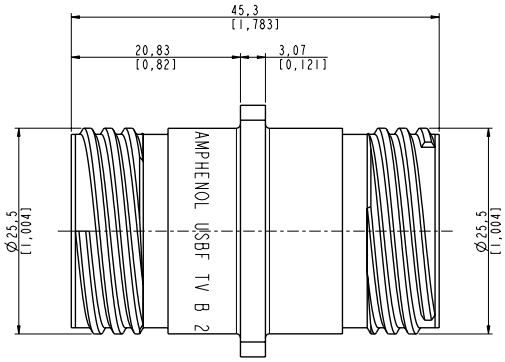

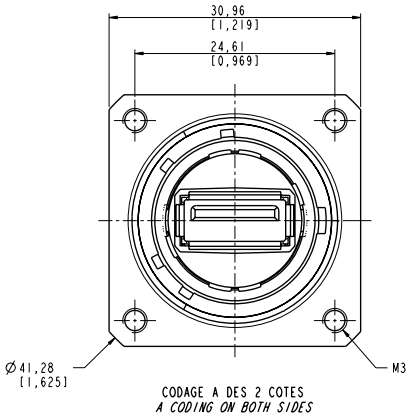

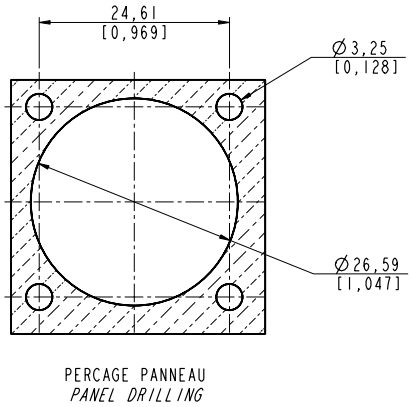

Part number	Plating	P/N
	Nickel - *ROHS compliant*	USBF TV B 2 **N**
	Olive drab cadmium	USBF TV B 2 **G**

Nota : could be used with plug USBFTV, nickel and olive drab cadmium. See page 97.

USBF TV

Stand off receptacles

These receptacles can be soldered directly to your PCB. A compound insures a transversal sealing and good performance in high-vibration environments.
The shell of those receptacles are in the "Stand Off" style.
They can be connected with rugged USBF TV series plugs.

Square flange receptacle

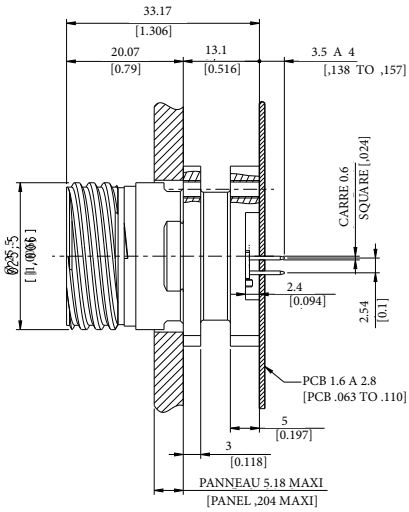

Datas for coding A

Coding B is also available, please consult us.

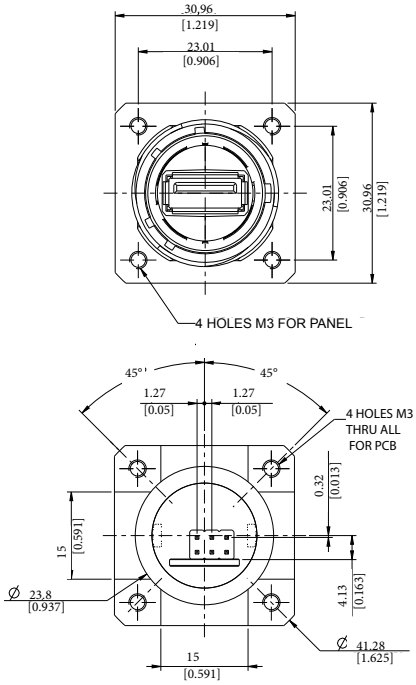

Part number	Plating	P/N for coding A	P/N for coding B
	Nickel - *ROHS compliant*	USBF TV 25 N F459	USBF TV 2S B 5 N F459
	Olive drab cadmium	USBF TV 25 G F459	USBF TV 2S B 5 G F459

Connection side view

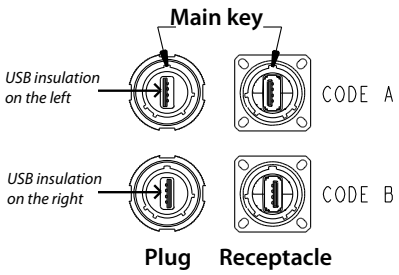

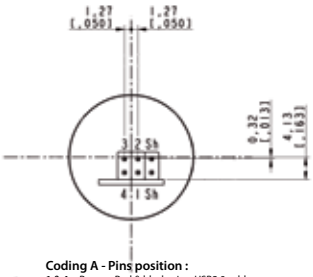

Coding A - Pins position :
1 & 4 = Power - Red & black wires USB2.0 cable
2 & 3 = Signal - White & green wires USB2.0 cable
Sh = Shield

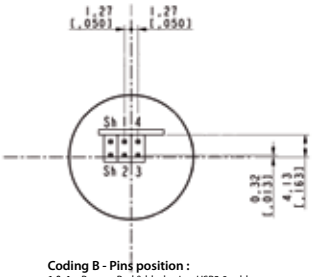

Coding B - Pins position :
1 & 4 = Power - Red & black wires USB2.0 cable
2 & 3 = Signal - White & green wires USB2.0 cable
Sh = Shield

Recommended PCB hole LAYOUT (Coding A) - Solder side view

Nota : for coding B, please consult us.

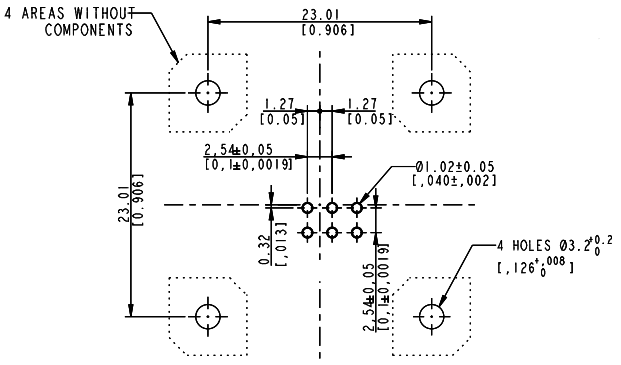

Panel drilling

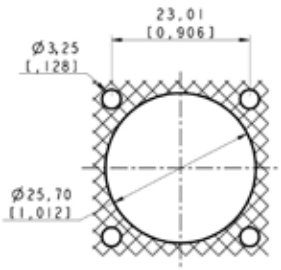

Amphenol

Jam nut receptacle

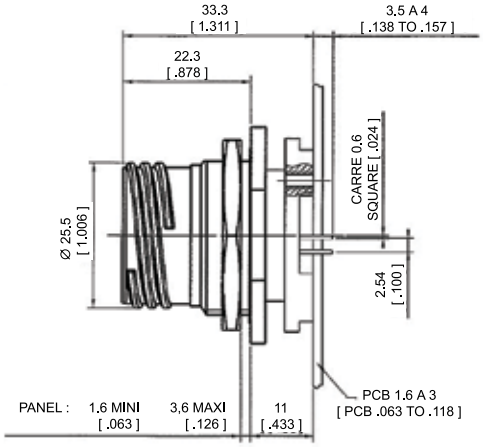

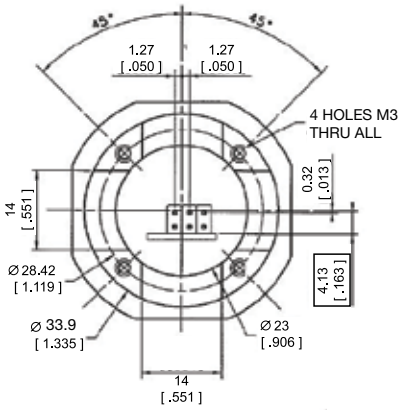

Part number	Plating available	P/N for coding A	P/N for coding B
	Nickel - *ROHS compliant*	**USBF TV 75 N F459**	**USBF TV 7S B 5 N F459**
	Olive drab cadmium	**USBF TV 75 G F459**	**USBF TV 7S B 5 G F459**

Connection side view

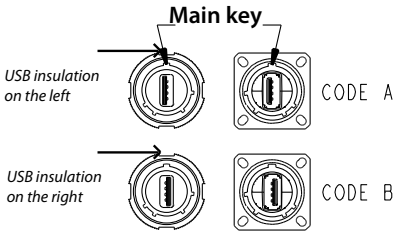

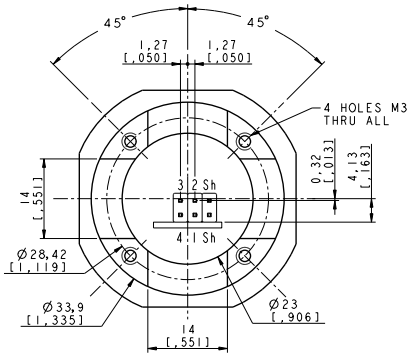

Coding A - Pins position :
1 & 4 = Power - Red & black wires USB2.0 cable
2 & 3 = Signal - White & green wires USB2.0 cable
Sh = Shield

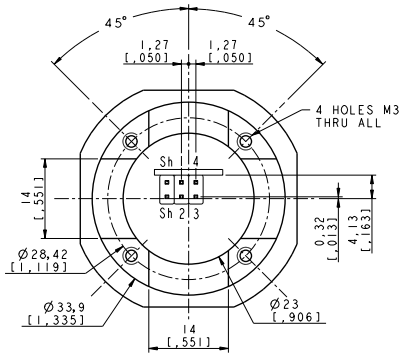

Coding B - Pins position :
1 & 4 = Power - Red & black wires USB2.0 cable
2 & 3 = Signal - White & green wires USB2.0 cable
Sh = Shield

Recommended PCB hole LAYOUT

Solder side view

Coding A

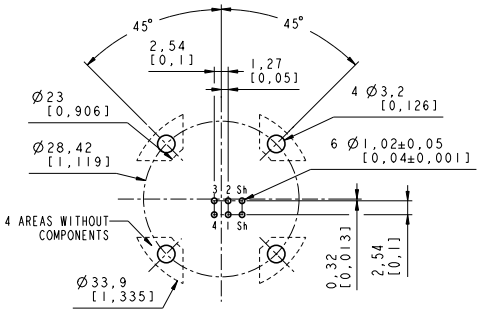

Coding B

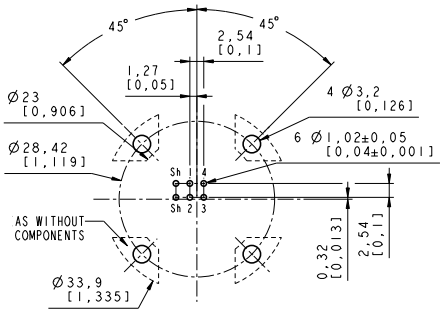

Panel drilling

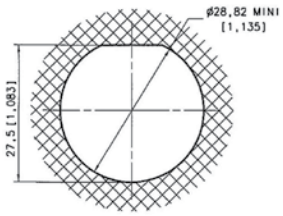

USB 2.0 Receptacle with Self Closing Cap

This Self Closing Cap automatically protects the USB Field square flange receptacles (MIL-C-26482 type), protecting your system from dust and water projections.
The same cap can be used to protect RJ45, USB3.0, USBB and IEEE1394 receptacles. A spring automatically closes the upper part of the cap when either the RJ Field plug, RJ45 cordset, USB or IEEE1394 cordset, or USB key are removed from the receptacle.

USBF 21 X SCC

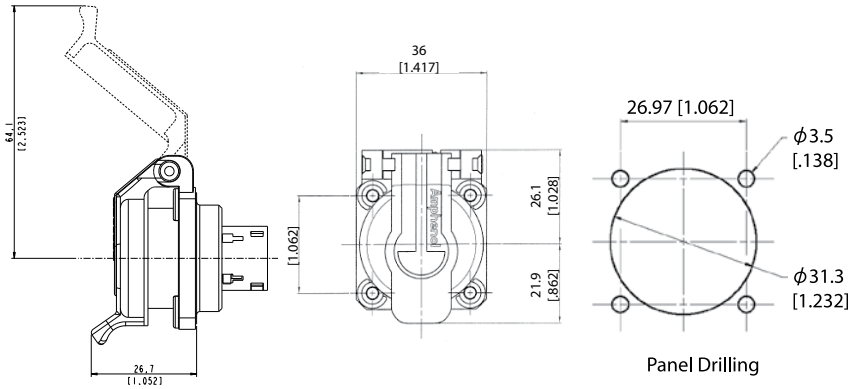

Version: USB-A *(front and back termination)*

		Plating	Metallized inserts (EMI)
Part number *	**USBF 21B SCC**	Black coated	No (blank insert)
	USBF 21N SCC	Nickel plated	Yes
	USBF 21G SCC	Olive drab cadmium plated	Yes

* The part number includes the receptacle + the self closing cap

■ **Note**: Panel gasket with any of these receptacles: **JE18**

RJF 21 X SCC, USBBF 21 X SCC, & IEEE1394

RJ45 version

(see page 25)

USB3.0-A version

(see page 94)

USB-B version

(see page 118)

IEEE1394 version

(see page 143)

Metallic Self Closing Cap (SCC)

For USBF TV 2.0 square flange receptacles.

This Self Closing cap automatically protects the USBF TV (2.0 - type A) square flange receptacles (MIL-DTL-38999 type), protecting your system from dust and water projection.
A spring automatically closes the upper part of the cap when the USB plug is removed from the receptacle.

Sealing level IP67

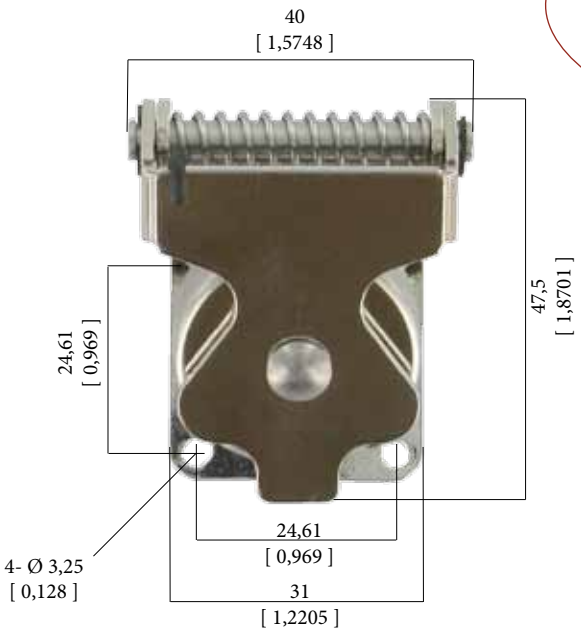

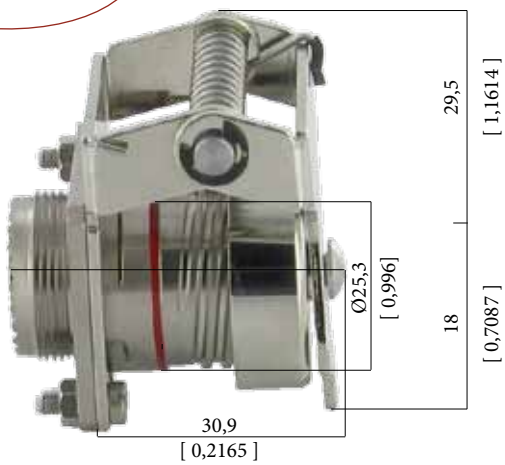

IMPORTANT NOTE
Metal Self Closing cap are sold separately (without receptacle).

	Plating	P/N
Part number	Black - *ROHS compliant*	**USBFTVSCCB**
	Nickel - *ROHS compliant*	**USBFTVSCCN**
	Olive drab cadmium	**USBFTVSCCG**

Remark: also compatible with USB3FTV (type A) & USBBFTV (type B) square flange receptacles:
USB3FTVXX *(see page 95)*
USBBFTV2XX *(see page 119)*

■ **Panel gasket for square flange receptacle (thickness: 0,8 mm [.031]):**

Part number: JE15

High Reliability USB 2.0 Cordsets

ROHS COMPLIANT

General construction: this is a USB-2.0 cable containing one 28 AWG 90Ω characteristic impedance data pair, two 24 AWG power conductors, overall SFTP shields (SFTP = double shielding, braid and foild), jacketed in black UV resistant Polyurethane HFFR*. Designed for fixed or portable applications in industrial and harsh environments.
*HFFR: Halogen Free Flame Retardant.

Jacket compound specification:
Halogen Free Flame Retardant Polyether-based Polyurethane. Glossy finish. Excellent hydrolysis resistance. High microbial resistance. UV resistant. High flexibility.

Applications
- Robotics
- Motion control
- Railways
- CNC machines
- Battelfield communication
- Industrial process

Datas for cable alone only (without USB plug)

PHYSICAL CHARACTERISTICS

DATA CONDUCTORS	bare copper, 7/0.12 mm nom (28 AWG)
DATA INSULATION	0.9 mm nom
COLOR DATA PAIR	Green & white
POWER CONDUCTORS	Tinned copper, 7/0.2 mm (24 AWG)
POWER INSULATION	1.1 mm nom
COLOR POWER WIRE	Red & Black
SHIELDS	Foil: poviding 100% coverage, in contact with tinned copper drain wire and an overall braid providing 65% nom. coverage made of 16x5/0.1 mm tinned copper strands
JACKET	PU compound
COLOR JACKET	Black
WEIGHT	26 lbs/mft (38 kg/km)
OUTSIDE DIAM.	0.20 inch (5.1 mm nom. +/- 0.15)
MIN BEND RADIUS *(During installation)*	45.9 mm (9x O. D.)
MIN BEND RADIUS *(During operation)*	25.5mm (5 x O.D.)
TEMPERATURE installation	Plus 60°C, minus 5°C
TEMPERATURE operational	Plus 85°C, minus 40°C

ELECTRICAL CHARACTERISTICS

DC RESISTANCE	94 Ohms/Km @ 20°C
IMPEDANCE	90 +/- 13 Ohms 1-400 MHz
ATTENUATION	
1 KHZ	8 db/100m max.
4 MHZ	15,6 db/100m max.
24 MHZ	38 db/100m max.
96 MHZ	76 db/100m max.
200 MHZ	128 db/100m max.
400 MHZ	232 db/100m max.
CAPACITANCE 2X28 AWG	54pF/m nom. @ 1KHz
CAPACITANCE UNBALANCE	2.0 pF/m max. @ 1KHz (wire to ground)
DIELECTRIC STRENGTH	VAC/1 min - 500 V/Min
RESISTANCE UNBALANCE	2% max. @ 20°C
VELOCITY OF PROPAGATION	65% min. 68% max.

CORDSETS WITH A USB A PLUG OVERMOLDED ON EACH END (OUT OF USB SPECIFICATION > 5 M)

Length (m/ft)	Part number
6 m / 19,68 ft	USB2 AA 600 PU HFFR
7 m / 22.96 ft	USB2 AA 700 PU HFFR
8 m / 26.24 ft	USB2 AA 800 PU HFFR
9 m / 29.52 ft	USB2 AA 900 PU HFFR
10 m / 32.80 ft	USB2 AA 1000 PU HFFR

REEL OF DRUM (WITHOUT USB PLUG ON ENDS)

Length	PN
300 m / ~ 984 ft	190-040567-00

CORDSETS WITH A USB A PLUG OVERMOLDED ON EACH END (UNDER USB SPECIFATION ≤ 5M)

Length (m/ft)	Part number
0.5 m / 1,64 ft	USB2 AA 050 PU HFFR
1 m / 3.28 ft	USB2 AA 100 PU HFFR
1.50 m / 4.92 ft	USB2 AA 150 PU HFFR
2 m / 6.56 ft	USB2 AA 200 PU HFFR
2.50 m / 8.2 ft	USB2 AA 250 PU HFFR
3 m / 9.84 ft	USB2 AA 300 PU HFFR
3.50 m / 11.48 ft	USB2 AA 350 PU HFFR
4 m / 13.12 ft	USB2 AA 400 PU HFFR
4.5 m / 14.76 ft	USB2 AA 450 PU HFFR
5 m / 16.40 ft	USB2 AA 500 PU HFFR

USBF SC

Quick release series

ROHS COMPLIANT N & BZ

This product offers a new coupling solution, particurlarly for applications requiring quick disconnect. The system consists of a circular spring within in the receptacle keeping the plug mated, and creating an internal coupling mechanism.

Main characteristics

- Sealed against fluids and dusts (IP67)
- Shock, vibration and traction resistant
- No cabling operation in field and no tools required
- Improved EMI protection
- Mating cycles: 500
- Mating force after 500 cycles: 40 N
- Unmating force after 500 cycles: 55 N

Environmental protection

- Sealing (when mated): IP67 (temporary immersion)
- Salt spray: 48 h with nickel plating
  > 500 h with olive drab cadmium
- Fire retardant / Low smoke: UL94 V0 and NF F 16 101 & 16 102
- Vibrations: 10 – 500 Hz, 10 g, 3 axes: no discontinuity > 1micro s
- Shocks: IK06 ►weight of 250 g drop from 40 cm [15.75 in] onto connectors (mated pair)
- Humidity: 21 days, 43°C, 98% humidity
- Temperature range: - 40°C / +85°C

Applications

- Embedded computers
- Data acquisition and transmission in harsh environment
- Railways
- Battelfield communication systems
- Navy systems

Data transmission

USB specification 2.0
Data rate: up to 480 Mb/s for high speed USB

Part number code

Series **USBF spring loaded**	**USBF SC**	**2**	**1**	**G**
Shell Type **6:** plug **1:** inline receptacle **2:** square flange receptacle **7:** jam nut receptacle				
Back terminations *(receptacles only)* **1:** female USB-A **2:** solder (4 tinned holes) - Not available for shell type "1" (inline receptacle)				
Shells material & finish **N:** aluminium shell - nickel plating - *ROHS compliant* **G:** aluminium shell - olive drab cadmium plating **BZ:** marine bronze shell - *ROHS compliant*				

Back terminations

USBFSC Back terminations receptacles

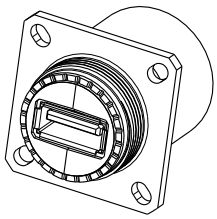

Type **1**: female USB-A

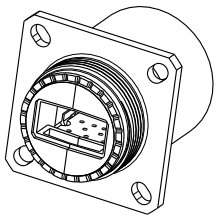

Type **2**: solder (4 tinned holes)

Amphenol

Plug

Shell type 6

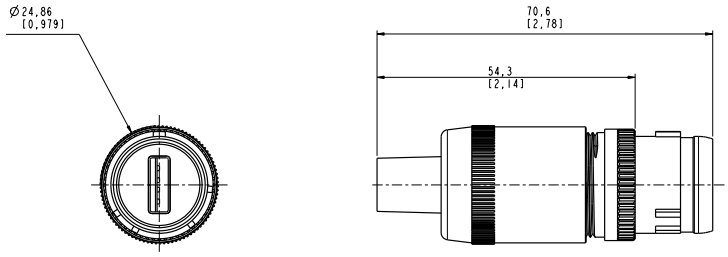

USBFSC 6 X

Receptacles

Square flange receptacle 4 mounting holes: shell type 2

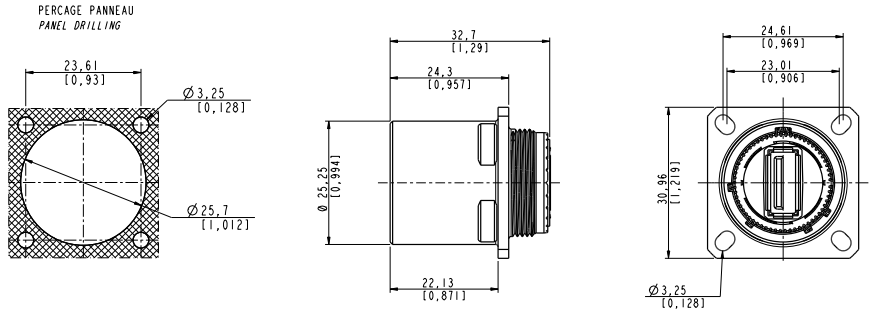

USBFSC 21 X

Jam nut receptacle hexagonal nut mounting: shell type 7

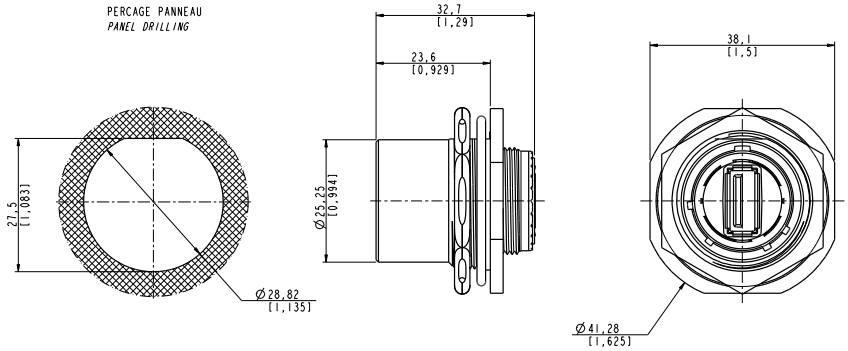

USBFSC 71 X

Inline receptacle: shell type 1

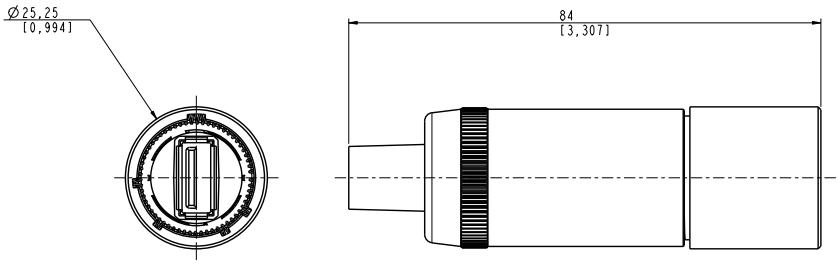

USBFSC 11 X

Amphenol

USBBF TV *(USB-B)*

USB connection system for harsh environment

USB Field allows you to use a standard USB 2.0 connection in harsh environment:.

Main characteristics

- Sealed against fluids and dusts (IP68)
- Shock, vibration and traction resistant
- No cabling operation in field and no tools required
- Improved EMI protection
- Tri Start Thread coupling mechanism (MIL-DTL-38999 series III type) with anti-decoupling device - Shell size 15
- Plug retention in the receptacle: 100N in the axis
- Mating cycles: 500 minimum
- Back terminations available:
  - a USB-A receptacle
  - solder: 4 tinned holes on the PCB to solder your wire

Environmental protection

- Sealed against fluids and dusts (IP68)
- Temperature range: - 40°C / +85°C

Applications

- Embedded Computers
- Data Acquisition and transmission in harsh environment
- Railways
- Battelfield Communication Systems
- Navy Systems

Data transmission

USB specification 2.0
Data rate: up to 480 Mb/s for high speed USB

Part number code

Series **USBB Field TV**	**USBBF TV**	**2**	**1**	**G**
Shell type **6:** plug **2:** square flange receptacle **2PE:** square flange receptacle with metal backshell *(type 1)* & with metal backshell + plastic gland *(type 2)* **2PEM:** square flange receptacle metal gland (only for soldering back termination type 2) **7:** jam nut receptacle **7PE:** jam nut receptacle with metal backshell *(type 1)* & with metal backshell + plastic gland *(type 2)* **7PEM:** jam nut receptacle metal gland (only for soldering back termination type 2)				
Back terminations *(receptacles only)* **1:** female USB-A **2:** solder (4 tinned holes)				
Shells material & finish **N:** aluminium shell - nickel plating - *ROHS compliant* **G:** aluminium shell - olive drab cadmium plating				

Examples:
- Plug-cadmium plating: USBBF TV 6G
- Square flange receptacle-USB-A back termination - cadmium plating: USBBF TV 21G
- Jam nut receptacle, solder termination -nickel plating: USBBF TV 72N

Back terminations

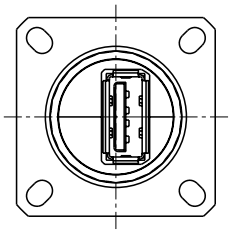

Type **1**: female USB-A

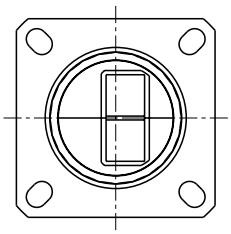

Type **2**: solder (4 tinned holes)

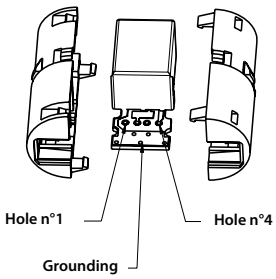

Plug

■ Shell type 6

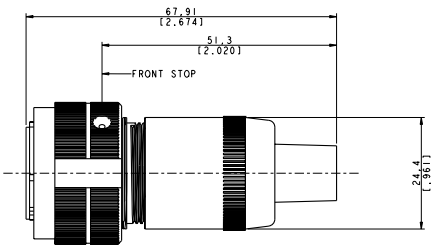

USBBFTV 6 X

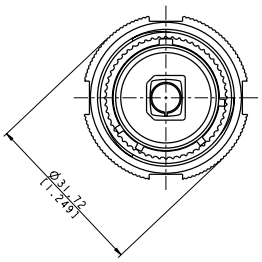

Panel Drilling

Receptacles

■ Shell type **2** - Square flange receptacle

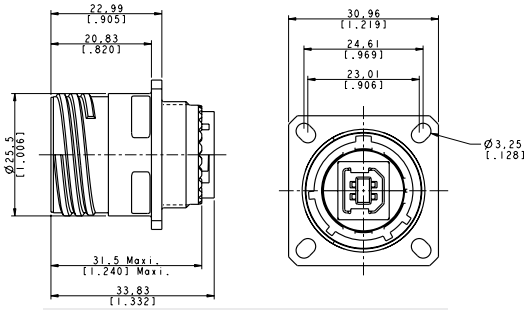

USBBFTV 2 XX

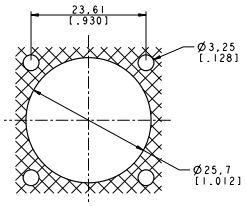

Panel Drilling

■ Shell type **7** - Jam nut receptacle

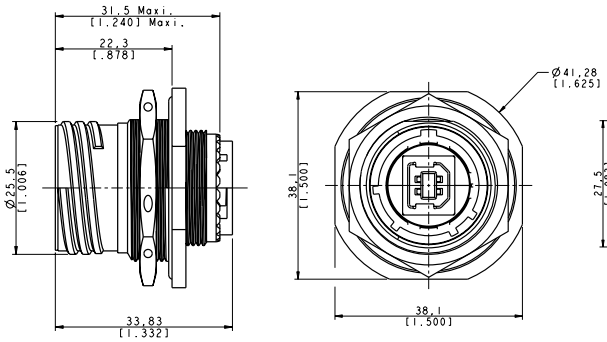

USBBFTV 7 XX

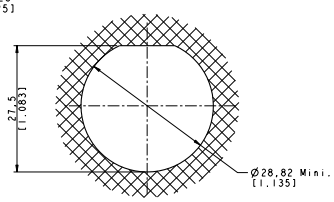

Panel Drilling

■ «**2PEM**» and «**7PEM**» shells with backshell to protect back termination from dust, shocks and vibration.

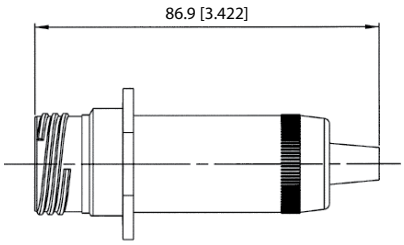

Backshell used with back termination type 1:
USB A receptacle (Not sealed)

Same panel drilling as USBBFTV 2xx

USBBF TV 2PE / 7PE-1

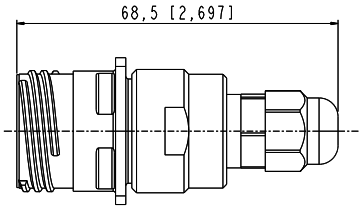

Backshell used with
back termination type 2:
Solder (Sealed – IP68)

USBBF TV 2PE(M) / 7PE(M)-2

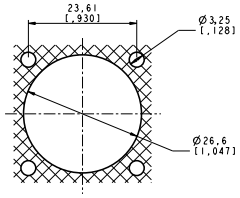

PERCAGE PANNEAU
PANEL DRILLING

Panel drilling *(for type 2 only)*

Accessories

■ **Metallic caps** (same as USB-A version - see page 99)

	USBF TVC	2	G
Connector type **6:** plug **2:** square flange receptacle **7:** jam nut receptacle			
Shells material & finish **N:** nickel plating - *ROHS compliant* **G:** olive drab cadmium plating			

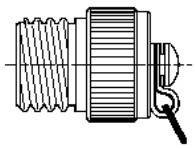

Plug Cap

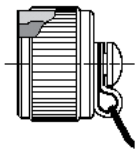

Receptacle Cap

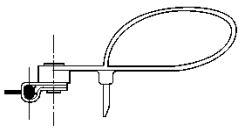

Plug Cap end

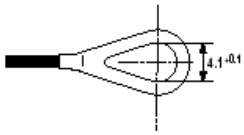

Square flange receptacle cap end

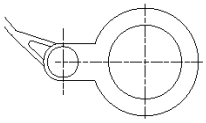

Jam Nut receptacle cap end

■ Panel gasket for square flange receptacle (thickness: 0,8 mm [.031]): p/n **JE15**

USBBF TV

Stand off receptacles

These receptacles can be soldered directly to your PCB. A compound insures a transversal sealing and good performance in high-vibration environments.
The shell of those receptacles are in the "Stand Off" style.
They can be connected with USBBF TV series plugs.

Square flange receptacle

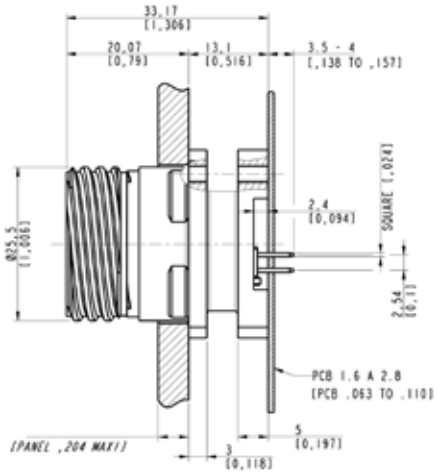

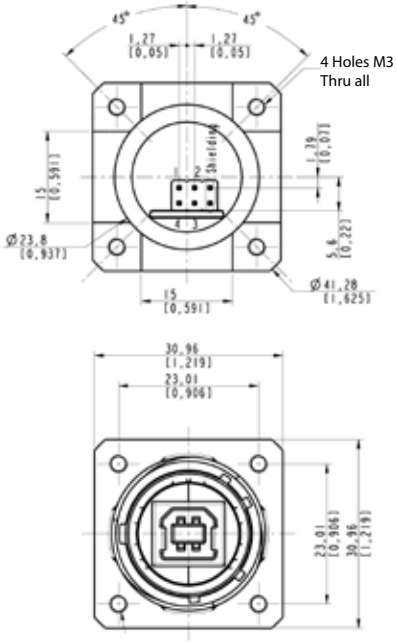

Part number	Plating	Part number
	Nickel - *ROHS compliant*	**USBBF TV 2 5 N F459**
	Olive drab cadmium	**USBBF TV 2 5 G F459**

Recommended PCB hole LAYOUT

Solder side view

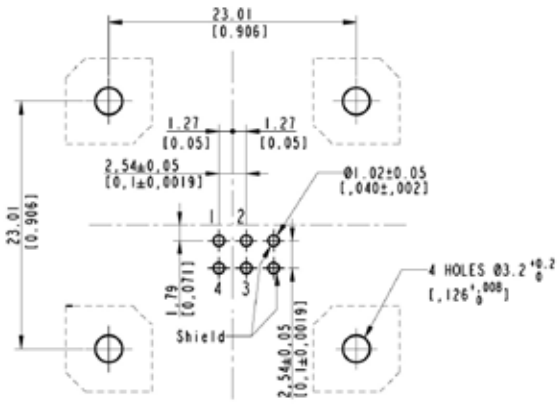

Panel drilling

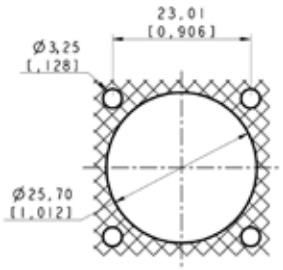

Amphenol

Jam nut receptacle

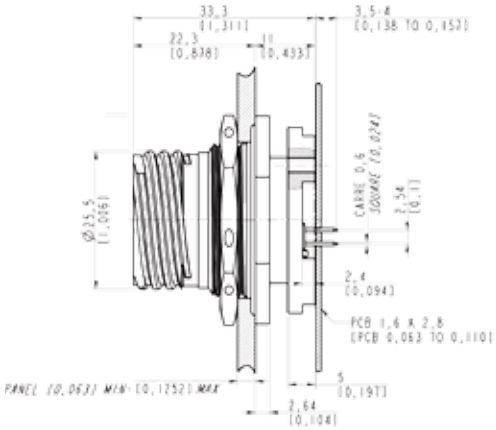

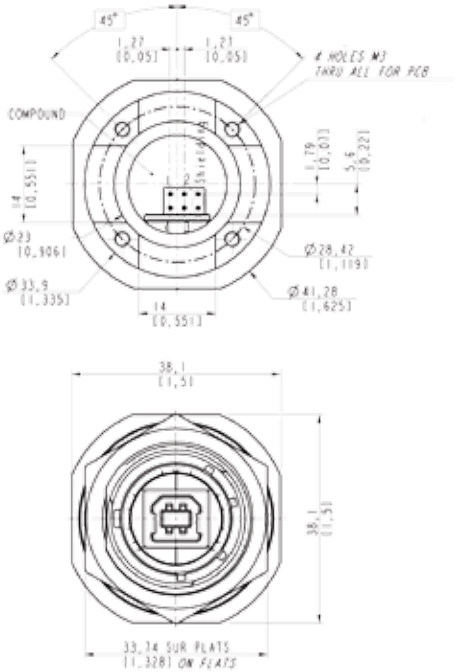

Part number	Plating	Part number
	Nickel - *ROHS compliant*	**USBBF TV 7 5 N F459**
	Olive drab cadmium	**USBBF TV 7 5 G F459**

Recommended PCB hole LAYOUT

Solder side view

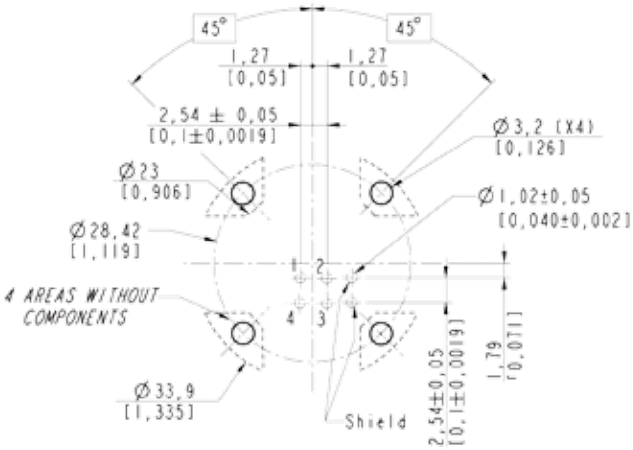

Panel drilling

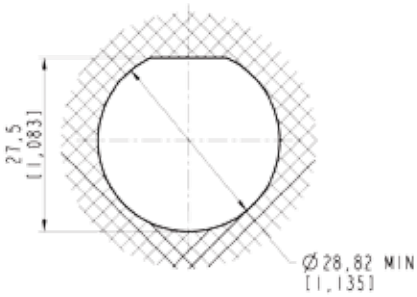

USBBF TV

Transversally sealed receptacles

With USB Field, you can insert a standard USB 2.0 cordset into a metallic plug which will protect it from shocks, dust and fluids.
No hazardous on-field cabling and grounding!
This metallic plug is connected into a receptacle, using a Tri Start Thread coupling mechanism (MIL-DTL-38999 series III type) with anti-decoupling device for high vibrations.

Applications

- Embedded computers
- Data acquisition and transmission in harsh environment
- Railways
- Battelfield communication systems
- Navy systems

Data transmission

USB specification 2.0
Data rate: up to 480 Mb/s for high speed USB

Main characteristics

- Sealed against fluids and dusts (IP68)
- Shock, vibration and traction resistant
- No cabling operation in field and no tools required
- Improved EMI protection
- Tri Start Thread coupling mechanism (MIL-DTL-38999 series III type) with anti-decoupling device - Shell size 15
- 2 mechanical coding/polarization possibilities by the user (receptacle insert rotation)
- USBF TV plug retention in the receptacle: 100 N in the axis
- Mating cycles: 500 minimum

Environmental protection

- Sealing (when mated): IP68 (temporary immersion)
- Salt spray: 48 h with nickel plating
  > 500 h with olive drab cadmium
  1000 h with marine bronze shell
- Fire retardant / Low smoke: UL94 V0 and NF F 16 101 & 16 102
- Vibrations: 10 – 500 Hz, 10 g, 3 axes: no discontinuity > 1micro s
- Shocks: IK06 ▸ weight of 250 g drop from 40 cm [15.75 in] onto connectors (mated pair)
- Humidity: 21 days, 43°C, 98% humidity
- Temperature range: - 40°C / +85°C

Part number code

Series **USBB Field TV**	**USBBF TV**	**7S**	**2**	**G**	**10**	**OPEN**
Shell type **2S:** sealed square flange receptacle **2PES:** sealed square flange receptacle + backshell + plastic gland **2PEMS:** sealed square flange receptacle + backshell + metal gland **7S:** sealed jam nut receptacle **7PES:** sealed jam nut receptacle with backshell **7PEMS:** sealed jam nut receptacle + backshell + metal gland						
Back terminations **2:** rugged USB cable						
Shells plating **N:** nickel **G:** olive drab cadmium						
USB cable length **03:** 30 cm [11.81 inches] **05:** 50 cm [19.68 inches] **10:** 1 meter [39.37 inches]						
USB cable end **A:** standard USB-A plug **OPEN:** open USB cable (no connector)						

Examples: - Olive drab cadmium jam nut receptacle: USBBF TV 7 XX
- Nickel square flange receptacle: USBBF TV 2 XX

USBB receptacle with Self Closing Cap

NEW

ROHS COMPLIANT N & B

Sealing level IP54
(Splash and dust Proof)

This Self Closing Cap automatically protects the RJ Field square flange receptacles (MIL-C-26482 type), protecting your system from dust and water projections. The same cap can be used to protect USB and IEEE1394 receptacles. A spring automatically closes the upper part of the cap when either the RJ Field plug, RJ45 cordset, USB or IEEE1394 cordset, or USB key are removed from the receptacle.

USBBF 21 X SCC

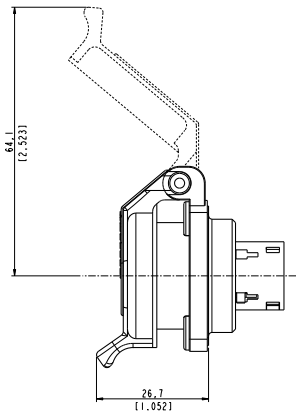

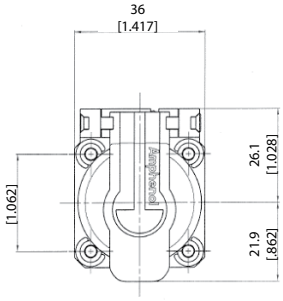

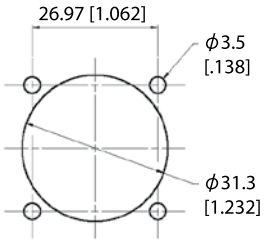

Panel Drilling

Version: USB-B *(front in USB-B and back termination in USB-A)*

	Plating	Metallized inserts (EMI)	Part number
Part number*	Black coated	No (*blank insert*)	**USBBF 21B SCC**
	Nickel plated	Yes	**USBBF 21N SCC**
	Olive drab cadmium plated	Yes	**USBBF 21G SCC**

* The part number includes the receptacle + the self closing cap

■ **Note**: panel gasket with any of these receptacles, p/n **JE18**

RJF 21 X SCC, USBF 21 X SCC, & IEEE1394

RJ45 version
(see page 25)

USB2.0 & 3.0 - A version
(see pages 94 & 107)

IEEE1394 version
(see page 143)

Metallic Self Closing Cap (SCC)

For USBB square flange receptacles.

This Self Closing cap automatically protects the USBB (2.0 - type A) square flange receptacles (MIL-DTL-38999 type), protecting your system from dust and water projection.
A spring automatically closes the upper part of the cap when the USB plug is removed from the receptacle.

Sealing level IP67

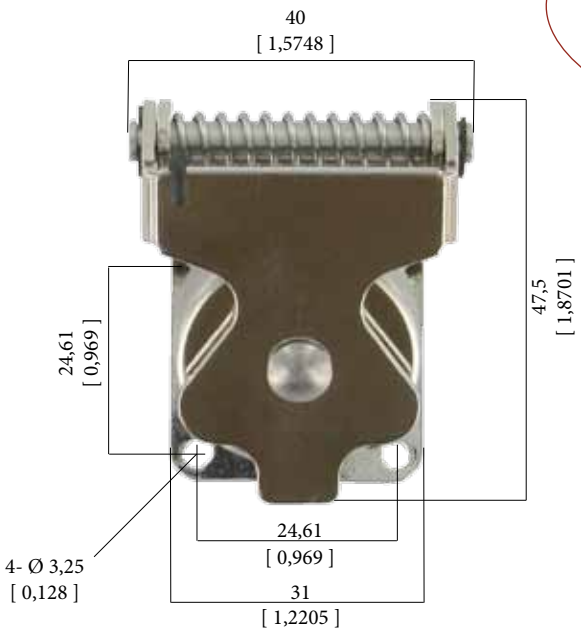

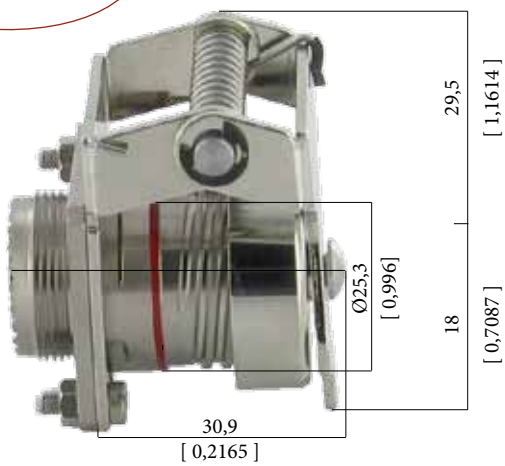

IMPORTANT NOTE
Metal Self Closing cap are sold separately (without receptacle).

	Plating	P/N
Part number	Black - *ROHS compliant*	**USBFTVSCCB**
	Nickel - *ROHS compliant*	**USBFTVSCCN**
	Olive drab cadmium	**USBFTVSCCG**

Remark: also compatible with USB3FTV (type A) & USBBFTV (type B) square flange receptacles:
USB3FTV2XX *(see page 95)*
USBFTV2XX *(see page 108)*

■ **Panel gasket for square flange receptacle (thickness: 0,8 mm [.031]):**

Part number: JE15

Amphenol

Special USB adaptor

For Military & Commercial Aeronautics

NEW

At the rear of the adaptor, the connection is for connectors type EN3646.

Adaptor USB only

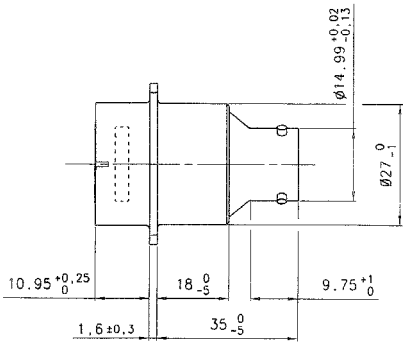

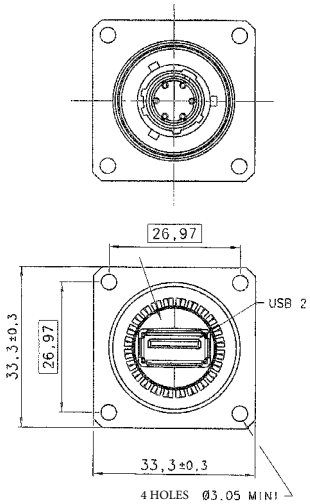

Part number	Plating	Coding	P/n
	Black anodized	N	**35608**
	Black anodized	W	**35615**

Adaptor USB + Self Closing Cap (SCC)

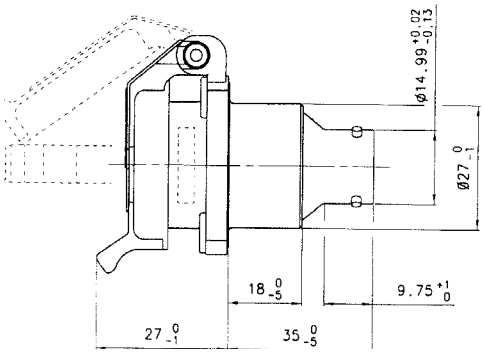

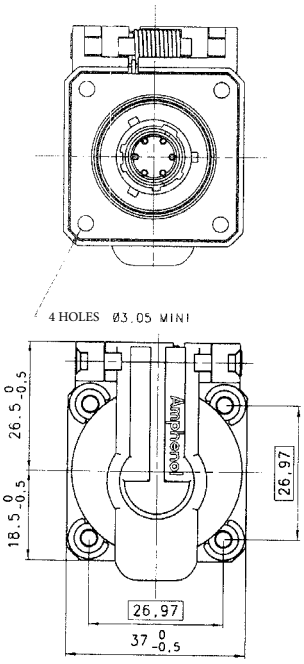

Part number	Plating	Coding	P/n
	Black anodized	N	**35616**
	Black anodized	W	**35617**

For all options:

10-6 Male contact EN3155

Coding N

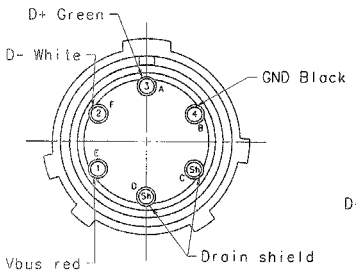

Coding W

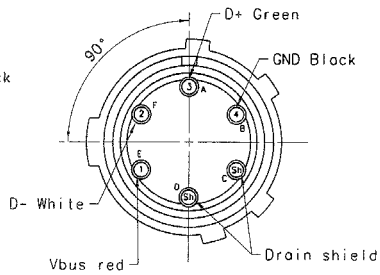

Panel drilling

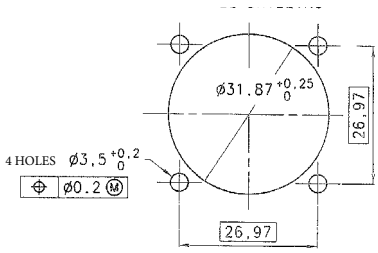

Rugged USB Solutions

Cable assemblies

Table of contents

NEW USB-A Field : plastic & neoprene solutions with self closing cap 122

NEW USB-B Field : Plastic shell - Overmolded cordset plug 125

USB-A Field

Rugged USB-A plastic & neoprene solutions with Self Closing Cap

NEW

Amphenol USB-A Field - Plastic & Neoprene versions are rugged USB interconnect solutions fitted to be used in any industrial harsh environment.
The Self Closing Cap enclosure enables to protect the USB-A Field receptacle from dust and fluids when the plug or the USB Memory key are unmatted.

Applications

- Access point
- Telecom equipments
- Video control
- Robotics
- Industrial process control
- CNC machines
- Special machines

Main characteristics

- Sealing level:
  - Matted condition with plug or rugged USB Memory Key : IP67
  - Receptacle with Self Closing Cap alone : IP54
- Mating cycles: 500
- Push-pull mating
- Neoprene shells for plug & USB Keys
- Data transmission: USB specification 2.0
- Data rate: up to 480 Mb/s for high speed USB
- Temperature range: -40°C / +85°C
- RoHS compliant

Memory Key with soft neoprene shell

IP67 when matted on receptacle or with neoprene protective cape

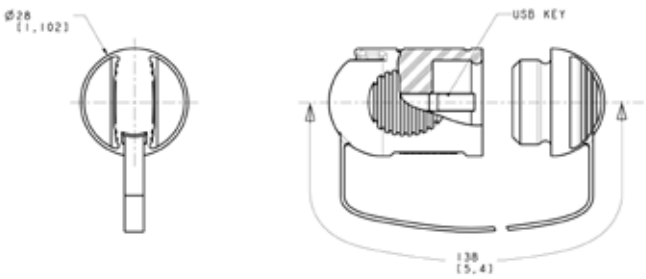

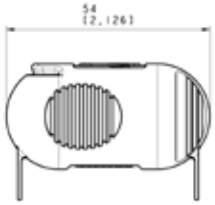

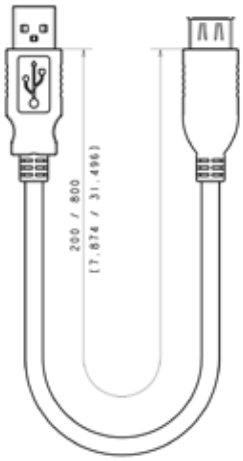

Part number		Capacity (Mb)
	USBAPKEY 4096	4096
	USBAPKEY 8192	8192

Amphenol

Plug with soft neoprene shell

Part number:
USBAP 6 xxxA
with USB-A plug

IP67 when matted on receptacle

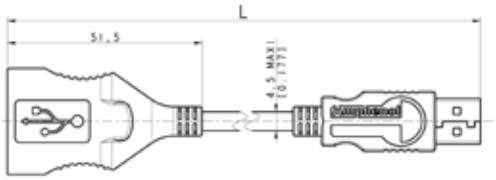

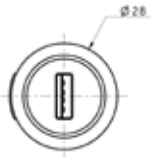

Part number:
USBAP 6 xxx
Open

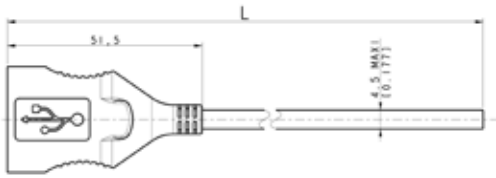

		Extremity type *Open or USB-A*	L $^{+5cm}_{0}$ *Meters*	L $^{+0.164ft}_{0}$ *Feet*
Part number	**USBAP6 05 OPEN**	Open	0.5	1.64
	USBAP6 05A	USB-A	0.5	1.64
	USBAP6 10 OPEN	Open	1.0	3.28
	USBAP6 10A	USB-A	1.0	3.28
	USBAP6 15 OPEN	OPEN	1.5	4.92
	USBAP6 15A	USB-A	1.5	4.92
	USBAP6 20 OPEN	OPEN	2.0	6.56
	USBAP6 20A	USB-A	2.0	6.56

Square flange receptacle

IP54 when alone

Part number:
USBAPSCC 21

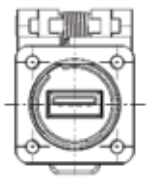

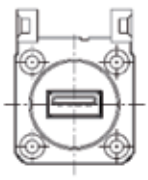

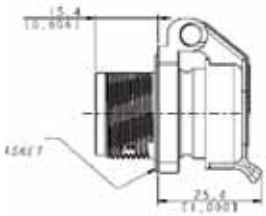

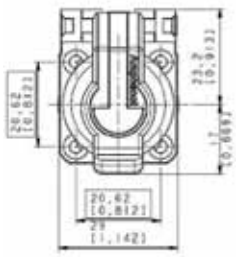

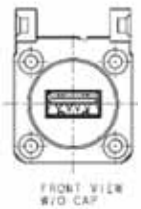

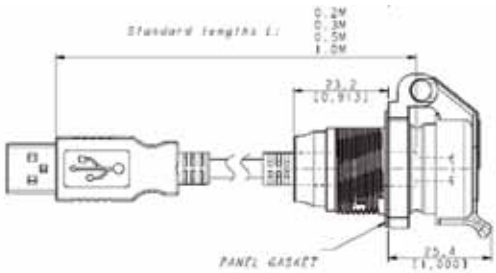

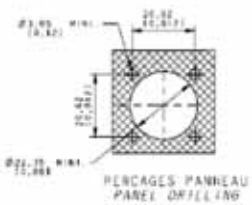

		Cordset length *Meters*	Cordset length *Feet*
Part number	**USBAPSCC 22 02A**	0.2	0.66
	USBAPSCC 22 03A	0.3	0.98
	USBAPSCC 22 05A	0.5	1.65
	USBAPSCC 22 10A	1.0	3.28

Jam nut receptacle

Part number:
USBAPSCC 71

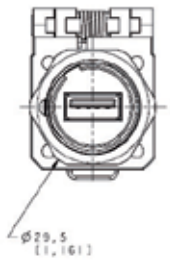

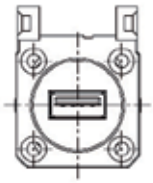

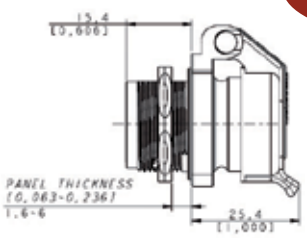

IP54
when alone

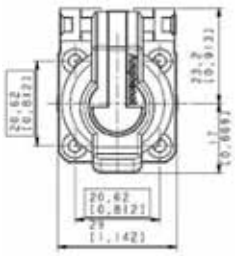

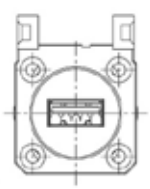

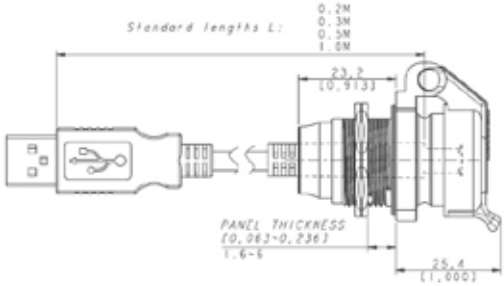

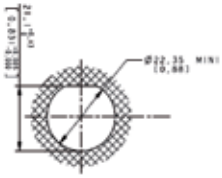

		Cordset length *Meters*	Cordset length *Feet*
Part number	**USBAPSCC 72 02A**	0.2	0.66
	USBAPSCC 72 03A	0.3	0.98
	USBAPSCC 72 05A	0.5	1.65
	USBAPSCC 72 10A	1.0	3.28

USB plastic - IP67 cap (for square flange receptacle only)

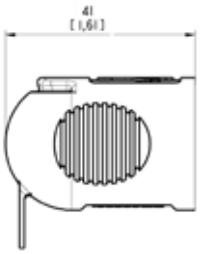

Part number:
USBAP IP67 CAP

Cap lanyard fixed by a screw
(for square flange receptacle only)

How to unplug:

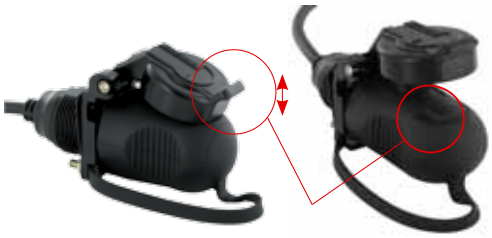

Locking Shape:
Push-up the self-closing cap before removing the USBKey, Plug or IP67 protective cap from the receptacle

USB-B Field

Plastic shell - Overmolded cordset plug

IP68 SEALED USB-B CONNECTION SYSTEM

- Plastic shells
- Thread coupling
- Overmolded plug cordset: male sealed USB-B plug to standard USB-A plug
- Available cordset lengths: 1m and 2m - For other lengths please contact us
- Rear mount jam nut receptacle with 50mm flying lead + 5-way connector back termination. Panel gasket included.
- Temperature range: -20°C +80°C

Applications

■ Embedded computers ■ Data transfer ■ Numerical control machine

Overmolded plug cordset : male sealed USB-B plug, standard USB-A plug.

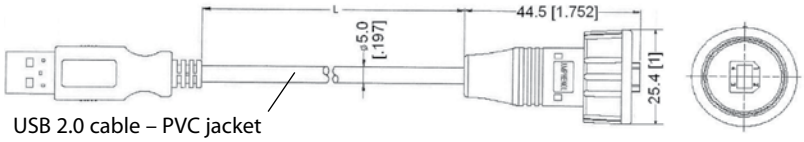

Part number		Length
	USBBF6100	1000±50mm [39.37±1.97]
	USBBF6200	2000±50mm [78.74±1.97]

Receptacle - Female USB-B

Part number :
USBBF7

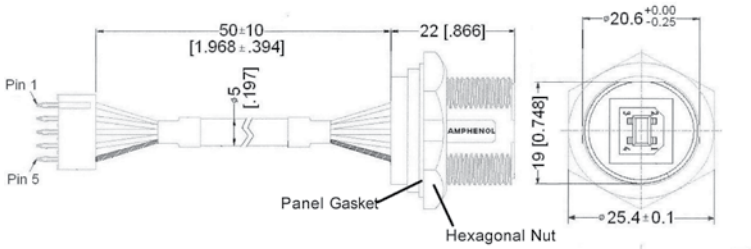

JWT CONNECTOR – PITCH 2.5MM

JWT 1 = USB1 = RED (AWG 24)
JWT 2 = USB2 = WHITE (AWG 28)
JWT 3 = USB3 = GREEN (AWG 28)
JWT 4 = USB4 = BLACK (AWG 24)
JWT 5 = USB Shield

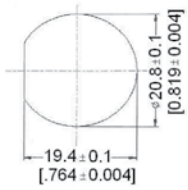

Panel Drilling

Receptacle cap

Part number:
USBBFC7

Amphenol

NOTES

Rugged USB Solutions

Rugged electronics

Amphenol

Table of contents

NEW Reinforced USBF TV Memory Keys 128
Reinforced USB Memory Keys 129
NEW Reinforced USB amplifier 130

Reinforced USBF TV Memory Keys

Derived from MIL-DTL-38999 series III specification • from 4 GB to 256 GB

NEW

ROHS COMPLIANT N

We provide reinforced USB memory keys available in different capacities. They can be used ONLY with our USBFTV series receptacles. When mated on the receptacle, the system is IP68 and allows data transmission in harsh environments.

Environmental protection

- Sealing: IP68 (when mated)
- Salt spray: 48 h with nickel plating (ROHS)
  > 500 h with olive drab cadmium
- Vibrations: MIL-STD-810F method 514.5 fig 514.5.C cat 14
- Temperature range: - 40°C / +85°C (MIL-STD-810F)
- Data transmission during vibration & temperature tests

IMPORTANT NOTE

USBFTV memory key to be used with USBFTV receptacles (3.0 and 2.0)

▶ *see page 86 for 3.0 & page 97 for 2.0*

Other features

- Type: USB2.0 (capacity 4 GB)
  USB3.0 (capacities 8 GB to 256 GB)
- Voltage: 5V DC - 500 mA max

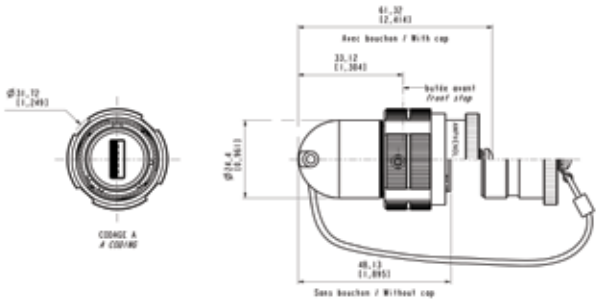

Memory size **from 4 to 64GB**

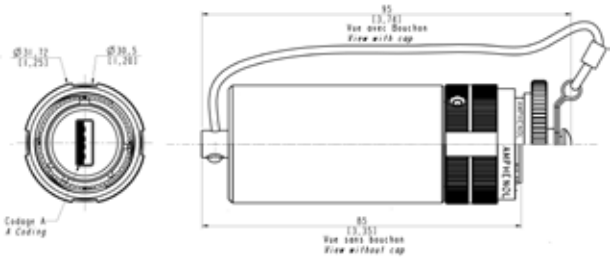

Memory size of **256GB**

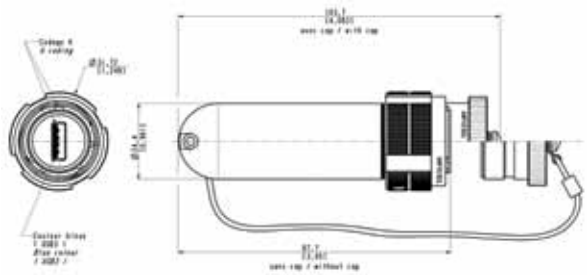

Memory size of **128GB**

USB cordset is included with each memory key

Note: Our rugged memory keys are sold under standard electronic manufacturer configuration for data storage.
If, for your own usage, you need to re-configurate the electronic (under Linux for example), it will be under customer responsibility. Amphenol is not responsible for any wrong doing or misguided use of the product by its customers.
Under request, we can provide you with electronic manufacturer details so you can check if their specific configuration will work with the electronic (please specify memory capacity).
Amphenol can also study the integration of electronic selected by a customer. In order to do so, we need to receive a sample of the USB memory stick so we can study its integration into our existing concept or adapt it.
Please send your requests to contact@usbfield.com

Definition of part number

USBFTV KEY 6 FOR USB 2.0 VERSION		**4096** CAPACITY FOR USBFTV KEY: 4096		
	A		**N**	**CAP**
USB3FTV KEY 6 FOR USB 3.0 VERSION Note: USB3.0 is compatible with USB2.0	CODING POSITION: **A:** coding A **B:** coding B * The coding can be changed on the receptacle counter part using our tool USBFODE	**64** CAPACITY FOR USB3FTV KEY: 8 | 16 | 32 | 64 | 128 | 256 Other capacity, please consult us at **contact@usbfield.com**	PLATING: **"N":** nickel plating **"G":** olive drab cadmium **NB:** please check the plating of your USBFTV receptacle	**Cap:** with cap **Blank:** without cap

EXAMPLE: **USBFTVKEY6A4096N:** USBFTV KEY – CODING A – CAPACITY OF 4096MB – NICKEL PLATING
EXAMPLE: **USB3FTVKEY6A64GCAP:** USBFTV KEY – CODING A – CAPACITY OF 64GB – OLIVE DRAB CADMIUM PLATING - PROTECTIVE CAP
NB: PRODUCT SUGGESTED TO ELECTRONIC CHANGES DEPENDING ON OUR ELECTRONIC SUPPLIERS, NEW CAPACITIES, OBSOLESCENCE

Reinforced USB Memory Keys

We provide reinforced USB memory keys available in different capacities. When mated, the system is IP68. Shells are metallic with 1/4 turn bayonet coupling. It provides a full protection of the data stored into the keys when the cap is closed. For full data protection during data transfers, check our USBFTV memory keys.

IMPORTANT NOTE
Compatible with any standard USB port

Environmental protection

- Sealing: IP68 (when closed)
- Salt spray: 48 h with nickel plating (ROHS)
  > 96 h with black coating (ROHS)
  > 500 h with olive drab cadmium
- Vibrations: MIL-STD-810F method 514.5 fig 514.5.C cat 14
- Temperature range: - 40°C / +85°C (MIL-STD-810F)

Other features

- Type: USB2.0
- Voltage: 5V DC - 500 mA max
- Electromagnetic compatibility: 89/336/EEC and Part 15 Class B

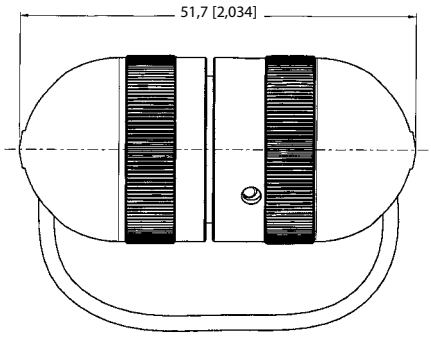

Up to memory size 8GB

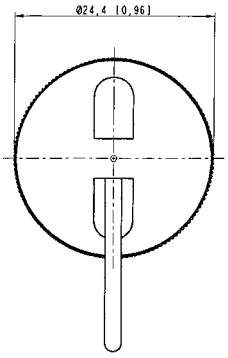

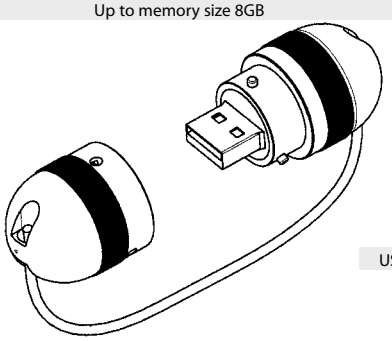

Rugged Metallic USB KEY with CAP SEALING: IP 67

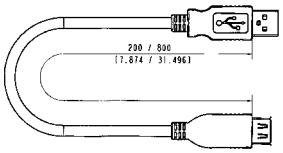

USB cordset is included with each memory key

Note: Our rugged memory keys are sold under standard electronic manufacturer configuration for data storage.
If, for your own usage, you need to re-configurate the electronic (under Linux for example), it will be under customer responsibility.
Amphenol is not responsible for any wrong doing or misguided use of the product by its customers. Under request, we can provide you with electronic manufacturer details so you can check if their specific configuration will work with the electronic (please specify memory capacity).
Amphenol can also study the integration of electronic selected by a customer. In order to do so, we need to received a sample of the USB memory stick so we can study its integration into our existing concept or adapt it.
Please send your requests to contact@usbfield.com

DEFINITION OF PART NUMBER

USBF KEY	4096	N
Beginning of every USB Key part number. Remains unchanged.	**Capacity of your USBF Key:** 4096 | 8192 Other capacity, please consult us at **contact@rjfield.com**	**Shell finish:** **N:** Nickel **G:** Green **B:** Black

* GT: Fast Data Transfer
EXAMPLE: **USBFKEY4096N:** USB MEMORY KEY - CAPACITY OF4096MB - SHELL FINISH: NICKEL
EXAMPLE: **USBFKEY8192G:** USB MEMORY KEY - CAPACITY OF 8192MB - SHELL FINISH: GREEN

Reinforced USB Amplifier

NEW

ROHS COMPLIANT N

We provide USB amplifier if your need exceeds 5 meters up to 10 meters (16.40 up to 32.80 ft].

This product is subject to custom design. For more information, please consult us.

Jam nut receptacle Ampli with cable reinforced PU jacket open

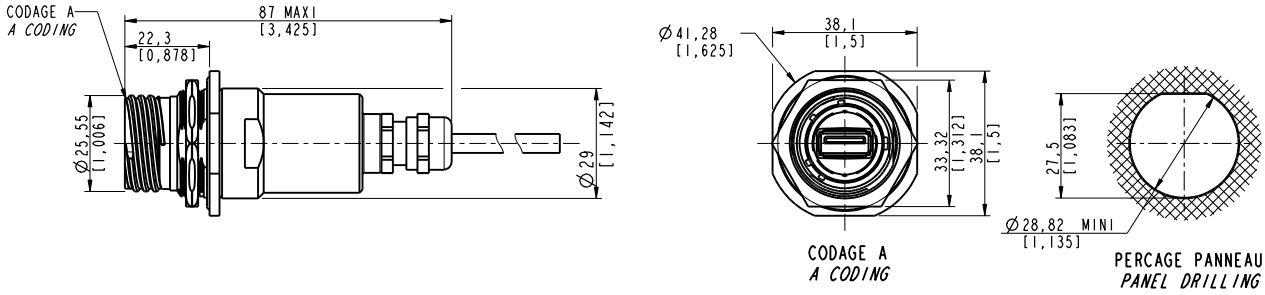

Amphenol

USB amplifier selection guide

Define your own solution by selecting options in the scheme below

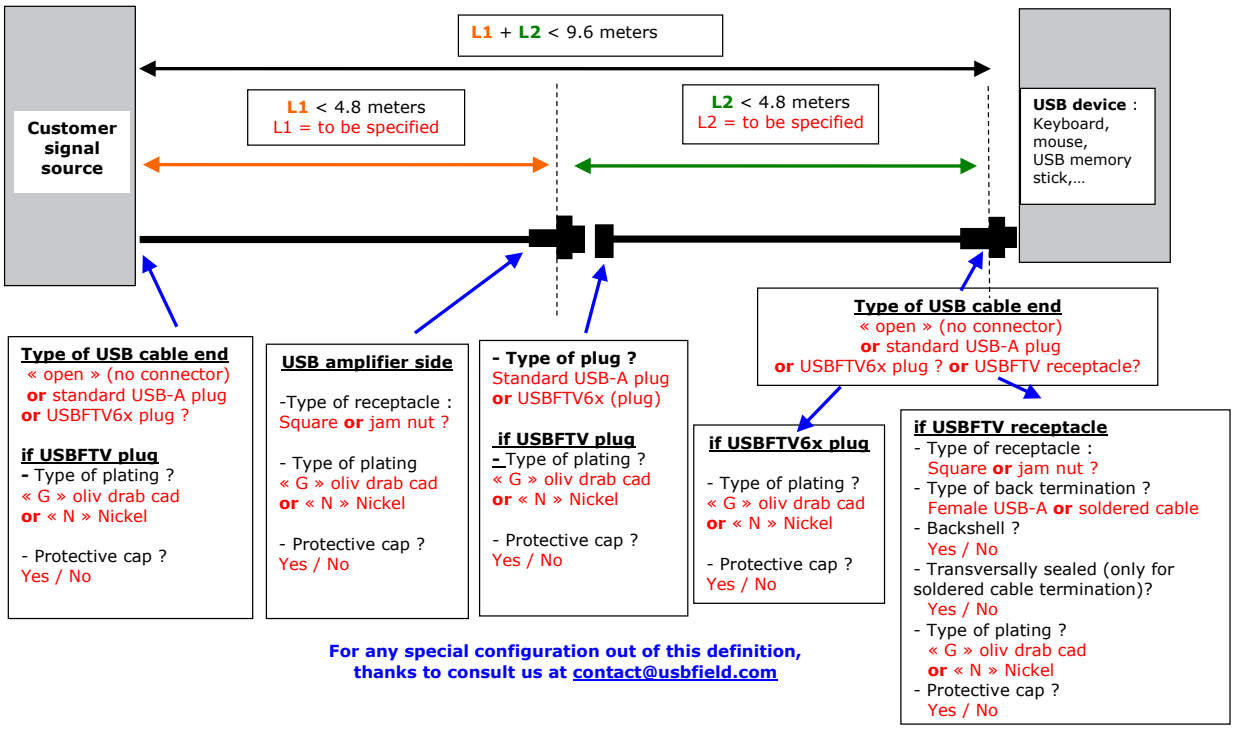

For any special configuration out of this definition, thanks to consult us at contact@usbfield.com

Rugged ATEX Zone 2 solutions

Table of contents

RJFTVX, USBFTVX, RJ11FTVX 132

RJSPCEX ATEX ZONE 2 Rugged & IP68 sealed Ethernet switch 138

RJFTVX, USBFTVX, RJ11FTVX

RJ45, USB, RJ11/12 explosion proof solutions for **Zone 2**

Amphenol Atex Field Bus range is designed for device group II category 3G. According to EN60079-15 it may be operated within zone 2 and class I, Division 2, as low power non sparking connectors.

RJFTVX • Rugged and sealed RJ45 connector

RJFTVX allows you to use an Ethernet Class D / Cat. 5e connection for 10 BaseT, 100 BaseTx or 1000 BaseT networks in ATEX zone 2 environments. With the patented RJStop system you can use a standard RJ45 cordset in a metallic plug which will protect it from shocks, dust and fluids. RJFTVX features the same main characteristics than RJFTV series (see page 26).

Plug

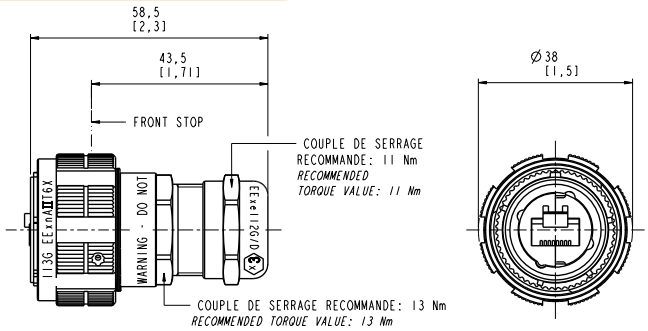

Part number	Plating	Plug	IP68 metallic cap
	Nickel	**RJFTVX6MN**	**RJFTVC6N**
	Olive drab cadmium	**RJFTVX6MG**	**RJFTVC6G**

Characteristics

Ex marking	II3G ExnAIIT6 X
Operating temperature range	-40°C / +60°C
Voltage	60 Veff max
Power	20 W max
Outside cable diameter	6mm to 12mm
Sealing	IP68
Data transmission	10 BaseT, 100 BaseTX & 1000 BaseT networks. Cat. 5e per TIA/EIA 568B & Class D per ISO/IEC 11801

Square flange receptacle

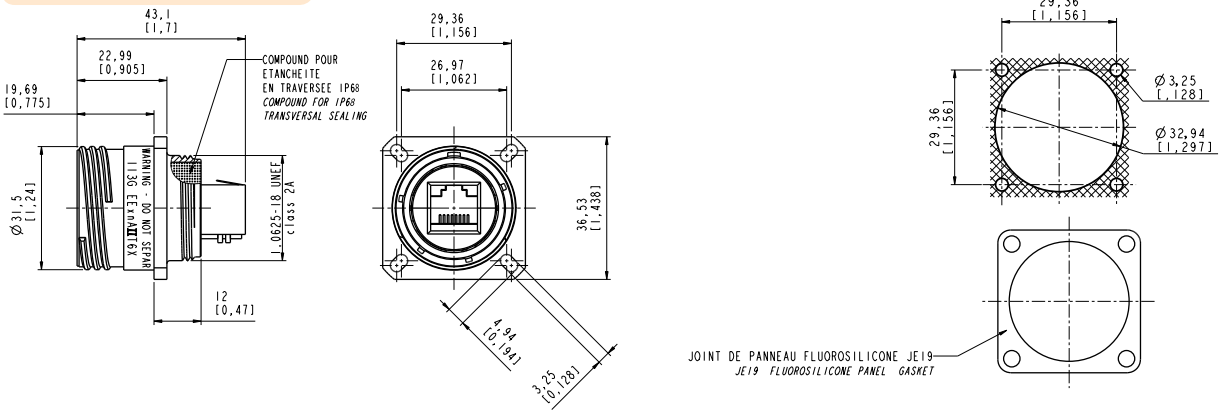

Part number	Plating	Receptacle, RJ45 back termination, coding A	Receptacle cap
	Nickel	**RJFTVX2SA1N**	**RJFTVC2N**
	Olive drab cadmium	**RJFTVX2SA1G**	**RJFTVC2G**

Jam nut receptacle

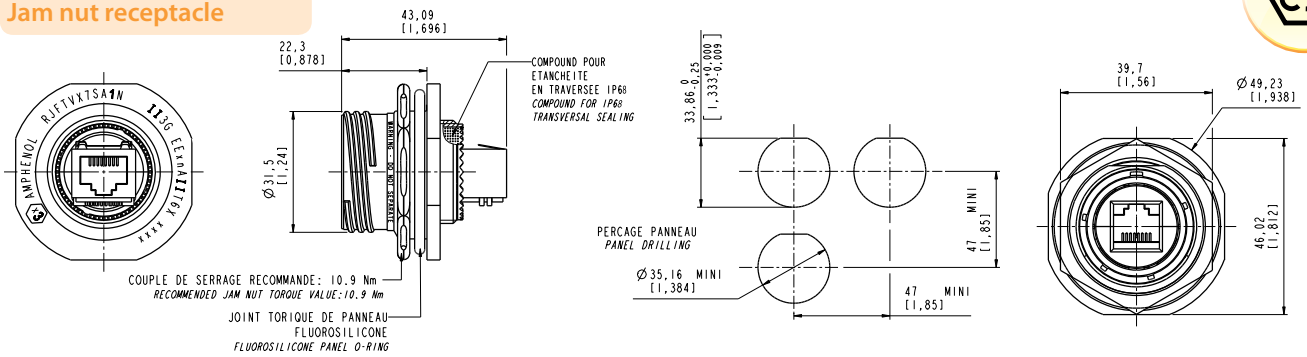

Part number	Plating	Receptacle, RJ45 back termination, coding A	IP68 metallic cap
	Nickel	**RJFTVX7SA1N**	**RJFTVC7N**
	Olive drab cadmium	**RJFTVX7SA1G**	**RJFTVC7G**

REMARK: As receptacles are compounded (IP68 transversally sealing), coding position has to be specified in the part number : A (standard), B, C or D

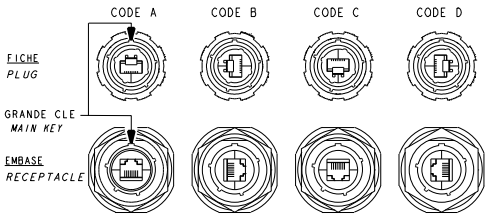

Receptacles can be provided with RJ45 cordsets.
There are 4 standard lengths as described hereunder *(with coding "A")*:

Part number	Nickel plating	Olive drab cadmium plating	RJ45 cordset length *Meters*
	RJFTVX2SA2**N**03100BTX	RJFTVX2SA2**G**03100BTX	0.3
	RJFTVX2SA2**N**05100BTX	RJFTVX2SA2**G**05100BTX	0.5
	RJFTVX2SA2**N**10100BTX	RJFTVX2SA2**G**10100BTX	1.0
	RJFTVX2SA2**N**15100BTX	RJFTVX2SA2**G**15100BTX	1.5

Part number code

Series **RJ Field TV**	**RJF TVX**	**7S**	**A**	**2**	**N**	**05 100BTX**
Shell Type **2S:** Square flange receptacle **7S:** Jam nut receptacle **6M:** Plug						
Coding **"A" (Standard) or "B", "C", "D"**						
Back Terminations (for receptacles only) **1:** Female RJ45 **2:** RJ45 cordset						
Shell Material and Finish: **N:** Nickel **G:** Olive drab cadmium						
Cordset length (for receptacles with "2" back termination only) **03 100BTX:**30 cm [11.81 inches] **05 100 BTX:**50 cm [19.68 inches] **10 100 BTX:**1 meter [39.37 inches] **15 100BTX:** 1,5 meters [59.04 inches]						

USBFTVX • Rugged and sealed USB connector

With USBFTVX, you can insert a standard USB 2.0 cordset into a metallic plug which will protect it from shocks, dust and fluids. This range is fitted to be used in Atex zone 2 environments.
This metallic plug is connected into a receptacle, using a Tri Start thread coupling mechanism (MIL-DTL-38999 series III type) with anti-decoupling device for high vibrations.
USBFTVX features the same main characteristics than USBFTV series (see page 76).

Characteristics

Ex marking	II3G ExnAIIT6 X
Operating temperature range	-40°C / +70°C
Voltage	60 Veff max
Power	20 W max
Outside cable diameter	4mm to 6mm
Sealing	IP68
Data transmission	USB 2.0 up to 480 Mb/s

Plug

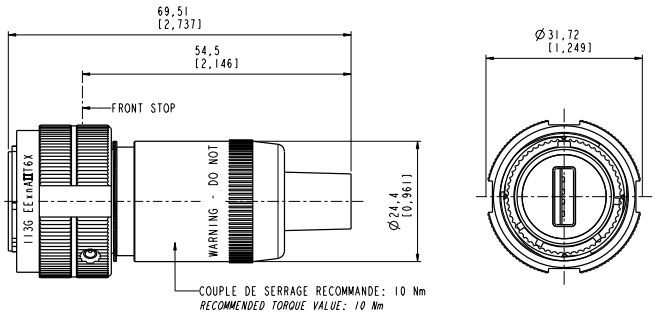

Part number	Plating	Plug	IP68 metallic cap
	Nickel	**USBFTVX6N**	**USBFTVC6N**
	Olive drab cadmium	**USBFTVX6G**	**USBFTVC6G**

Square flange receptacle

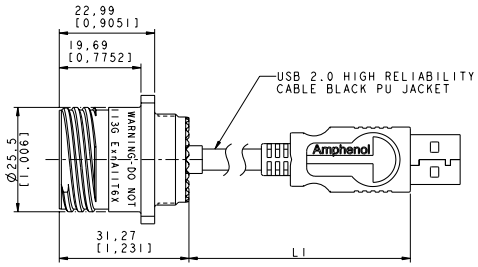

Cable end Type "A" (Standard USB "A" Plug)

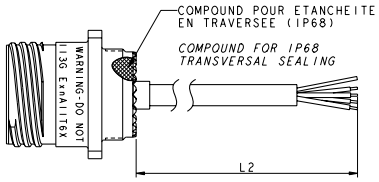

Cable end Type "OPEN" (No connector)

Jam nut receptacle

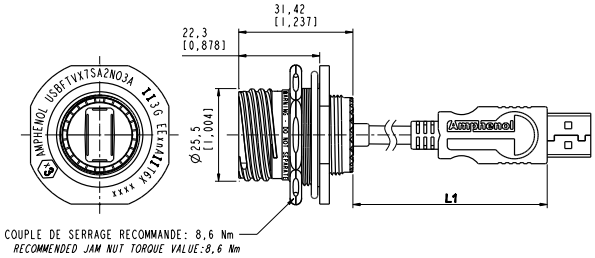

Cable end Type "A" (Standard USB "A" Plug)

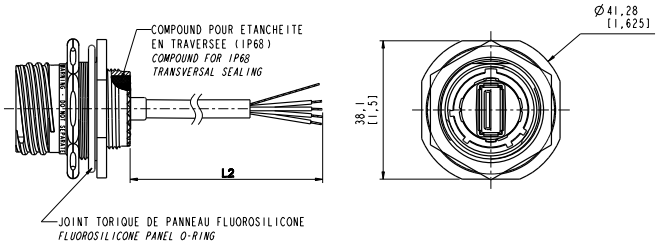

Cable end Type "OPEN" (No connector)

Part number code

Series **USB Field TV**	**USBF TVX**	**2S**	**A**	**2**	**N**	**03**	**A**
Shell Type **2S :** Square flange receptacle **7S:** Jam nut receptacle							
Coding **"A" (Standard) or "B"**							
Back Terminations **2:** Rugged USB cable							
Shells Plating **N:** Nickel **G:** Olive drab cadmium plating							
USB cable length **03:** 30 cm [11.81 inches] **05:** 50 cm [19.68 inches] **10:** 1 meter [39.37 inches]							
USB cable end **A:** Standard USB-A plug **OPEN:** Open cable (no connector)							

CAPS for receptacles :

	Plating	Cap for square flange receptacle	Cap for jam nut receptacle
Part number	Nickel	**USBFTVC2N**	**USBFTVC7N**
	Olive drab cadmium	**USBFTVC2G**	**USBFTVC7G**

RJ11FTVX • Rugged and sealed RJ11/12 connector

RJ11FTVX allows you to use a standard phone RJ11/RJ12 connection in Atex zone 2 environments.
With the patented RJStop® system you can use a standard RJ11 / RJ12 cordset in a metallic plug which will protect it from shocks, dust and fluids.

Characteristics

Ex marking	II3G ExnAIIT6 X
Operating temperature range	-40°C / +60°C
Voltage	60 Veff max
Power	20 W max
Outside cable diameter	4mm to 5.5mm
Sealing	IP68
Coupling mechanism	Tri Star thread with anti-decoupling device (MIL-DTL-38999 series III)
Mating cycles	500 min
Salt spray	48h with nickel plating / 500 h with oliv drab cadmium plating
Coding	4 mechanical user-defined coding / Polarization settings (insert rotation)
Fire retardant / Low smoke	UL94 V0 and NF16 101 & 16 102
R11 cordset retention in the plug	100 N in the Axis

Plug

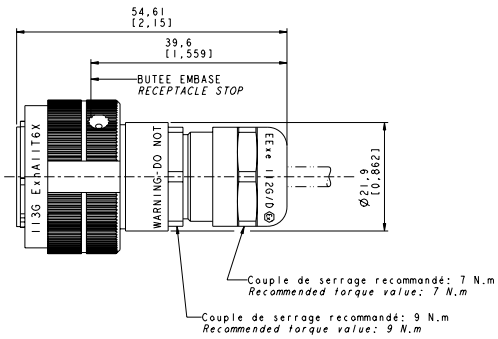

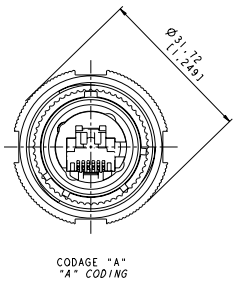

Part number	Plating	Plug	Cap
	Nickel	**RJ11FTVX6MN**	**RJ11FTVC6N**
	Olive drab cadmium	**RJ11FTVX6MG**	**RJ11FTVC6G**

Square flange receptacle

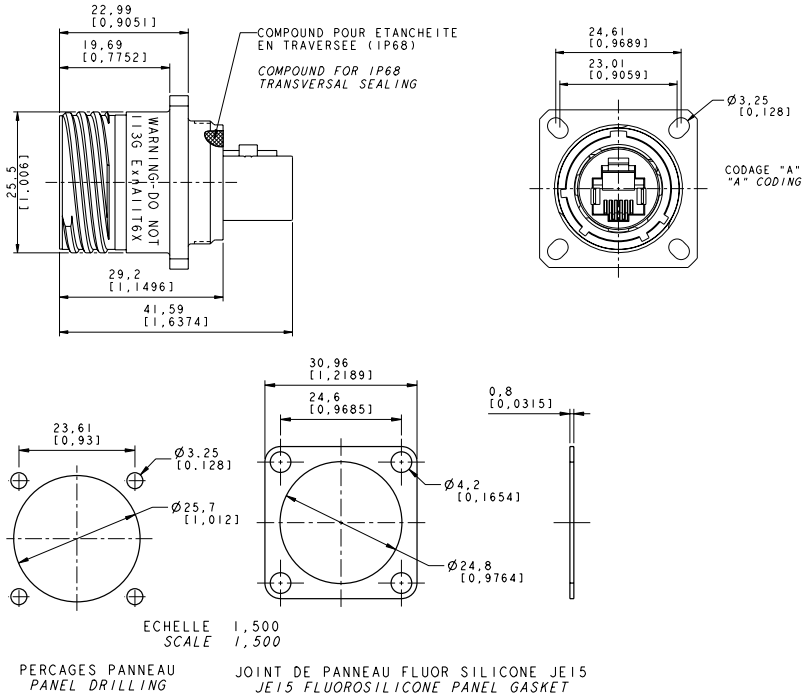

Part number	Plating	Receptacle - Female RJ11 back termination - Coding A	Receptacle cap
	Nickel	**RJ11FTVX2SA1N**	**RJ11FTVC2N**
	Olive drab cadmium	**RJ11FTVX2SA1G**	**RJ11FTVC2G**

Jam nut receptacle

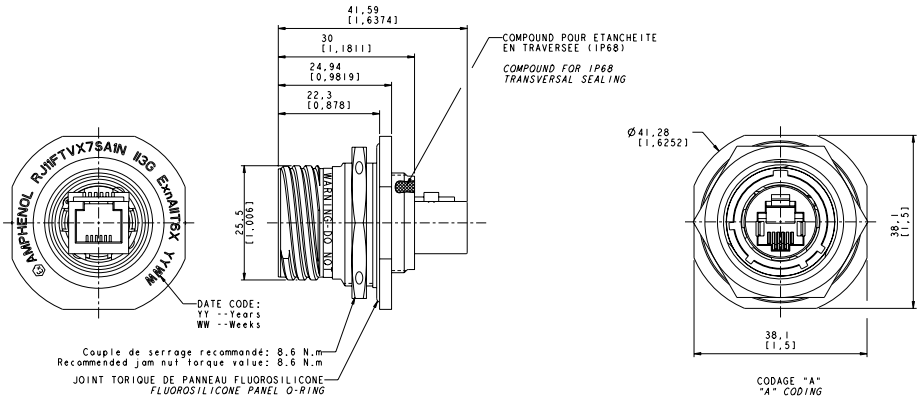

Part number	Plating	Receptacle - Female RJ11 back termination - Coding A	Receptacle cap
	Nickel	**RJ11FTVX7SA1N**	**RJ11FTVC7N**
	Olive drab cadmium	**RJ11FTVX7SA1G**	**RJ11FTVC7G**

REMARK: As receptacles are compounded (IP68 transversally sealing), coding position has to be specified in the part number : A (standard), B, C or D
(connection side views)

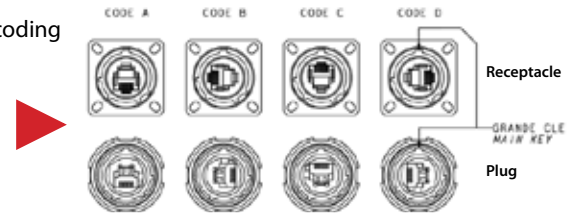

RJSPCEX ATEX ZONE 2 RUGGED & IP68

Sealed ethernet switch

This Ethernet Switch is a combination of rugged packaging with locking device for Zone 2 hazardous location, with fault-tolerant network redundancy.

Industrial Applications

- Oil & Gas
- Process Control
- Factory Automation

Outstanding features

- IP65/68 Sealing
- ATEX Zone 2II3G ExnAII T4X (EN60079-15 & EN60079-0)
- Plug and Play simplicity
- Ring redundancy
- Operating temperature: -40°F to 170°F (-40°C to +75°C)

Key Features

- Ring Switch Networking Features (managed features available!)
  - Real-Time Ring for ultra-fast fault-tolerant loops
    - Recovery time of 30 ms + 5 ms per hop!
  - Modbus monitoring over Ethernet
    - Ideal for deterministic systems and PLCs
  - Real-time traffic prioritization (QoS and CoS)
    - Assure delivery of real-time data
    - Improve network utilization
    - User settable priority assignments
  - Advanced switch features
    - User configurable port settings
    - Port mirroring for traffic diagnostics
    - Pre-configurable for Plug-And-Play simplicity

P/N: RJSPC-EX-5ES1-PLG-CAPS

Note: this part number includes:

- One ATEX Zone 2 IP68 Plug and Play Ethernet switch equipped with caps on Ethernet connectors
- One power plug equipped with anti decoupling nut
- Five Ethernet plugs equipped with anti decoupling spring

P/N: RJSPC-EX-5RS1-PLG-CAPS

Note: this part number includes:

- One ATEX Zone 2 IP68 RING Ethernet switch equipped with caps on Ethernet connectors
- One power plug equipped with anti decoupling nut
- Five Ethernet plugs equipped with anti decoupling spring

Description (example for Ring model)

- Waterproof IP68 Rating (NEMA 6)
- Reduced Installation Costs with the patented RJStop® system
- Use any standard RJ45 cordset
- Rugged Enclosure in Polyester reinforced with 30% glass fiber
- Redundant power inputs with surge/spike protection
- Ultra reliable 1,000,000 hours Mean Time Between Failure *(MTBF)*
- Zone 2 hazardous location (models RJSPC-EX)

1. LEDs indicating activity, link status, datarate (10/100 Mbps)
2. LED indicating ring status
3. 5 rugged IP68 RJ Field Ethernet ports
4. Real-time ring feature
5. IP68 polyester enclosure reinforced with glass fiber
6. OK power & ring status
7. LEDs indicating power
8. Anti-decoupling nut for power plug
9. Anti-decoupling spring for ethernet plugs

Other rugged solutions

Field installable

Table of contents

FWFTV 140
Self Closing Cap for IEEE1394 receptacles 143
RJ11F 144
NEW Special RJ11 Military & Commercial Aeronautics 146
MTRJF TV 148
LC Field 150

FWF TV

IEEE 1394A Connection System for Harsh Environments

With FW Field, you can insert a standard IEEE1394A cordset into a metallic plug which will protect it from shocks, dust and fluids.
No hazardous on-field cabling and grounding!
This metallic plug is connected into a receptacle, using a Tri Start Thread coupling mechanism (MIL-DTL-38999 series III type) with anti-decoupling device for high vibrations.

Applications

- Embedded Computers
- Video
- Railways
- Battelfield Communication Systems
- Naval & Shipboard Systems
- Robotics & Automation
- Process Control
- Rugged Communications

Main characteristics

- No assembly tools required
- Sealed against fluids and dusts (IP68)
- No time-consuming in-field cabling operation necessary
- **Tri-start thread coupling mechanism (MIL-DTL-38999 series III type) with anti-decoupling device**
- FW plug retention in the receptacle: 100 N in the axis
- Mating cycles: 500 minimum
- Improved EMI protection

Environmental Protection

- Sealing (mated): IP68 (Temporary immersion - 1 meter up to 30 minutes)
- Salt Spray: 48 h with Nickel plating
  > 500 h with Olive Drab Cadmium
- Fire Retardant / Low Smoke: UL94 V0 and NF F 16 101 & 16 102
- Vibrations: 10 – 500 Hz, 10 g, 3 axes: no discontinuity > 1micro s
- Shocks: IK06: weight of 250 g drop from 40 cm [15.75 in] onto connectors (mated pair)
- Humidity: 21 days, 43°C, 98% humidity
- Temperature Range: - 40°C / +85°C

Data Transmission

IEEE 1394a-2000
400 Mbits/second over 4.5 meters

Part Number Code

Series **IEEE1394 Field TV**	**FWF TV**	**2**	**1**	**G**
Shell Type **6:** Plug **2:** Square Flange Receptacle **2PE:** Square flange receptacle with metal backshell *(type 1)* & with metal backshell + plastic gland *(type 2)* **7:** Jam Nut Receptacle **7PE:** Jam nut receptacle with metal backshell *(type 1)* & with metal backshell + plastic gland *(type 2)*				
Back Terminations *(Receptacles only)* **1:** IEEE 1394 receptacle **2:** Solder Board (6 tinned holes)				
Shell Plating **N:** Nickel - ROHS Compliant **G:** Olive Drab Cadmium				

Examples:
- Olive Drab Cadmium Plug: FWF TV 6G
- Olive Drab Cadmium Square Flange Receptacle, IEEE 1394 front & back: FWF TV 21G
- Olive Drab Cadmium Jam Nut Receptacle, IEEE 1394 front and back: FWF TV 71G
- Nickel Jam Nut Receptacle, solder board termination: FWF TV 72N

Plug

■ Shell type 6

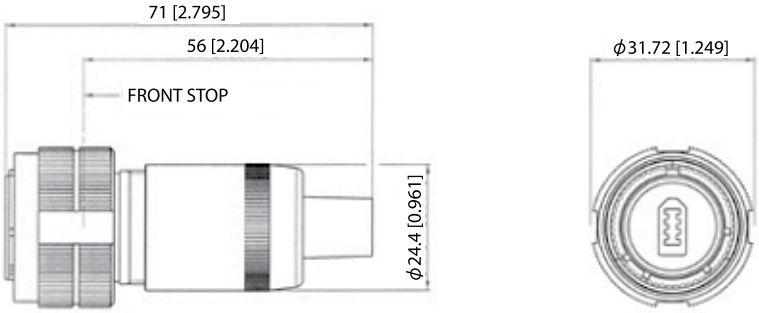

FWF TV 6 X

Receptacles

■ Square flange receptacle
4 mounting holes: Shell type 2

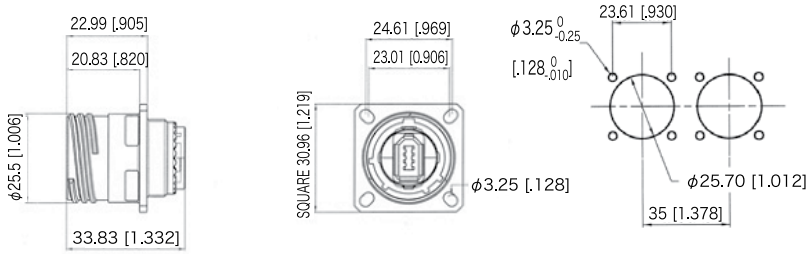

FWF TV 2 XX

Panel Drilling

■ Jam nut receptacle
Hexagonal Nut mounting: Shell type 7

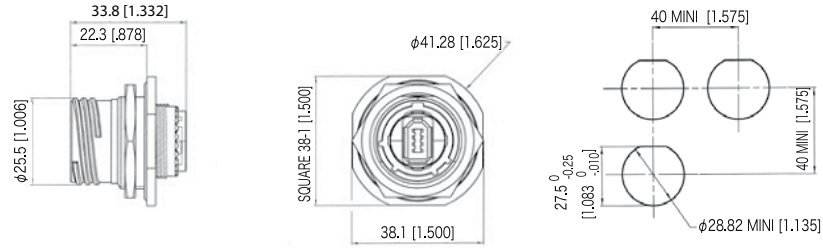

FWF TV 7 XX

Panel Drilling

■ Receptacles with backshell:
Shell type 2PE and 7PE

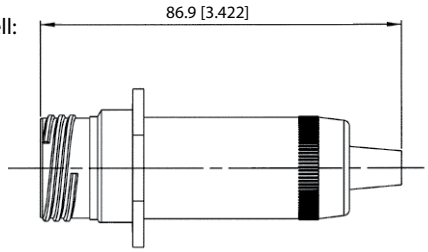

Backshell used with IEEE 1394
Receptacle with back-termination - (Type 1)
Non sealed version
Same panel drilling as FWFTV 2xx

FWF TV 2PE & 7PE Type 1

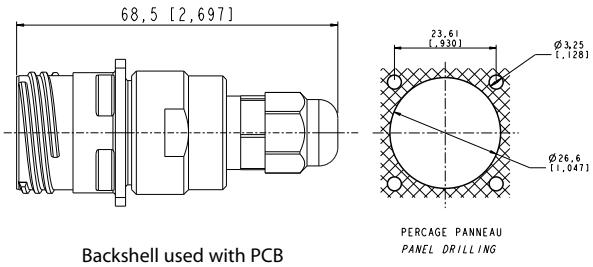

Backshell used with PCB
Receptacle with back-termination - (Type 2))
Sealed version - IP67

FWF TV 2PE & 7PE Type 2

Panel Drilling *(for type 2 only)*

Back Terminations

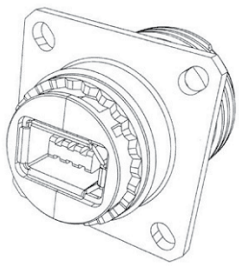

Type 1: IEEE 1394 Receptacle

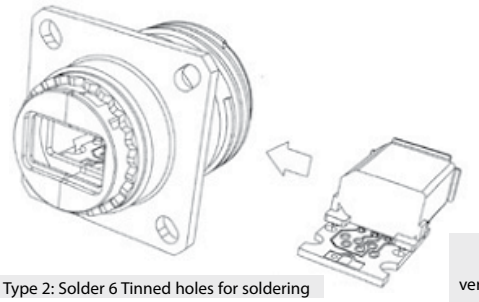

Type 2: Solder 6 Tinned holes for soldering

View of the PCB Type 2 version - with 6 tinned holes for solder termination

Amphenol

Assembly Instructions

Can be used with most IEEE 1394 cordset brands: No tools required!

Plug Assembly

1. If a fully sealed (IP68) assembly is required: Install the white tape around the plug to cover the 4 holes of the overmolding. If there are no holes omit this step.

2. Insert the black O Ring around the front face of the IEEE 1394 plug. This O Ring will ensure the seal.

3. Insert the IEEE 1394 cordset into the metallic backshell.

4. Insert the retention spacer laterally onto the cable (this spacer is soft so as to adapt to various overmolding styles) and slide the IEEE 1394 plug into this retention spacer.

5. Insert the friction ring laterally onto the cable cordset.

6. Insert the IEEE 1394 plug into the metallic circular shell. Note at this step that the main key is used for polarization.

7. Screw the backshell on the plug body. A spanner may be required to fully close the backshell to the circular shell.

Important Note: The sealing of the connector is not done by the black retention spacers which are slotted, but rather by the front face O-Ring (Fig 2).

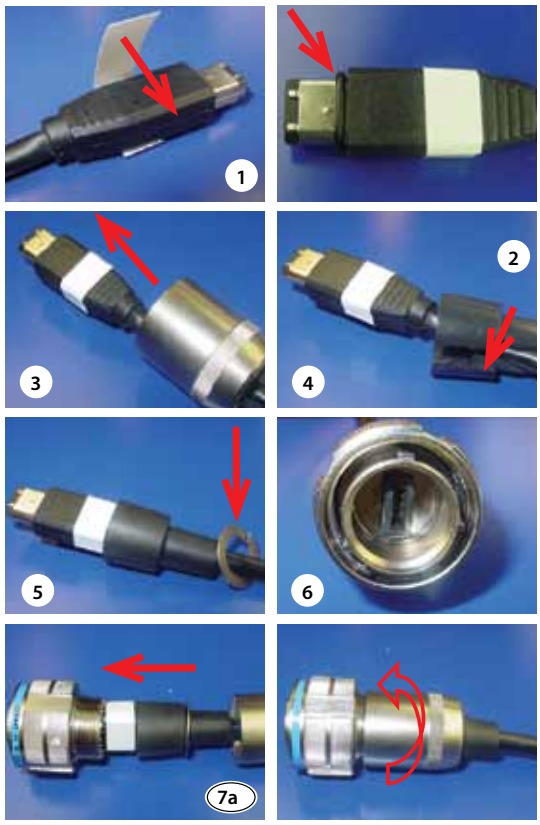

Receptacle Assembly

To Solder your cable onto the PCB:

1. Attach the 2 metallized plastic inserts around the PCB (Fig 1a & 1b).
2. Insert the IEEE 1394 module from the rear of the connector.

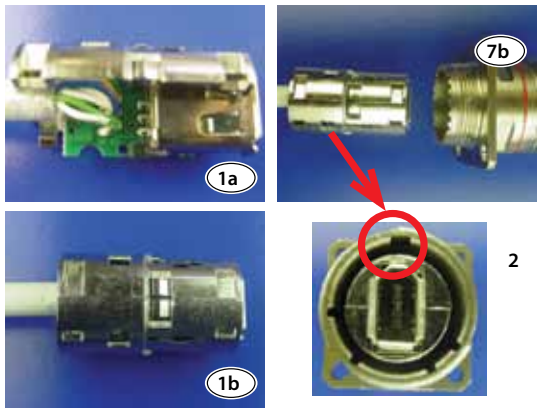

Removing Modules

1. Insert the removal tool FWF ODE from the front
2. Push the module back with thumb.

Accessories

- **Metallic Caps**

	FWF TVC	2	G
Connector Type			
6:	Plug		
2:	Square Flange Receptacle		
7:	Jam Nut Receptacle		
Shell plating			
N:	Nickel - ROHS Compliant		
G:	Olive Drab Cadmium		

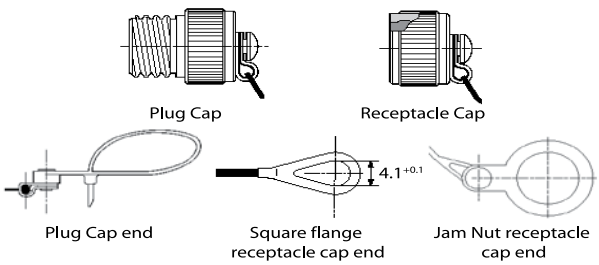

- **Panel Gasket** for square flange receptacle (Thickness: 0,8 mm [.031]): JE15

- **Receptacle Insert removal tool**: FWF ODE

IEEE1394 Receptacle with Self Closing Cap

This Self Closing Cap automatically protects the IEEE1394 square flange receptacles (MIL-C-26482 type), protecting your system from dust and water projections. The same cap can be used to protect RJ45, USB and USBB receptacles. A spring automatically closes the upper part of the cap when either the RJ Field plug, RJ45 cordset, USB or IEEE1394 cordset, or USB key are removed from the receptacle.

FWF 21 X SCC

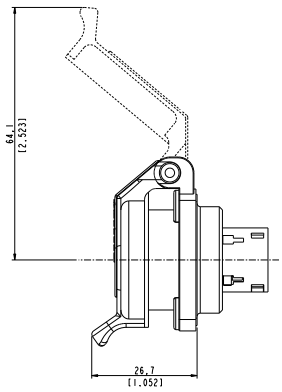

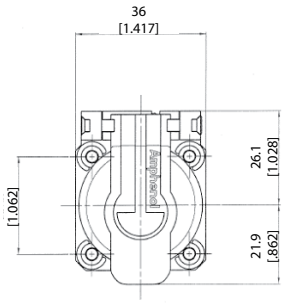

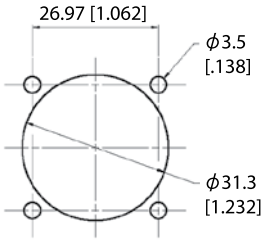

Panel Drilling

Version IEEE1394

		Plating	Metallized inserts (EMI)
Part number *	**FWF 21B SCC**	Black coated	No (blank insert)
	FWF 21N SCC	Nickel plated	Yes
	FWF 21G SCC	Olive drab cadmium plated	Yes

* The part number includes the receptacle + the self closing cap

■ **Note**: Panel gasket with any of these receptacles: **JE18**

RJF 21 X SCC, USBF 21 X SCC, USBBF 21 X SCC

RJ45 version

(see page 25)

USB2.0 & 3.0 - A version

(see pages 94 & 107)

USB-B version

(see page 118)

RJ11F

Rugged RJ11/RJ12 Connection System for Harsh Environment

RJ11Field allows you to use a standard phone RJ11 / RJ12 connection in harsh environments. With the patented RJStop® system you can use a standard RJ11 / RJ12 cordset in a metallic plug which will protect it from shocks, dust and fluids. No hazardous on-field cabling!

Applications

- Industrial applications
- Battlefield communication

Main characteristics

- **Bayonet coupling** ("Audible & Visual" coupling signal)
- **Robust metallic shells based on MIL-DTL-26482 H**
- 4 mechanical user-defined coding / Polarization settings (insert rotation)
- RJ11 cordset retention in the plug: 100 N in the axis
- Mating cycles: 500 min

Environmental Protection

- Sealing: IP68
- Salt Spray: 48 h with Nickel plating
  > 96 h with black coating
  > 500 h with Oliv Drab Cadmium
- Fire Retardant / Low Smoke: UL94 V0 and NF F 16 101 & 16 102
- Vibrations: 10 – 500 Hz, 10 g, 3 axes: no discontinuity > 10 nano s.
- Shocks: IK06: weight of 250 g drop from 40 cm [15.75 in] onto connectors *(mated pair)*
- Humidity: 21 days, 43°C, 98% humidity
- Thermal Shock: 5 cycles at - 40°C / +100°C
- Temperature Range: - 40°C / +85°C

Part Number Code

Series RJ11Field	RJ11F	2	2	B
Shell Type 6: Plug, Plastic Gland 2: Square Flange Receptacle 7: Jam Nut Receptacle				
Back Terminations (For Receptacles only) 1: Female RJ11 2: Solder (6 tinned holes)				
Shell Finishes B: Black Coating - ROHS Compliant N: Nickel - ROHS Compliant G: Olive Drab Cadmium				

Examples:
- Black Plug: RJ11F 6 B
- Black square flange receptacle, Female RJ11 Back termination: RJ11F 2 1 B
- Nickel Jam Nut Receptacle, solder termination: RJ11F 72 N

- Metallic cap

	RJ11FC	2	B
Connector Type 6: Plug 2: Square Flange Receptacle 7: Jam Nut Receptacle			
Finishes B: Black Coating - ROHS Compliant N: Nickel - ROHS Compliant G: Olive Drab Cadmium			

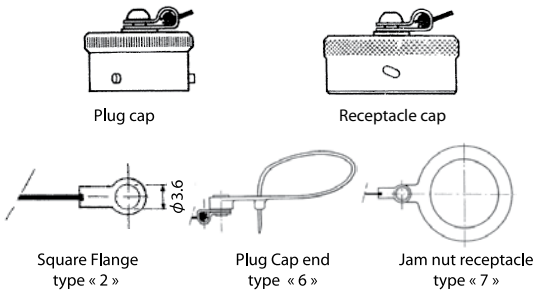

- Panel gasket for square flange « 2 » thickness: 0,6 mm
  P/N: JE 14

- Insert removal tool for receptacle and plug
  P/N = RJ11F ODE

Plug

■ Shell type 6 with Plastic Gland

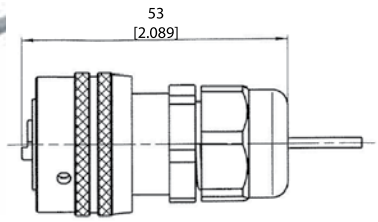

RJ11F 6 X

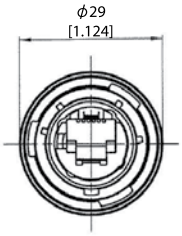

Receptacles

■ Square flange receptacle, 4 mounting holes: shell type 2

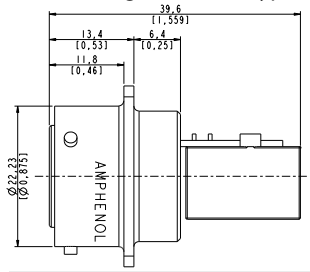

RJ11F 2 XX

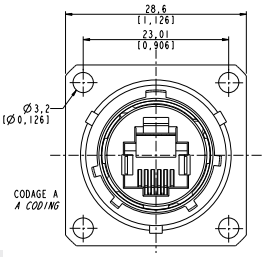

Panel Drilling

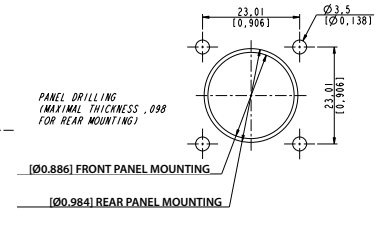

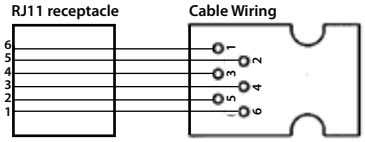

■ Jam nut receptacle, Hexagonal Nut mounting: Shell type 7

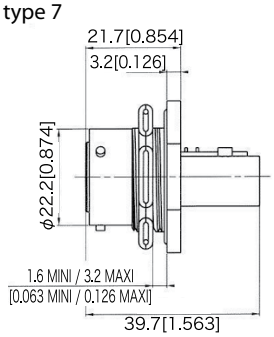

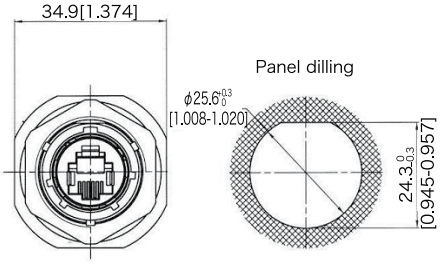

RJ11F 7 XX

Back terminations

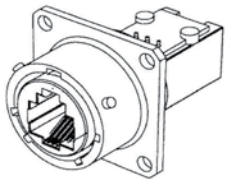

Type 1: Female RJ11 / RJ12

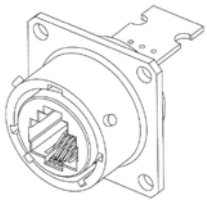

Type 2: Solder 6 Tinned through holes to solder your cable

Assembly instructions

Easy and Safe: No field cabling tools required

1. Pass the RJ11 / RJ12 plug through the plastic gland
2. Lateraly slide the insert on the cable
3. Fix the RJ11 / RJ12 plug in the insert , pushing on the lever
4. Insert in the metallic housing
5. Tighten the plastic gland

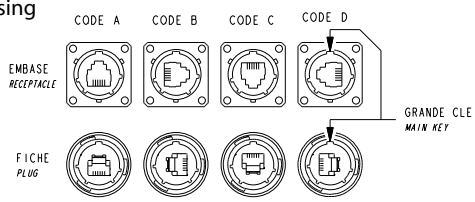

INSERTS CODING
Connection side views

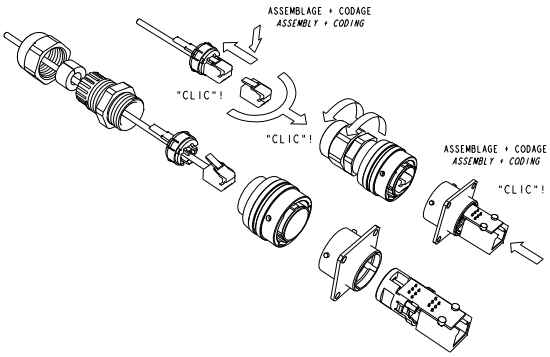

Special RJ11 adaptor

For Military & Commercial Aeronautics

NEW

RJ11 adaptor only

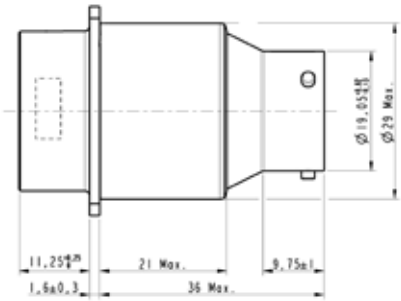

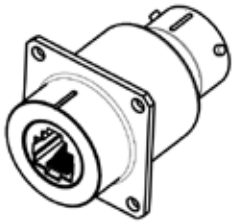

		Coding
Part number	35639	Y
	35641	W
	35643	Z
	35645	N

RJ11 adaptor + Self Closing Cap

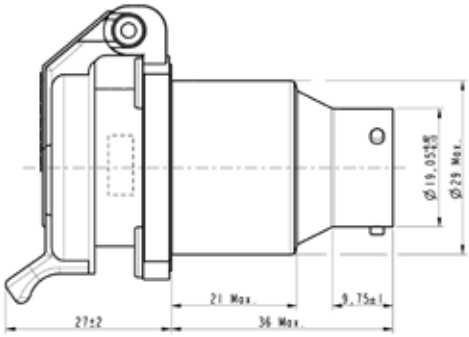

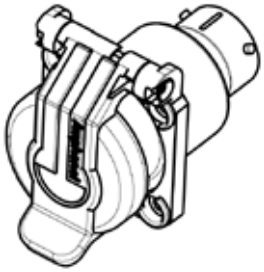

		Coding
Part number	35623	N
	35640	Y
	35642	W
	35644	Z

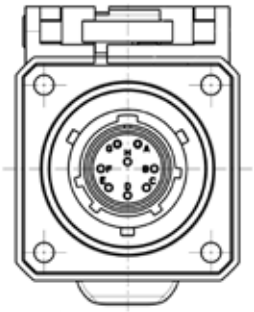

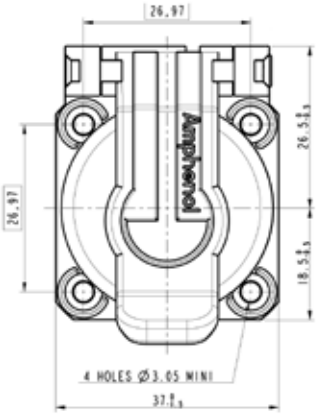

Amphenol

For all options:

Panel Drilling

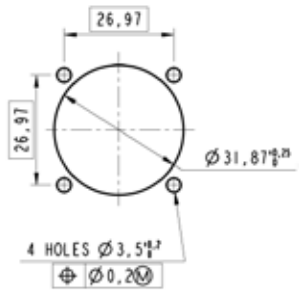

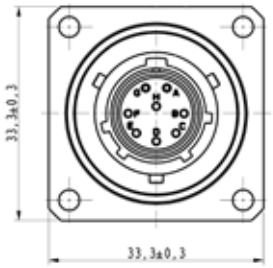

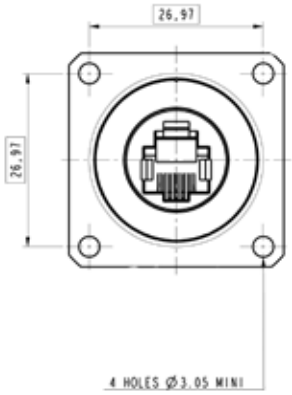

12-8 Male contact / EN3155

Coding N

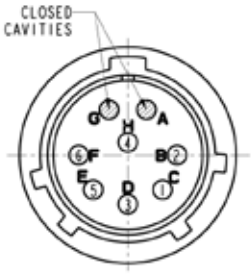

Coding W

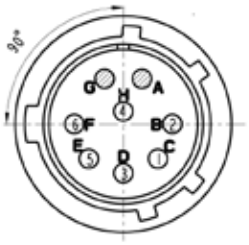

Coding Y

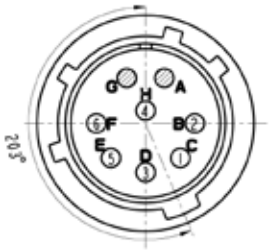

Coding Z

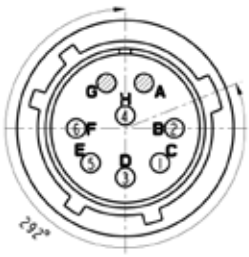

MTRJF TV

Transform your MTRJ patchcord into an Environmental Connector

With MTRJFTV you can use a standard MTRJ patchcord in a **metallic** plug which will protect it from shocks, dust and fluids.
No hazardous on-field cabling!

The MTRJ Field offers an easy system to upgrade from a standard to an environmental MTRJ.
- Sealed against fluids and dust (IP68)
- Shock, Vibration proof,
- No cabling operation in field and no tools required for installation

Applications
- Railways
- Base Station
- Military communication
- Navy

Mechanical characteristics
- Number of Channels: 2
- Typical Insertion Loss: 0,5dB in MM
- Durability: 500 mating/unmating cycles (changes for<0,2 dB)

Part Number Code

Serie	**MTRJF TV**	**6M**	**C**	**G**	**N**
MTRJ Field TV					
Shell Type					
6:	Plug with metal backshell, plastic PG clamp				
6M:	Plug with metal backshell and metal PG clamp				
2:	Square flange receptacle				
2PE:	Square flange, metal backshell and plastic PG clamp				
2PEM:	Square flange, metal backshell and metal PG clamp				
7:	Jam nut receptacle				
7PE:	Jam nut, metal backshell and plastic PG clamp				
7PEM:	Jam nut, metal backshell and metal PG clamp				
Cable Type					
Only for receptacle					
0:	Receptacle without backshell				
Only for plug					
C:	Mini round cable 2,8 mm				
D:	Flat duplex cable 1,6 mm				
S:	Duplex zipcord 1,6 mm				
T:	Flat duplex cable + Duplex zipcord for 1,6 mm - 2mm - 2,8mm				
Shell Finish					
N:	Nickel plated				
G:	Olive drab cadmium plated				
B:	Bronze				
D:	Black zinc cobalt				
Z:	Olive drab zinc cobalt				
Polarization					
N:	Normal				
A / B / C / D / E					

Cap Series	**B**	**EC**	**N**	**TV**	**W**	**13**
Protective cap type						
EC:	For square flange receptacle					
ER:	For jam nut receptacle					
F:	For plug					
Wire type						
N:	Nylon cord					
Blank:	Metallic chain					
TV:	Series					
Shell finish						
B:	Bronze					
F:	Electroless nickel plated, aluminium version					
W:	Olive drab cadmium plated, aluminium version					
D:	Black zinc cobalt					
Z:	Olive drab zinc cobalt					

Requested information to order MTRJ Field Patchcord

Plug MTRJ:	Male /Female
Type of fiber:	50/125, 62,5/125, 9/125
Patchcord length:	ex 10.5m
Drawing:	description of the product

Contact us for other configuration

Dismounting Tool Ordering Information
MTRJFTV DM TOOL

Line drawings *(Dimensions in mm)*

■ Plug (MIL DTL 38 999 series III Size 13)

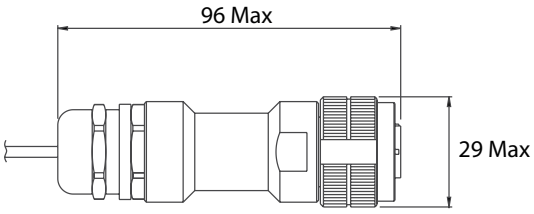

MTRJ FTV 6 X

■ Receptacle (MIL DTL 38 999 series III Size 13) with backshell

Jam Nut receptacle with backshell

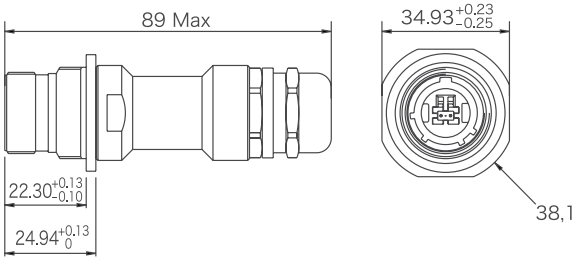

MTRJ FTV 7PE/7PEM

Square flange receptacle with backshell

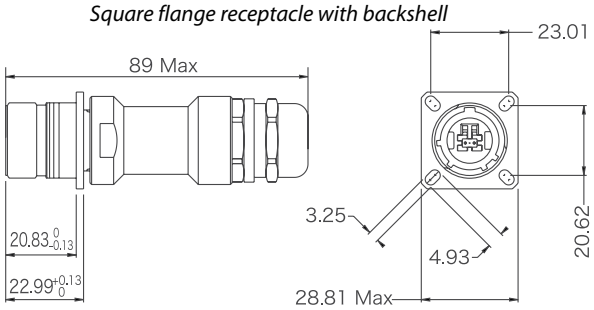

MTRJ FTV 2PE/2PEM

■ Square Flange Receptacle (MIL DTL 38 999 series III Size 13)

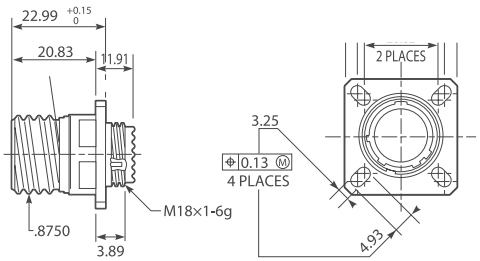

MTRJ FTV 2 XXX

Square flange receptacle rear panel mounting

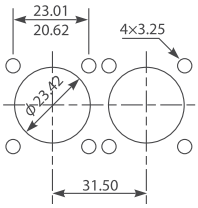

Square flange receptacle front panel mounting

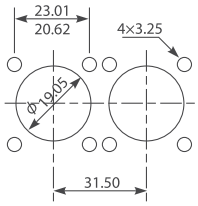

Panel Drilling

■ Jam Nut Receptacle (MIL DTL 38 999 series III Size 13)

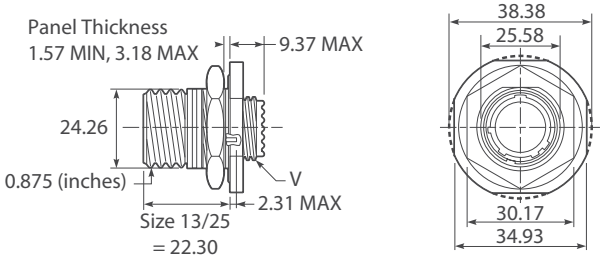

MTRJ FTV 7 XXX

Jam nut receptacle rear panel mounting

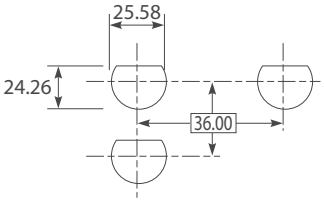

Panel Drilling

Protective caps

Protective cap for plug (nylon cord)

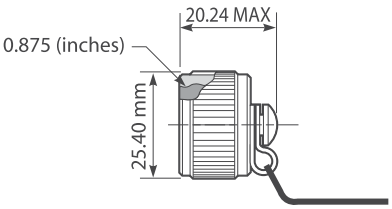

Protective cap for receptacles (nylon cord)

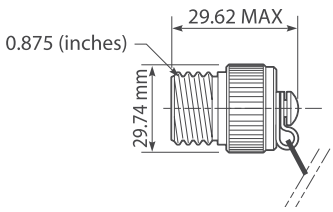

LC FIELD

Transform your LC patchcord into an Environmental Connector

The LC Field offers an easy system to upgrade from a standard to an environmental LC.

- Sealed against fluids and dust (IP68)
- Shock, Vibration proof
- No cabling operation in field and no tools required for installation (except 1,6mm and 2mm zipcord cable)

With the patented RJStop® system you can use a standard LC patchcord in a metallic plug which will protect it from shocks, dust and fluids.
No hazardous on-field cabling!

Applications

- Railways
- Base Station
- Military communication
- Navy

Mechanical characteristics

- Number of Channels: 2
- Typical Insertion Loss: 0,5dB in MM and SM
- Durability 500 mating/unmating cycles (changes for<0,2 dB)

Part Number Code

Serie Optical connector type	LCF TV	6M	D	G	N
Shell Type 6M: Plug with metal backshell and metal PG clamp 2: Square flange receptacle without backshell 7: Jam nut receptacle without backshell					
Cable Type Only for plug D: Flat duplex cable 1,6 mm E: Duplex zipcord 1,6 mm F: Flat duplex cable 2 mm G: Duplex zipcord 2 mm H: Flat duplex cable 2,8 mm I: Duplex zipcord 2,8 mm T: Flat duplex cable + Duplex zipcord for 1,6 mm - 2 mm - 2,8 mm Only for receptacle (no backshell available for receptacle) 0: Receptacle without backshell					
Shell Finish N: Nickel plated G: Olive drab cadmium plated B: Bronze D: Black zinc cobalt Z: Olive drab zinc cobalt					
Polarization N: Normal A / B / C / D / E					

Cap Series	B	EC	N	TV	W	19
Protective cap type EC: For square flange receptacle ER: For jam nut receptacle F: For plug						
Wire type N: Nylon cord Blank: Metallic chain						
TV: Series						
Shell finish B: Bronze F: Electroless nickel plated, aluminium version W: Olive drab cadmium plated, aluminium version D: Black zinc cobalt Z: Olive drab zinc cobalt						
Corresponding connector shell size: 19						

Requested information to order LC Field Patchcord

Type of connector: Male /Female
Type of fiber: 50/125, 62,5/125, 9/125
Patchcord length: ex 10.5m
Drawing: description of the product

Contact us for other configuration.

Tools informations

Mounting Tools:
LCFTV MO TOOL: LC FIELD Mounting tools

Dismounting Tools:
LCFTV DM TOOL: LC FIELD Dismounting tools
(To dismount the LC you need to use both dismounting and mounting tools)

Line drawings *(Dimensions in mm)*

■ Plug (MIL DTL 38 999 series III Size 19)

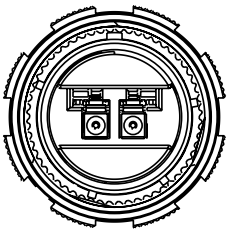

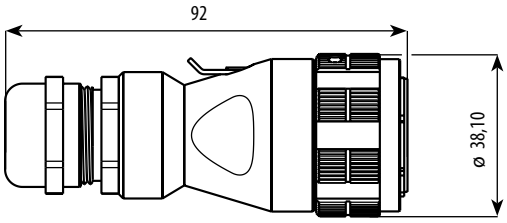

■ Square Flange Receptacle (MIL DTL 38 999 series III Size 19)

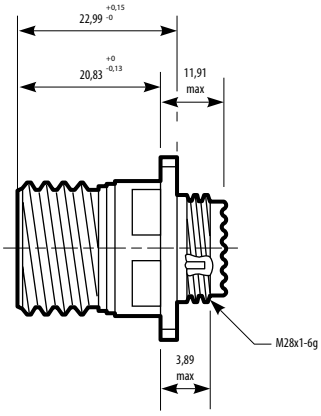

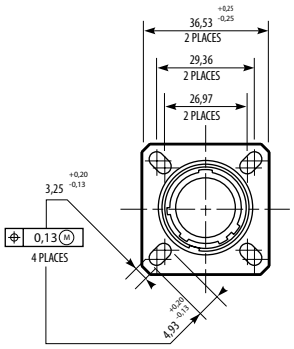

Square flange receptacle rear panel mounting

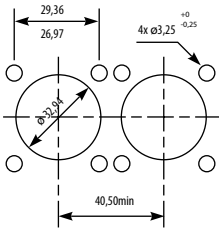

Square flange receptacle front panel mounting

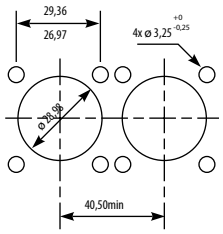

Panel Drilling

■ Jam Nut Receptacle (MIL DTL 38 999 series III Size 19)

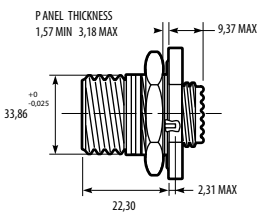

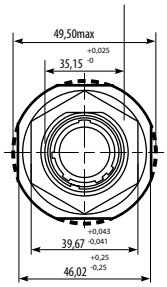

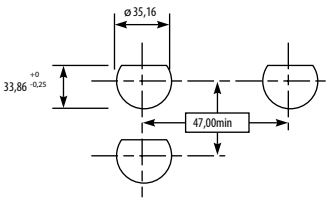

Panel Drilling

Jam nut receptacle rear panel mounting

Protective caps

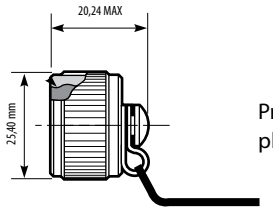

Protective cap for plug (nylon cord)

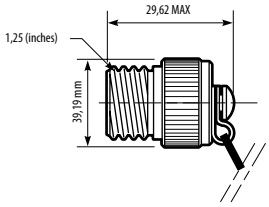

Protective cap for receptacles (nylon cord)

GLOSSARY

10BASE-T
10 Mbps Ethernet on twisted-pair (Category 3) cable.

100BASE-T
The twisted pair version of 100 Mbps Ethernet. Requires Category 5 cabling.

1000BASE-T
A recent LAN standard for implementing 1000 Mbps Ethernet on Category 5 cable. Also called Gigabit Ethernet.

Auto-MDIX
A protocol which allows two Ethernet devices to negotiate their use of the Ethernet Transmit (Tx) and Receive (Rx) cable pairs. This allows two Ethernet devices with MDI or MDI-X connectors to connect without using a cross-over cable.

Baud
A unit of measurement that denotes the number of bits that can be transmitted per second. For example, if a modem is rated at 9600 baud it is capable of transmitting data at a rate of 9600 bits per second.

Bandwidth
The maximum capacity of a network channel. Usually expressed in bits per second (bps). Ethernet channels have bandwidths of 10, 100, and 1000 Mbps (Gigabit).

bps
Bits Per Second is the unit used for measuring line speed, the number of information units transmitted per second.

Broadcast
A transmission initiated by one station and sent to all stations on the network.

Byte
The amount of memory needed to store one character such as a letter or a number. Equal to 8 bits of digital information. The standard measurement unit of a file size.

Category 5
A performance classification for twisted pair cables, connectors and systems. Specified to 100 MHz. Suitable for voice and data applications up to 155 Mbps.

Category 5 e
Also called Enhanced Category 5. A performance classification for twisted pair cables, connectors and systems. Specified to 100 MHz. Suitable for voice and data applications up to 1000 Mbps.

Category 6
A performance classification for twisted pair cables, connectors and systems.Specified up to 250 MHz.

CSMA/CD
Carrier Sense Multiple Access/Collision Detect. The Medium Access Control (MAC) protocol used in Ethernet.

Data rate
The speed of the data transmission, measured in bps (bits per second) or Mbps.

Duplex (Full, Half)
Full duplex is a communications method that allows for the simultaneous transmission and reception of data. In Half Duplex communication, transmissions and receptions can occur in either direction but not at the same time.

Ethernet
The most common network protocol in use. A protocol is a set of rules enabling data communications. Ethernet can operate over several different media including fiber optic, coaxial cable and twisted-pair cable.

IEEE 802.3
IEEE Working Group for CSMA/CD, the protocol used in Ethernet transmissions.

IGMP snooping
The ability of a switch to observe Internet Group Multicast Protocol (IGMP) traffic in order to learn IP Multicast group membership. The purpose is to restrict multicast transmissions to only those ports which have requested them.

LAN
Local Area Network. A network of directly-connected machines (located in close proximity), providing high speed communication over physical media such as fiber optics, coaxial cable, or twisted pair wiring.

MAC Address
A unique address assigned to a station interface, identifying that station on the network. With Ethernet, this is the unique 48-bit station address. Same as the physical address.

Megabit (Mb)
Megabit. One million bits of information, usually used to express a data transfer rate ; 1 Megabit/ second = 1Mbps.

Megabyte (MB)
MegaByte. A unit of data storage size which represents one million characters of information.

Multicast
A transmission initiated by one station to many stations of the network.

Port Mirroring
Port mirroring allows a switch port to monitor packets from any or all of its ports so that traffic can be analysed.

Quality of Service (QoS)
Some switches support QoS (per 802.1p and 802.1Q standards) whereby messages can be assigned levels of priority. QoS is important where time-critical applications can be impaired by data delays.

RJ45
8-position modular jacks used on twisted pair links for Ethernet cabling.

RJ-Field
A wide range of connectors which allow to reinforce and seal standard RJ45 cable. See www.rjfield.com

SNMP
Simple Network Management Protocol. This is THE standard used for switch management programs.

Spanning Tree Protocol (STP)
A link management protocol providing path redundancy and preventing network loops by defining a tree to span all switches in a network. It forces redundant data paths into a standby (blocked) state. If a path malfunction occurs, the topology is reconfigured and the link reestablished by activating the standby path.

TCP/IP
Transmission Control Protocol/Internet Protocol. A set of protocols, resulting from ARPA efforts, used by the Internet to support services such as remote login (TELNET), file transfer (FTP) and mail (SMTP).

TELNET
The Internet standard protocol for remote login (terminal connection) service. TELNET allows a user at one site to interact with a remote timesharing system at another site as if the user's terminal were connected directly to the remote computer.

VLAN
Virtual Local Area Network. A LAN that maps stations on a basis other than location such as by department, user type or application. Managing traffic, workstations, and bandwidth can be easier with a VLAN and improve network efficiency.

CABLE datas

	Category 5 (Cat5)	Category 5E (Cat5E)	Category 6 (Cat6)	Category 6a (Cat6a)	Category 6A (Cat6A)	Category 7 (Cat7)
Data rate	100 MBit/s	1 GBit/s	1 GBit/s	10 GBit/s	10 GBit/s	10 GBit/s
Frequency	100 Mhz	100 Mhz	250 Mhz	500 Mhz	500 Mhz 3db	600 Mhz
Twisted pairs	2 or 4 pairs	4 pairs	4 pairs	4 pairs (each pair invidually shielded)	4 pairs (each pair invidually shielded)	4 pairs (each pair invidually shielded)
Max lenght	100 m	100 m	55 m	100 m	100 m	100 m
Specification	ANSI/TIA-568-A 1-2001	TIA/EIA-568-5-A	ANSI/TIA-568-B. 2-**1**	ANSI/TIA-568-B. 2-**10**	ISO/IEC 11801 amendment 2	ISO/IEC 11801 2002 category7/ class F

NOTES

NOTES

Amphenol in the world

Amphenol Socapex

948, promenade de l'Arve BP29
74311 Thyez Cedex - France
Phone: +33 (0)4 50 89 28 00
contact@amphenol-socapex.fr
www.amphenol-socapex.com

www.twitter.com/AmphenolSocapex
www.linkedin.com/company/amphenol-socapex

Other Amphenol Sales contacts in Europe

Amphenol Air LB
10 rue champ Raymond
08110 Carignan - France
Phone: +33 (0)1 49 05 30 00

Amphenol AIR LB GmbH
Am Kleinbahnhof 4
66740 Saarlouis - Germany
Phone: +49 6831 981 00

Amphenol TUCHEL ELECTRONICS
August-Haeusser-Str. 10
D-74080 Heilbronn - Germany
Phone: +49 7131 929 00

Amphenol BENELUX
Zadelmaker 121
NL - 2401 PD Alphen aan den Rijn - The Netherlands
Phone: +31 172 444 903

Amphenol Limited Whitstable, UNITED KINGDOM
Thanet Way, Whitstable
Kent, CT53JF - United Kingdom
Phone: +44 1227 773 200

Amphenol ITALY
Via Barbaiana n.5
20020 Lainate - Milano - Italy
Phone: +39 293 254 214

Amphenol IBERICA
Edificio Burgosol, Oficina nr 55 - Comunidad de Madrid, 35-bis Las Rozas (Madrid) - Spain
Phone: +34 91 640 73 06

Amphenol NORDIC
Phone: +46 702 129 200 (Mil/Aero)
+46 76-790 95 60 (Industrial)

Amphenol POLAND & CENTER EAST EUROPE - *Austria, Poland, Czech Rep., Slovakia, Romania*
Wiener gasse 68 - 2380 Perchtoldsdorf - Austria
Phone: +43 699 10396 071

Amphenol SWITZERLAND & SOUTH CENTER
Switzerland, Slovenia, Serbia, Montenegro, Yugoslavia, Greece, Bulgaria
948, promenade de l'Arve BP29
74311 Thyez Cedex - France
Phone: +33 (0)4 50 89 28 40

Amphenol Sales contacts in Asia

Amphenol Daeshin
558 SongNae-Dong SoSa-Gu, Bucheon-city, Kyunggi-Do
Korea 420-130
Phone: +81-32 610 3830/3845

Amphenol East Asia Ltd.
No.72, Bendemeer Road,
#03-32/33, Luzerne
Singapore 339941
Phone: +65 6294 2128

Amphenol Interconnect India Private Limited
105 Bhosari Industrial Area - Pune 411 026 - India
Phone: +91 20 3068 8304

Amphenol PCD CO. LTD
Building 21, 1st Liao Keng Industrial Zone, Shi Yan Street
Bao An District, Shenzhen 518108
China
Phone: +86 755 8173 8000/8286

Amphenol Japan
471-1, Deba, Ritto-City, Shiga 520 3041 - Japan
Phone: +81 77 553 8501

Amphenol Sales contacts in North America

Amphenol PCD
72 Cherry Hill Drive - Beverly, MA. 01915 - USA
Phone: +1 978 624 3400

Amphenol Fiber System Int.
1300 Central Expwy N, Suite 100
Allen, TX 75013 - USA
Phone: +1 214 547 2400

Amphenol Aerospace Operations
40-60 Delaware street - Sidney, NY 13838-1395 - USA
Phone: +1 607 563 5011

Amphenol Backplane Systems
18 Celina avenue - Nashua, NH 03063 - USA
Phone: +1 603 883 5100

Amphenol Canada Corporation
605 Milner avenue - Toronto, Ontario - Canada - M1B 5X6
Phone: +1 416 291 4401

Amphenol Sales contacts in Other Areas

Amphenol Argentina
Av. Callao 930 2do piso Oficina B "Plaza" C1023 - AAP
Buenos Aires - Argentina
Phone: +54 11 4815 6886

Amphenol Australia Pty Limited
2 Fiveways Blvd., Keysborough - Melbourne
Victoria 3173- Australia
Phone: +61 3 8796 8888

Amphenol Do Brazil
Rua Diogo Moreira, 132, 20 andar, rooms 2001-2-3
CEP: 05423-010 Sao Paulo SP - Brazil
Phone: +55 11 3815 1003

Bar-Tec Ltd., ISRAEL
3 Hagavish Street, K fir-Barkan Bldg. East Industrial Zone - Kfar-Sava, 44102 - Israel
Phone: +972 9 764 4100

Amphenol Mexico
Prolongacion Reforma 61-6 B2
Col Paseo de las Lomas - C.P. 013130 Mexico
Phone: +52 55 5258 9984

Amphenol Russia
Yaroslavskaja Street 8,
129164 Moscow - Russia
Phone: +7 495 937 6341

Amphenol Africa
30 Impala Rd,
Sandton 2146, South Africa
Tel: +27 82 410 5179

Amphenol TURKEY
Sun Plaza 15 Kat: 15 Maslak Hah. Bilim Sok. No.5
Sisli/Istanbul, 34398 - Turkey
Phone: +90 212 367 92 19

www.amphenol-socapex.com

For Technical Support, please contact us:
+33 (0)4 50 89 28 49
www.amphenol-socapex.com/technical_support

The information given in this document are as a guideline only.
We reserve the right to modify our products in any way we deem necessary.
Any duplication is prohibited, unless approved in writing.
Designed by **Amphenol Socapex** - ***December 2013***

Your local Contact:

DOC-000075-ANG

For more information, please visit our websites:
www.rjfield.com - www.usbfield.com - www.fwfield.com - www.rjswitch.com

Mouser Electronics

Authorized Distributor

Click to View Pricing, Inventory, Delivery & Lifecycle Information:

Amphenol:

RJF21GSCC RJFTV21RAG RJFTVC7MG KIT38204 USBFTVX2SA2G03OPEN USBFTVX7SA2G05OPEN USBFTVX7SA2G20A USBFTVX2SA2G10OPEN USBFTVX7SA2N10A USBFTVX2SA2G10A USBFTVX2SA2G05OPEN USBFTVX7SA2N10OPEN USBFTVX2SA2G15OPEN USBFTVX7SA2N15OPEN USBFTVX2SA2N10OPEN USBFTVX7SA2G15A USBFTVX2SA2G03A USBFTVX2SA2G15A USBFTVX2SA2N03A USBFTVX2SA2N15A USBFTVX7SA2N03OPEN USBFTVX7SA2G03OPEN USBFTVX2SA2N05OPEN USBFTVX7SA2G15OPEN USBFTVX7SA2N20A USBFTVX7SA2G10A USBFTVX2SA2G20A USBFTVX7SA2N15A USBFTVX2SA2N20A USBFTVX2SA2N10A USBFTVX7SA2G10OPEN USBFTVX7SA2N05OPEN USBFTVX2SA2N15OPEN USBBFTV2S2N05A RJF2PEM2N00 RJFTV2SC1G USBBFTV2S2G10A USBBFTV2S2G05OPEN USBBFTV7S2G05A USBBFTV2S2G03A USBBFTV7S2N03OPEN USBFTV2SA2G03OPEN USBBFTV7S2G03OPEN USBBFTV7S2N03A RJF21RANSCC USBFTV2SA2G03A USBBFTV7S2G03A USB3FTV2APEN USBBFTV2S2G03OPEN USBFTV25GF459 USBBFTV7S2G10A USBFTV2SA2N03A USBFTVKEY6A4096G USB3FTV2APEG USBBFTV2S2G05A USBFTV2SA2N03OPEN RJF SFTP 5E 0500 RJ11FTVX7SA1G USBBFTV7S2G05OPEN USBBFTV2S2N03A KIT38082NI USB3FTV7APEG KIT40245G USBBFTV7S2N05A USBFTV2SA2G10A USBBFTV2S2G10OPEN USBBFTV7S2N05OPEN USBBFTV2S2N03OPEN USB3FTV7APEN RJ11FTVX2SA1N USBBFTV2S2N05OPEN 35655 USBFTV2SA2N05A RJ11FTVX6N KIT38073