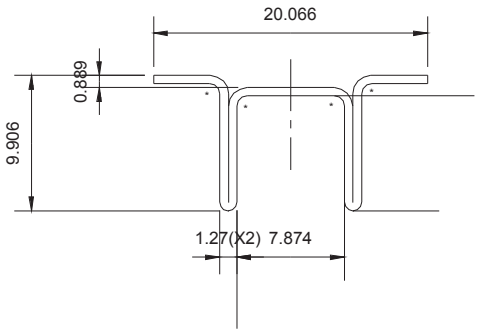

Features :
- thermal resistance 25K/W
- solderable surface
- excellent heat conductivity
- packing tape reel or bulk
- material copper, 0.6mm
- surface tin plated

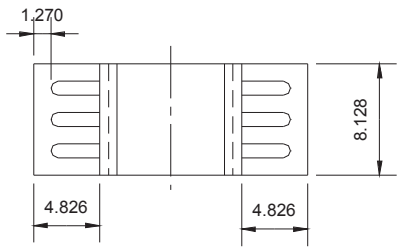

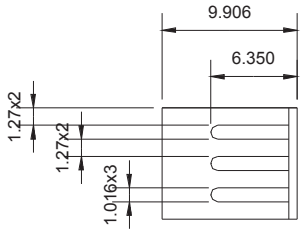

Scale	1:1						Name	Item No. V-1100-SMD/B
TOLERANCE					Drawn	07/13/12	Miller	
X.X	±0.40				Approved	07/13/12	Warner	Title Heat Sink
X.XX	±0.25							
X.XXX	±0.15							Drawing No. rev00
Angle	±3°							
			Modification	Date	Name			Replace / Sheet

RoHS Complaint

ASSMANN WSW components