MICRO SWITCH
FREEPORT ILLINOIS
A DIVISION OF HONEYWELL
FED. MFG. CODE 91929

SWITCH-BASIC

CATALOG LISTING
V3-1002

MILITARY STDS PART NO.
MS 25253-3

CK-L0200

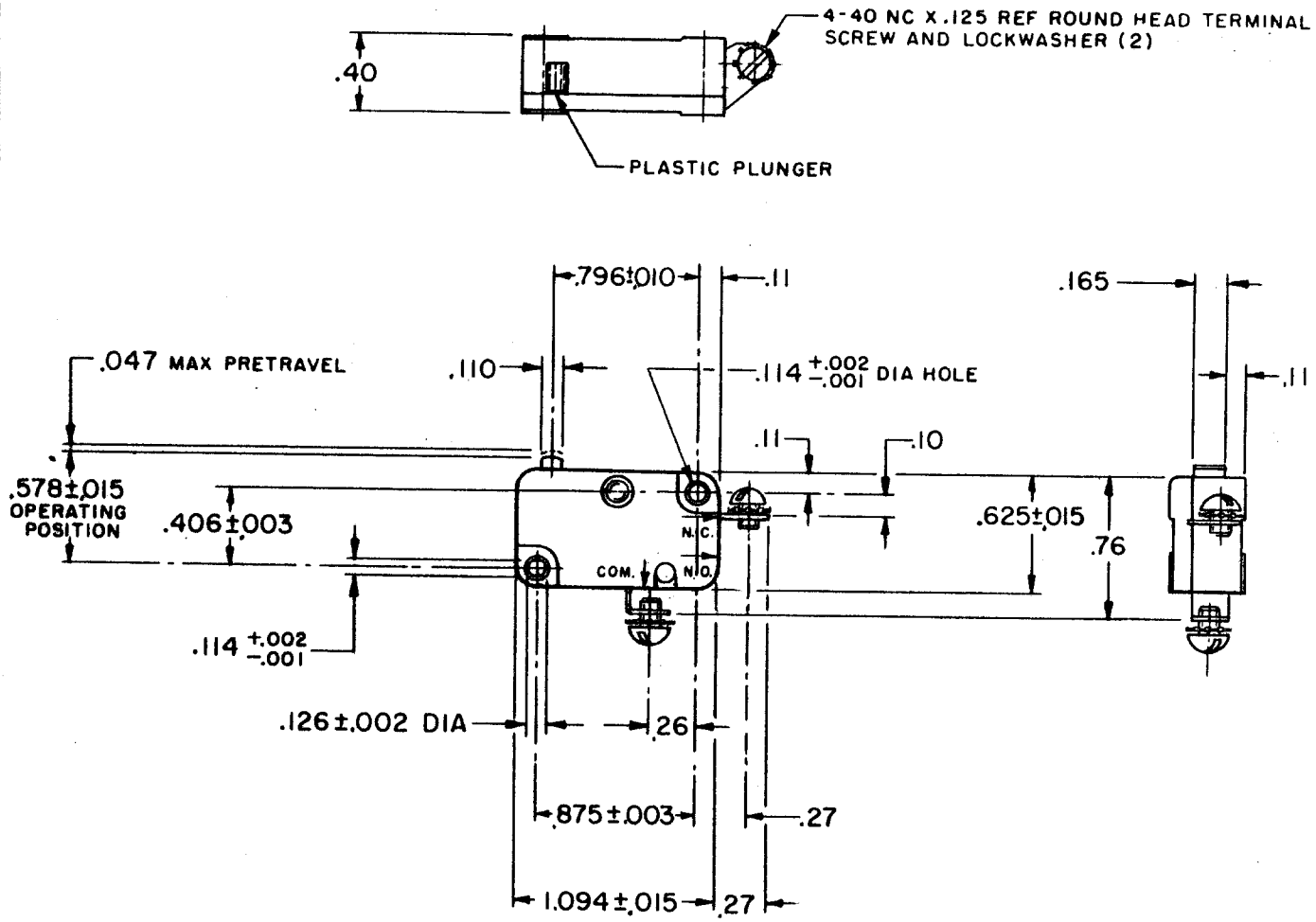

NOTES
1 - MARK "MS-25253-3" AND SOURCE CODE "91929" ON SWITCH AND LABEL OF PACKING BOX
2 - MARK SWITCH WITH CATALOG LISTING AND DATE CODE

THIS DRAWING COVERS A PROPRIETARY ITEM AND IS THE PROPERTY OF MICRO SWITCH, A DIVISION OF MINNEAPOLIS-HONEYWELL REGULATOR CO. THIS DRAWING IS NOT TO BE COPIED OR USED WITHOUT THE APPROVAL OF MICRO SWITCH.

CHARACTERISTICS

OPERATING FORCE — — — — — — 6-14 OZ
RELEASE FORCE — — — — — — 4 OZ MIN
DIFFERENTIAL TRAVEL — — — .006-.016
OVERTRAVEL — — — — — — — — — .040 MIN
FREE POSITION — — — — — — — .625 MAX
RELEASE TRAVEL — — — — — — — — — .010 MIN

ELECTRICAL DATA

CONTACT ARRANGEMENT
S P N C

SCALE FULL
DO NOT SCALE PRINT

UNLESS OTHERWISE SPECIFIED
DIMENSIONS ARE IN INCHES
TOLERANCES ARE:

ONE PLACE	(.0)	±.030
TWO PLACE	(.00)	±.015
THREE PLACE	(.000)	±.005
ANGLES		±

WEIGHT 8.3 GRAMS

V3-1002 | M | DRAWING NUMBER | ISSUE X X X X X X X X

REPLACES
RELEASE NO. SR 10661

REVISIONS

A	CO 20189	M B F 1 JULY 65	
B	C021900	L E B 15 AUG 67	7 DEC 62
C	C024941	M B S 3 DEC 68	BRT
D	C026075	M B S 27 AUG 69	CHECK
E	C026943	S R H 12 FEB 70	
F	CO 39182	G A S 18 FEB 78	7 DEC 62
G	C045436	D J W 31 JAN 79	
H	CO 76499	D C S 6 JAN 94	DAW
J	CO 78754	D C S 23 SEP 94	CHECK

DRAWN L M H 6 DEC 62

FO-50378

Downloaded from Elcodis.com electronic components distributor